CITY OF SHERMAN
CITY COUNCIL REGULAR MEETING AGENDA
COUNCIL CHAMBERS OF THE CITY HALL
220 WEST MULBERRY STREET
SHERMAN, TEXAS
MONDAY, APRIL 15, 2024
4:00 PM

A.1. CALL TO ORDER, QUORUM DETERMINED, MEETING DECLARED OPEN

A.2. PLEDGE OF ALLEGIANCE AND INVOCATION LED BY COUNCIL MEMBER HENRY MARROQUIN

A.3. APPROVE MINUTES OF THE REGULAR CITY COUNCIL MEETING OF APRIL 1, 2024.

Citizen Comments

B.1. CITIZEN COMMENTS

During this meeting, the City Council welcomes public comment only on agenda items listed under the Open Meeting portion of the agenda, in accordance with Texas Government Code Section 551.007. For items not listed on the agenda, those matters may be discussed with City staff during regular business hours, or with the Mayor or any Council member by contacting them at times other than at City Council meetings.

Consent Agenda

C.1. CONSENT AGENDA

Asterisked (*) items are considered to be routine and will be enacted in one motion without discussion unless a Council Member or a citizen requests a specific item be discussed and voted on separately

Special Presentations

D.1. SPECIAL PRESENTATION

Recognizing Jeff Rigdon

Proclamations

E.1. PROCLAMATION

"Brigadier General John A. Hilger Doolittle Raiders Day" - April 18, 2024

E.2. PROCLAMATION

"Sherman Service League - 70th Year of Service" - April 2024

Public Hearing

F.1. INTRODUCTION AND PUBLIC HEARING OF ORDINANCE NO. 6710

Amending Sherman's Zoning Ordinance/Code Of Ordinances Chapter 14, To Rezone A Tract Of Land Consisting Of 0.103 acres being a part of the J.B. McAnair Survey, Abstract No. 763, City Of Sherman, Grayson County, Texas, Located At 310 East Brockett Street, Heretofore Zoned R-6 (Single Family Residential) District; Rezoning And Placing The Tract In The R-4 (Single Family Residential) District Zoning Classification, Zach Adlof (Owner), Rodney Martinez, Centro Resources, LLC (Representative) and Burns

Any item on this posted agenda may be discussed in Executive Session provided it is within one of the permitted categories under Chapter 551 of the Texas Government Code

Surveying (Surveyor) Providing For A Penalty Not To Exceed $2,000.00; Providing A Repealing/Savings Clause, Severability Clause And An Effective Date

F.2. **INTRODUCTION AND PUBLIC HEARING OF ORDINANCE NO. 6711**

Amending Sherman's Zoning Ordinance/Code Of Ordinances Chapter 14, To Rezone A Tract Of Land, Tract 1, Consisting Of 42.205 Acres In The S.C. Inman Survey, Abstract 621 And The T. Shannon Survey, Abstract No. 1136, City Of Sherman, Grayson County, Texas, Located In The 2700 Block Blue Flame Road And 5100 Block Fallon Drive, Heretofore Zoned R-6 (Single Family Residential) District; Rezoning And Placing The Tract In The R-TH (Townhome Residential) District, Pilot Point Land Partners, LLC (Owner), Nathan Parrott, Pape-Dawson Engineers (Representative) and Pape-Dawson Engineers (Engineer/Surveyor) Providing For A Penalty Not To Exceed $2,000.00; Providing A Repealing/Savings Clause, Severability Clause And An Effective Date

F.3. **INTRODUCTION AND PUBLIC HEARING OF ORDINANCE NO. 6712**

An Ordinance Of The City Council Of The City Of Sherman, Texas, Amending The Code Of Ordinances Of The City Of Sherman, Texas, Chapter 14 (Zoning Ordinance), Section 14.02.010 (R-TH Townhome Residential District), Section 14.02.012 (MF-30 Multifamily Residential District), Article 14.07 (Signs), Section 14.08.001 (Definitions), Article 14.10 (Use Chart); Modifying Certain Existing Regulations And Prescribing New Regulations Relating To Townhome And Multifamily Building Separation, Multifamily and Single-Family Sign Regulations, And Changes to the Use Chart Regarding Billboards and Travel Trailer Parks; Providing A Penalty Clause With A Maximum Fine Of $2,000, Savings/Repealing Clause, Severability Clause And An Effective Date; Providing For The Publication Of The Caption Hereof

F.4. **INTRODUCTION AND PUBLIC HEARING OF ORDINANCE NO. 6713**

Amending The Code Of Ordinances Of The City Of Sherman, Texas, Chapter 14 (Zoning Ordinance), Section 14.03.007 (Blalock Commercial Overlay District); Modifying Certain Existing Regulations And Prescribing New Regulations Relating To The Blalock Commercial Overlay District And Expanding The Blalock Commercial Overlay District Boundaries; Providing A Penalty Clause With A Maximum Fine Of $2,000, Savings/Repealing Clause, Severability Clause And An Effective Date; Providing For The Publication Of The Caption Hereof;

Close Public Hearing and Consider Adoption of Ordinances

G.1. **CLOSE PUBLIC HEARING**

Consider Adoption of Ordinance Numbers 6710, 6711, 6712 & 6713.

Resolutions

H.1. **RESOLUTION NO 7281**

Authorizing Execution of an Economic Development Program and Agreement with Broadstone HHH Texas LLC for the Grant of Incentives Pursuant to Chapter 380 of the Texas Local Government Code for Real Property Improvements.

H.2. **RESOLUTION NO. 7282**

Approving the Greater Texoma Utility Authority's Intention to Amend Contract Language to Article 8, Contingency Funds, to Kiewit Water Facilities South Co.

H.3. **RESOLUTION NO. 7283**

Authorizing Execution of a Development Agreement Between the City of Sherman and AJH Enterprises, Ltd. for Certain Drainage Improvements within an Approximate 96.263-Acres Tract of Land Generally Located at the Corner of U.S. Highway 82 and Rex Cruise Road

H.4. **** RESOLUTION NO. 7284***

Any item on this posted agenda may be discussed in Executive Session provided it is within one of the permitted categories under Chapter 551 of the Texas Government Code

Authorizing Execution of Amendment No. 2 to the Professional Services Agreement with Freese and Nichols, Inc. for Design of the Northwest and Southwest Transmission Pipeline

H.5. **** RESOLUTION NO. 7285***
Approving the Greater Texoma Utility Authority's Intention to Approve Amendment No. 6 to Kiewit Water Facilities South CO. for the South Wastewater Treatment Plant

H.6. **** RESOLUTION NO. 7286***
Approving the Greater Texoma Utility Authority's Intention to Award the Sherman WTP - LAS and Rapid Mix Improvements Project

H.7. **** RESOLUTION NO. 7287***
Authorizing Execution of a Professional Services Agreement with Wade Trim, Inc. for the Wells Street Extension

H.8. **** RESOLUTION NO. 7288***
Authorizing Execution of Amendment No. 3 to the Professional Services Agreement with GEOTEX Engineering, LLC for the Annual Geotechnical Engineering and Construction Materials Testing

H.9. **** RESOLUTION NO 7289***
Authorizing the Purchase of a new 12'x40' Manufactured Office Building from Palomar Modular Buildings for the Distribution Services Department through the Texas Local Government Purchasing Cooperative (BuyBoard).

H.10. ****RESOLUTION NO. 7290***
Authorizing the Purchase and Installation of Lighting at Binkley Park Asphalt Pump Track from NEMA 3 Electric, Inc. under the Buy Board Purchasing Cooperative

H.11. **** RESOLUTION NO. 7291***
Authorizing Execution of a Third Payment of Funds Under the City of Sherman's Downtown Building Improvement Grant Program for Renovations to 213 Travis Street to David Downtain, D/B/A RP Sherman Properties II, LLC

H.12. **** RESOLUTION NO. 7292***
Authorizing Execution of a Third Payment of Funds Under the City of Sherman's Downtown Building Improvement grant Program for the Renovations to 219 W. Houston Street to David Downtain, D/B/A RP Sherman Properties II, LLC

H.13. **** RESOLUTION NO. 7293***
Awarding a Bid to and Authorizing Execution of a Contract with North Texas Winwater Co. for the Annual Supply of Water and Sewer Maintenance Parts and Supplies

Other Business

I.1. **OTHER BUSINESS**
Receive Quarterly Progress Report from Sherman Economic Development Corporation President Kent Sharp

I.2. **OTHER BUSINESS**
Receive Presentation on the "Trolley Problem"

I.3. ****OTHER BUSINESS***

Any item on this posted agenda may be discussed in Executive Session provided it is within one of the permitted categories under Chapter 551 of the Texas Government Code

Approve Investment Report for Quarter Ended March 31, 2024

COUNCIL COMMENTS

EXECUTIVE SESSION

In accordance with the Texas Open Meetings Act, Chapter 551 of the Texas Government Code, the City Council may hold an Executive Session if the discussion of any of the items identified in this agenda, or any of the items identified below, concern one or more of the following:

K.1. **TEX. GOV'T CODE § 551.071**

Seeking the advice of its attorney about pending or contemplated litigation, settlement offers or any matter in which the duty of the attorney to the City Council under the Texas Disciplinary Rules of Professional Conduct of the State Bar of Texas clearly conflicts with the Texas Open Meetings Act.

K.2. **TEX. GOV.'T CODE § 551.072**

Deliberating the purchase, exchange, lease or value of real property if deliberation in an Open Meeting would have a detrimental effect on the position of the City in negotiations with a third person.

K.3. **TEX. GOV'T CODE § 551.073**

Deliberating a negotiated contract for a prospective gift or donation to the City if deliberation in an Open Meeting would have a detrimental effect on the position of the City in negotiations with a third person.

K.4. **TEX. GOV'T CODE § 551.074**

Deliberating the appointment, employment, evaluation, reassignment, duties, discipline or dismissal of a public officer or employee; or to hear a complaint or charge against an officer or employee unless the officer or employee who is the subject of the deliberation or hearing requests a public hearing

K.5. **TEX. GOV'T CODE § 551.076**

Deliberating the deployment, or specific occasions for implementation, of security personnel or devices or a security audit.

K.6. **TEX. GOV'T CODE § 551.087**

Discussing or deliberating commercial or financial information that the City has received from a business prospect that the City seeks to have locate, stay or expand in or near the City and with which the City is conducting economic development negotiations; or deliberating the offer of a financial or other incentive to a business prospect.

a) Bel Air Development

b) Hospital Project

c) Crossroads Development

d) BM Project

K.7. **TEX. GOV'T CODE § 551.089**

Deliberating security assessments or deployments relating to information resources technology, network security information, or the deployment or specific occasions for implementation of security personnel, critical infrastructure or security devices.

Any item on this posted agenda may be discussed in Executive Session provided it is within one of the permitted categories under Chapter 551 of the Texas Government Code

The Council reconvenes into General Session

COUNCIL CALENDAR

M.1. COUNCIL CALENDAR
2024 Council Calendar

CERTIFICATION

I, the undersigned authority, do hereby certify that the above Notice of Regular Meeting of the City Council of the City of Sherman is a true and correct copy of said Notice and that I posted a true and correct copy of said Notice on the bulletin board at City Hall of said City of Sherman, Texas, a place convenient to the public, and said notice was posted on Friday, April 12, 2024, at 3:59 p.m., and said time of posting was 72 hours before said meeting was convened or called to order.

Dated this 12th day of April. City of Sherman, Texas

_____
City Clerk

The above agenda schedule represents an estimate of the order for the indicated items and is subject to change at any time. All agenda items are subject to final action by the City Council.

An unscheduled closed executive session may be held if the discussion of any of the above agenda items concerns the purchase, exchange, lease or value of real property; the appointment, employment, evaluation, reassignment, duties, discipline or dismissal of a public officer or employee; the deployment or use of security personnel or equipment; or requires consultations with the City Attorney.

At the discretion of the City Council, non-agenda items under the headings of "Citizens Requests", "Media Questions", and "Council Concerns" may be presented to the Council for informational purposes; however, by law, the Council shall not discuss, deliberate, or vote upon such matters except that a statement of specific factual information, a recitation of existing policy, and deliberations concerning the placing of the subject on a subsequent agenda may take place.

The City Attorney has approved the Executive Session items on this agenda

PERSONS WITH DISABILITIES, WHO PLAN TO ATTEND THIS MEETING AND WHO MAY NEED ASSISTANCE, ARE REQUESTED TO CONTACT LINDA ASHBY AT (903) 892-7204, TWO (2) WORKING DAYS PRIOR TO THE MEETING SO THAT APPROPRIATE ARRANGEMENTS CAN BE MADE.

Mayor	Deputy Mayor	Council Members	
David Plyler	Shawn C. Teamann	Henry Marroquin, Council-At-Large, PL #1	Josh Stevenson, Council – District #2
		Juston Dobbs, Council-At-Large, PL #2	Pamela L. Howeth, Council – District #3
		Shawn C. Teamann, Council – District #1	Daron Holland, Council – District #4

Any item on this posted agenda may be discussed in Executive Session provided it is within one of the permitted categories under Chapter 551 of the Texas Government Code

STATE OF TEXAS §

April 1, 2024

COUNTY OF GRAYSON §

BE IT REMEMBERED THAT A Regular Meeting of the City Council of the City of Sherman, Grayson County, Texas was begun and held in the Council Chambers of City Hall on April 1, 2024.

MEMBERS PRESENT: **MAYOR DAVID PLYLER; DEPUTY MAYOR SHAWN TEAMANN. COUNCIL MEMBERS DOBBS, HOWETH, MARROQUIN, STEVENSON.**

MEMBERS ABSENT: **COUNCIL MEMBER HOLLAND.**

CALL TO ORDER — **CALL TO ORDER**

Mayor Plyler called the meeting to order at 5:00 p.m. The Pledge of Allegiance and Invocation were led by Council Member Josh Stevenson.

APPROVE MINUTES — **APPROVE MINUTES**

The Council reviewed the Minutes of the Regular City Council Meeting of March 18, 2024. Council Member Howeth moved to approve the Minutes, as presented; Second by Deputy Mayor Teamann; All present voted AYE.
MOTION CARRIED.

CITIZEN'S COMMENTS — **CITIZEN'S COMMENTS**

There were no citizen's comments.

CONSENT AGENDA — **CONSENT AGENDA**

Asterisked (*) items are considered to be routine and will be enacted in one motion without discussion unless a Council Member or a citizen requests a specific item be discussed and voted on separately.

Mayor Plyler removed Item F-7, entitled "Resolution No. 7230' concerning the purchase of Dell Storage Solution; and Items H-3 and H-4, concerning petitions to remove property from Sherman's Extraterritorial Jurisdiction, from the Consent Agenda, for consideration in their regular order of business.

The Council reviewed the Consent Agenda. Deputy Mayor Teamann moved to approve the Consent Agenda, with the exception of Items F-7, H-3, and H-4, which will be considered in their regular order of business. Second by Council Member Stevenson. All present voted AYE.

Mayor Plyler introduced Ordinance No. 6709 and called for a public hearing: — **ORD 6709 UTILITY RATES**

AN ORDINANCE OF THE CITY COUNCIL OF THE CITY OF SHERMAN, TEXAS, AMENDING CHAPTER 13 OF THE CODE OF ORDINANCES, ENTITLED "UTILITIES", ARTICLE 13.08, ENTITLED "UTILITY BILLING", AT SECTION 13.08.005 REVISING RATES FOR WATER SERVICES; PROVIDING A SAVINGS/REPEALING CLAUSE,

SEVERABILITY CLAUSE AND AN EFFECTIVE DATE; PROVIDING FOR THE PUBLICATION OF THE CAPTION HEREOF.

Mary Lawrence, Chief Financial Officer, said the current ordinance does not include charges for a 12" meter. That size meter has been requested by a large industrial user that is currently building a plant south of Sherman.

No citizens appeared before the City Council to discuss Ordinance No. 6709.

The Public Hearing was closed.

Ordinance 6709 — **ORD 6709 UTILITY RATES**

AN ORDINANCE OF THE CITY COUNCIL OF THE CITY OF SHERMAN, TEXAS, AMENDING CHAPTER 13 OF THE CODE OF ORDINANCES, ENTITLED "UTILITIES", ARTICLE 13.08, ENTITLED "UTILITY BILLING", AT SECTION 13.08.005 REVISING RATES FOR WATER SERVICES; PROVIDING A SAVINGS/REPEALING CLAUSE, SEVERABILITY CLAUSE AND AN EFFECTIVE DATE; PROVIDING FOR THE PUBLICATION OF THE CAPTION HEREOF.

Council Member Stevenson confirmed that the water rates are based on the volume that can be pushed through a 12" meter.

ACTION TAKEN.

Motion by Deputy Mayor Teamann to approve Ordinance No. 6709, as presented. Second by Council Member Dobbs.

VOTING AYE: Dobbs, Howeth, Marroquin, Stevenson, Teamann.
VOTING NAY: None.
MOTION CARRIED.

RESOLUTION NO. 7274 -- OPPOSING AIR QUALITY PERMIT 167047, PREVENTING OF SIGNIFICANT DETERIORATION (PSD) PERMIT PSDTX1602, GREENHOUSE GAS PREVENTION OF SIGNIFICANT DETERIORATION (GHGPSD) PERMIT GHGPSDTX212, AND ALL OTHER PERMITS SUBMITTED TO THE TEXAS COMMISSION ON ENVIRONMENTAL QUALITY AND OTHER GOVERNMENTAL AGENCIES BY BM DORCHESTER, LLC REGARDING THE CONSTRUCTION OF THE PROPOSED DORCHESTER CEMENT PRODUCTION PLANT (PRECALCINER KILN AND ASSOCIATED EQUIPMENT FACILITY) AND OPERATION OF PERMANENT ROCK AND CONCRETE CRUSHER (QUARRY) AT A SITE EAST OF THE HIGHWAY 289 AND FM 902 INTERSECTION APPROXIMATELY .80 MILES, DIRECTLY NORTH OF FM 902 AFTER THE TAYLOR ROAD INTERSECTION; RECOGNIZING THE PUBLIC HEALTH, SAFETY, AND WELFARE IMPLICATIONS OF THE PROPOSED OPERATION; AND URGING THOROUGH REVIEW OF SAID APPLICATIONS — **RES 7274 OPPOSING BM DORCHESTER CEMENT PLANT**

A RESOLUTION OF THE CITY COUNCIL OF THE CITY OF SHERMAN, TEXAS, OPPOSING AIR QUALITY PERMIT 167047, PREVENTION OF SIGNIFICANT DETERIORATION (PSD) PERMIT PSDTX1602, GREENHOUSE GAS PREVENTION OF SIGNIFICANT DETERIORATION (GHGPSD) PERMIT GHGPSDTX212, AND ALL OTHER PERMITS SUBMITTED TO THE TEXAS COMMISSION ON ENVIRONMENTAL QUALITY AND OTHER GOVERNMENTAL

AGENCIES BY BM DORCHESTER, LLC, REGARDING THE CONSTRUCTION OF THE PROPOSED DORCHESTER CEMENT PRODUCTION PLANT (PRECALCINER KILN AND ASSOCIATED EQUIPMENT FACILITY) AND OPERATION OF PERMANENT ROCK AND CONCRETE CRUSHERS (QUARRY) AT A SITE EAST OF THE HIGHWAY 289 AND FM 902 INTERSECTION APPROXIMATELY .80 MILES, DIRECTLY NORTH OF FM 902 AFTER THE TAYLOR ROAD INTERSECTION; RECOGNIZING THE PUBLIC HEALTH, SAFETY, AND WELFARE IMPLICATIONS OF THE PROPOSED OPERATION; AND URGING THOROUGH REVIEW OF SAID APPLICATIONS.

Ryan Pittman, City Attorney, explained that, if approved, the proposed rock crushing/cement production plant would be located partially in Sherman's Extraterritorial Jurisdiction, and partially in Dorchester's ETJ. There is currently a comment period before the Texas Commission on Environmental Quality.

Mayor Plyler said the City is opposing the location of this plant because of prevailing winds that would bring particulate matter over the High School and the business park. The City is opposing this plant on all levels to protect the citizens and the investments in Sherman's economy.

ACTION TAKEN.

Motion by Council Member Stevenson to approve Resolution No. 7274, as presented. Second by Deputy Mayor Teamann.

VOTING AYE: Plyler, Dobbs, Howeth, Marroquin, Stevenson, Teamann.
VOTING NAY: None.
MOTION CARRIED.

RES 7275 DOWNTOWN WASTEWATER IMPROVEMENTS PHASE 1

RESOLUTION NO. 7275 -- AWARDING A BID TO AND AUTHORIZING EXECUTION OF A CONTRACT BETWEEN ANA SITE CONSTRUCTION AND THE GREATER TEXOMA UTILITY AUTHORITY BASED ON AN INVITATION TO BID FOR THE SHERMAN DOWNTOWN WASTEWATER IMPROVEMENTS, PHASE 1

A RESOLUTION OF THE CITY COUNCIL OF THE CITY OF SHERMAN, TEXAS, AWARDING A BID TO AND AUTHORIZING EXECUTION OF A CONTRACT BETWEEN ANA SITE CONSTRUCTION AND THE GREATER TEXOMA UTILITY AUTHORITY BASED ON AN INVITATION TO BID FOR THE SHERMAN DOWNTOWN WASTEWATER IMPROVEMENTS, PHASE 1.

Travis Overturf, Civil Engineer, said this project was a result of the Downtown Wastewater Evaluation Study, and will replace 6,400' of sewer main throughout the downtown area.

Cost of the project is $2,482,383, and includes a $300,000 contingency. The project should begin late April or early May, and be complete by late winter. They will also work to coordinate with the downtown events.

ACTION TAKEN.
Motion by Council Member Howeth to approve Resolution No. 7275, as presented. Second by Council Member Dobbs.
VOTING AYE: Dobbs, Howeth, Marroquin, Stevenson, Teamann.
VOTING NAY: None.
MOTION CARRIED.

RESOLUTION NO. 7276 -- AUTHORIZING EXECUTION OF A PROFESSIONAL SERVICES AGREEMENT WITH HALFF ASSOCIATES, INC. FOR DESIGN OF THE CITY OF SHERMAN SOUTHWEST TRAIL

RES 7276 SHERMAN SOUTHWEST TRAIL DESIGN

A RESOLUTION OF THE CITY COUNCIL OF THE CITY OF SHERMAN, TEXAS, AUTHORIZING EXECUTION OF A PROFESSIONAL SERVICES AGREEMENT WITH HALFF ASSOCIATES, INC. FOR THE CITY OF SHERMAN SOUTHWEST TRAIL.
CONSENT AGENDA.

RESOLUTION NO. 7277 -- AWARDING A BID TO AND AUTHORIZING EXECUTION OF A CONTRACT WITH GLENN POLK AUTOPLEX, INC. FOR THE PURCHASE OF THREE NEW DODGE RAM AMBULANCE CHASSIS FOR THE SHERMAN FIRE DEPARTMENT

RES 7277 AMBULANCE CHASSIS

A RESOLUTION OF THE CITY COUNCIL OF THE CITY OF SHERMAN, TEXAS, AWARDING A BID TO AND AUTHORIZING EXECUTION OF A CONTRACT WITH GLENN POLK AUTOPLEX, INC. FOR THE PURCHASE OF THREE NEW DODGE RAM AMBULANCE CHASSIS FOR THE SHERMAN FIRE DEPARTMENT.
CONSENT AGENDA.

RESOLUTION NO. 7278 -- AUTHORIZING EXECUTION OF A PROFESSIONAL SERVICES AGREEMENT WITH HUITT-ZOLLARS, INC, FOR EROSION EVALUATION AND DESIGN AT WEST HILL CEMETERY

RES 7278 WEST HILL CEMETERY DESIGN

A RESOLUTION OF THE CITY COUNCIL OF THE CITY OF SHERMAN, TEXAS, AUTHORIZING EXECUTION OF A PROFESSIONAL SERVICES AGREEMENT WITH HUITT-ZOLLARS, INC. FOR EROSION EVALUATION AND DESIGN AT WEST HILL CEMETERY.
CONSENT AGENDA.

RESOLUTION NO. 7279 -- AUTHORIZING THE PURCHASE OF RUBRIK BACKUP HARDWARE AND SUBSCRIPTION FOR DATA PROTECTION, BACKUP, AND RECOVERY OF INFORMATION SYSTEMS THROUGH CDW-G UNDER THE TXDIR - RUBRIK CARAHSOFT DIR-CPO-4444 (DIR-CPO-4444)

RES 7279 BACKUP HARDWARE PROTECTION

A RESOLUTION OF THE CITY COUNCIL OF THE CITY OF SHERMAN, TEXAS, AUTHORIZING THE PURCHASE OF RUBRIK BACKUP HARDWARE AND SUBSCRIPTION FOR DATA PROTECTION, BACKUP, AND RECOVERY OF INFORMATION SYSTEMS THROUGH CDW-G UNDER THE TXDIR - RUBRIK CARAHSOFT DIR-CPO-4444 (DIR-CPO-4444).
CONSENT AGENDA.

RES 7280
DELL STORAGE
SOLUTION

This item was removed from Consent Agenda to correct the Resolution Number. It should be Resolution 7280.

RESOLUTION NO. 7280 -- AUTHORIZING THE PURCHASE OF DELL STORAGE SOLUTION THROUGH DELL TECHNOLOGIES UNDER THE NATIONAL COOPERATIVE PURCHASING ALLIANCE (NCPA)

A RESOLUTION OF THE CITY COUNCIL OF THE CITY OF SHERMAN, TEXAS, AUTHORIZING THE PURCHASE OF DELL STORAGE SOLUTION THROUGH DELL TECHNOLOGIES UNDER THE NATIONAL COOPERATIVE PURCHASING ALLIANCE (NCPA).

ACTION TAKEN.

Motion by Council Member Stevenson to approve Resolution No. 7280, as presented. Second by Deputy Mayor Teamann.

VOTING AYE: Dobbs, Howeth, Marroquin, Stevenson, Teamann.
VOTING NAY: None.
MOTION CARRIED.

REQUEST TO ADV
MOWING OF
CITY PROPERTIES

REQUEST TO ADVERTISE
ANNUAL SERVICES FOR FINISH AND ROUGH MOWING OF VARIOUS CITY PROPERTIES

The City Council approved the request to advertise for finish and rough mowing of various City properties.
CONSENT AGENDA.

OTHER BUSINESS
(TABLED AT THE MARCH 18, 2024, REGULAR CITY COUNCIL MEETING)

VARIANCE FOR
ALCOHOL SALES
(1121 W. TAYLOR ST)

CONSIDER REQUEST FOR A VARIANCE TO ALLOW ALCOHOLIC BEVERAGE SALES WITHIN 300 FEET OF A SCHOOL (FAIRVIEW ELEMENTARY); MARK SCHUSTER, OWNER, SHERMAN F&B, LLC, ON PREMISES LOCATED AT FAIRVIEW PARK, 1121 W. TAYLOR STREET, PURSUANT TO SECTION 109.33(E) OF THE TEXAS ALCOHOLIC BEVERAGE CODE

ACTION TAKEN.

Motion by Council Member Stevenson to remove from table for discussion, the Variance to allow alcoholic beverage sales at Fairview Park, 1121 W. Taylor Street, within 300 feet of a school (Fairview Elementary). Second by Deputy Mayor Teamann.

VOTING AYE: Dobbs, Howeth, Marroquin, Stevenson, Teamann.
VOTING NAY: None.
MOTION CARRIED TO REMOVE FROM TABLE.

Mr. Pittman said there are two issues with the requested alcohol variance. The first is the 300' distance from the school, and the second is that the City has a license agreement with a different entity to operate a semi-professional baseball facility at that location.

Tim Woodland, Sherman Sports and Entertainment, LLC, appeared representing the request. He explained that he owns both entities, Sherman Sports & Entertainment, and Sherman F&B. Mark Schuster actually owns the league. For liability purposes, they split the food and beverages portion from the sports entertainment portion. They also added the application for mixed beverages, instead of just beer and wine.

Mr. Pittman said the action tonight is only on the variance. The license that the City has with Sherman Entertainment, provides that any sub-license to another entity, requires written consent from the City. Even though the entities are owned by the same person, it is a different "entity" and would require written permission to operate.

Council Members discussed the sale of mixed alcohol beverages, instead of only beer and wine. Mr. Pittman also discussed the Texas Alcohol Beverage Commission rules, and what the Council would be allowed to regulate. He said they could regulate some details through the contract allowing the entity to sell alcoholic beverages in the park.

ACTION TAKEN.

Motion by Council Member Stevenson to approve the Variance to allow alcoholic beverage sales within 300 feet of Fairview Elementary School, in Fairview Park, at 1121 W. Taylor Street, as presented. Second by Council Member Howeth.

VOTING AYE: Howeth, Marroquin, Stevenson.
VOTING NAY: Dobbs, Teamann.
MOTION CARRIED.

SHERMAN CULTURAL DISTRICT

RECEIVE SEMI-ANNUAL REPORT ON THE SHERMAN CULTURAL DISTRICT

Cary Wacker presented the Annual Report on the Sherman Cultural District. She outlined their various projects, such as the Art Dash and the grant project for the creation of a Black History mural series in Downtown Sherman.

PETITION FOR REMOVAL FROM ETJ

CONSIDER AND ACT ON PETITION FROM FURIZON, LIMITED RELATED TO 312.05 ACRES OF LAND LOCATED IN PART OF THE JAMES McKINNEY SURVEY, ABSTRACT NO. 777 AND A PART OF THE MARY MILLER SURVEY, ABSRACT NO. 775, AS RECORDED IN VOLUME 3697, PAGE 766 OF THE GRAYSON COUNTY PROPERTY RECORDS, GRAYSON COUNTY, TEXAS, A PORTION OF WHICH IS LOCATED WITHIN THE CITY OF SHERMAN'S EXTRATERRITORIAL JURISDICTION ("ETJ")

This item was removed from Consent Agenda for consideration in its regular order of business.

Wayne Lee, Director of Engineering, briefed the Council on a petition that was received from Furizon, Limited, to remove their property from the City's Extraterritorial Jurisdiction. Some of the property is also in the Dorchester City limits. The staff recommends a denial of the request.

ACTION TAKEN.

Motion by Council Member Stevenson to deny the petition submitted by Furizon, Limited, for the release of property from the City's Extraterritorial Jurisdiction, because Senate Bill 2038, Local Government Code, Section 42.104 and Section 42.105 are unconstitutional delegations of legislative authority and in direct irreconcilable conflict with Local Government Code, Section 42.023, and the City has not consented and does

not consent to the release of property from its ETJ or any reduction of the City. Second by Council Member Dobbs.
VOTING AYE: Dobbs, Howeth, Marroquin, Stevenson, Teamann.
VOTING NAY: None.
MOTION CARRIED.

PETITION FOR REMOVAL FROM ETJ

CONSIDER AND ACT ON PETITION FROM RAY C. DAVIS AND LINDA B. DAVIS RELATED TO 44.802 ACRES OF LAND LOCATED IN PART IN THE T.J. SHANNON SURVEY, THE W HOBSON SURVEY AND THE W.G. REYNOLDS SURVEY, AS RECORDED IN VOLUME 4559, PAGE 338 OF THE GRAYSON COUNTY PROPERTY RECORDS, GRAYSON COUNTY, TEXAS, LOCATED WITHIN THE CITY OF SHERMAN'S EXTRATERRITORIAL JURISDICTION ("ETJ")
This item was removed from Consent Agenda for consideration in its regular order of business.

Mr. Lee briefed the Council on a petition that was received from Ray C Davis and Linda B. Davis, to remove their property from the City's Extraterritorial Jurisdiction. The staff recommends a denial of the request.

ACTION TAKEN.
Motion by Council Member Stevenson to deny the petition submitted by Ray C. Davis and Linda B. Davis, for the release of property from the City's Extraterritorial Jurisdiction, because Senate Bill 2038, Local Government Code, Section 42.104 and Section 42.105 are unconstitutional delegations of legislative authority and in direct irreconcilable conflict with Local Government Code, Section 42.023, and the City has not consented and does not consent to the release of property from its ETJ or any reduction of the City. Second by Council Member Dobbs.
VOTING AYE: Dobbs, Howeth, Marroquin, Stevenson, Teamann.
VOTING NAY: None.
MOTION CARRIED.

EMERGENCY SEWER REPAIR (BORDEAUX ST & BURGUNDY LN)

EMERGENCY SEWER REPAIR AT BORDEAUX STREET AND BURGUNDY LANE UNDER EMERGENCY DESIGNATION
The City Council approved the emergency sewer repair at Bordeaux Street and Burgundy Lane, under emergency designation. A section of collapsed sewer main was discovered in a clay main that was originally installed in 1964. The main has exceeded its design life and caused a lot of maintenance issues.
CONSENT AGENDA.

EMERGENCY SEWER REPAIR (505 TO 719 KESSLER BLVD)

EMERGENCY SEWER REPAIR IN THE AREA FROM 505 TO 719 KESSLER BLVD UNDER EMERGENCY DESIGNATION
The City Council approved the emergency sewer repair in the area from 505 to 719 Kessler Boulevard, under emergency designation. A section of collapsed sewer main was discovered in a clay main that was originally installed nearly 75 years ago. The main has exceeded its design life and caused a lot of maintenance issues.
CONSENT AGENDA.

APPOINT/REMOVE OR CONSIDER QUALIFICATIONS TO BOARDS AND COMMISSIONS

ANIMAL CONTROL ADVISORY COMMITTEE (3) — **ANIMAL CONTROL ADVISORY COMMITTEE**

ACTION TAKEN.

Motion by Council Member Stevenson to reappoint Dr. Ken Lawrence to the Animal Control Advisory Committee, for a term from February 2, 2024 to February 2, 2027, reappoint Mignon Plyler, for a term from March 17, 2024 to March 17, 2027, and appoint Janet Karam for a term from April 2, 2024 to April 2, 2027. Second by Council Member Howeth.

VOTING AYE: Dobbs, Howeth, Marroquin, Stevenson, Teamann.
VOTING NAY: None.
MOTION CARRIED.

CITIZEN'S COMMENTS

CLARIFICATION ON AGENDA ITEM — **CLARIFICATION ON AGENDA ITEM**

Peter Tracy, 705 S. Valentine, asked for clarification on Agenda Item F-7. The Agenda states it concerns Resolution 7230, but the City Clerk read the item as Resolution 7280.

Mayor Plyler explained that was why it was removed from the Consent Agenda, so the item number could be corrected.

COUNCIL COMMENTS — **COUNCIL COMMENTS**

- **The mural that was painted at Grand Central Station on Houston Street looks good. (Henry Marroquin)**
- **Invitation to all citizens to attend the Second Annual Cinco de Mayo festival on May 3, 2024, from 6 pm to 10 pm. (Henry Marroquin)**
- **The changes to Downtown during the last few years have been incredible. There are more activities, art work, signs, and revitalization. He thanked Ms. Wacker and the Sherman Cultural District for their hard work. (Shawn Teamann)**
- **Thanks to Mayor Plyler and Kent Sharp, President, Sherman Economic Development Corporation, for their hard work to keep the cement kiln out of Sherman's ETJ. (Shawn Teamann and Josh Stevenson)**

ANNOUNCEMENTS — **ANNOUNCEMENTS**

Mayor Plyler announced the following:

- **Applications for subrecipient funding for the Community Development Block Grant program are open from April 1 through April 30, 2024, on the City's website.**
- **Coffee with the Mayor will be held on April 5, 2024, in the Municipal Ballroom. The Hot Summer Nights line-up for 2024 will be revealed.**
- **The Tourism Office will sponsor "Total Eclipse in the Park" on April 8, beginning at 11:30, in Kidd-Key Park.**

- **Craft the Night Away will be held on May 18, 2024, in Downtown Sherman.**

EXECUTIVE SESSION

EXECUTIVE SESSION – IN ACCORDANCE WITH CHAPTER 551, GOVT. CODE, V.T.C.S., (OPEN MEETINGS LAW)

THE CITY COUNCIL WILL NOW HOLD AN EXECUTIVE SESSION PURSUANT TO THE PROVISIONS OF THE OPEN MEETINGS LAW, CHAPTER 551, GOVERNMENT CODE, VERNONS TEXAS CODES ANNOTATED, IN ACCORDANCE WITH THE AUTHORITY CONTAINED IN THE FOLLOWING SECTIONS.

TEX. GOV'T CODE § 551.071 --
SEEKING THE ADVICE OF ITS ATTORNEY ABOUT PENDING OR CONTEMPLATED LITIGATION, SETTLEMENT OFFERS OR ANY MATTER IN WHICH THE DUTY OF THE ATTORNEY TO THE CITY COUNCIL UNDER THE TEXAS DISCIPLINARY RULES OF PROFESSIONAL CONDUCT OF THE STATE BAR OF TEXAS CLEARLY CONFLICTS WITH THE TEXAS OPEN MEETINGS ACT

TEX. GOV'T CODE § 551.072 --
DELIBERATING THE PURCHASE, EXCHANGE, LEASE OR VALUE OF REAL PROPERTY IF DELIBERATION IN AN OPEN MEETING WOULD HAVE A DETRIMENTAL EFFECT ON THE POSITION OF THE CITY IN NEGOTIATIONS WITH A THIRD PERSON

TEX. GOV'T CODE § 551.073 --
DELIBERATING A NEGOTIATED CONTRACT FOR A PROSPECTIVE GIFT OR DONATION TO THE CITY IF DELIBERATION IN AN OPEN MEETING WOULD HAVE A DETRIMENTAL EFFECT ON THE POSITION OF THE CITY IN NEGOTIATIONS WITH A THIRD PERSON

TEX. GOV'T CODE § 551.074 --
DELIBERATING THE APPOINTMENT, EMPLOYMENT, EVALUATION, REASSIGNMENT, DUTIES, DISCIPLINE OR DISMISSAL OF A PUBLIC OFFICER OR EMPLOYEE; OR TO HEAR A COMPLAINT OR CHARGE AGAINST AN OFFICER OR EMPLOYEE UNLESS THE OFFICER OR EMPLOYEE WHO IS THE SUBJECT OF THE DELIBERATION OR HEARING REQUESTS A PUBLIC HEARING

TEX. GOV'T CODE § 551.076 –
DELIBERATING THE DEPLOYMENT, OR SPECIFIC OCCASIONS FOR IMPLEMENTATION, OF SECURITY PERSONNEL OR DEVICES OR A SECURITY AUDIT

TEX. GOV'T CODE § 551.087 –
DISCUSSING OR DELIBERATING COMMERCIAL OR FINANCIAL INFORMATION THAT THE CITY HAS RECEIVED FROM A BUSINESS PROSPECT THAT THE CITY SEEKS TO HAVE LOCATE, STAY OR EXPAND IN OR NEAR THE CITY AND WITH WHICH THE CITY IS CONDUCTING ECONOMIC DEVELOPMENT NEGOTIATIONS; OR DELIBERATING THE OFFER OF A FINANCIAL OR OTHER INCENTIVE TO A BUSINESS PROSPECT

A) BEL AIR

TEXAS GOV'T CODE § 551.089 --
DELIBERATING SECURITY ASSESSMENTS OR DEPLOYMENTS RELATING TO INFORMATION RESOURCES TECHNOLOGY, NETWORK SECURITY INFORMATION, OR THE DEPLOYMENT OR SPECIFIC OCCASIONS FOR IMPLEMENTATION OF SECURITY PERSONNEL, CRITICAL INFRASTRUCTURE OR SECURITY DEVICES

On Motion duly made and carried, the Open Meeting recessed and reconvened in Executive Session at 5:46 p.m.

On Motion duly made and carried, the Executive Session recessed at 6:19 p.m. and reconvened in Open Meeting.

OPEN MEETING **OPEN MEETING**

Reconvene into Open Meeting and take action, if any, on items discussed in Executive Session.

ADJOURNMENT **ADJOURNMENT**

On Motion duly made and carried, the meeting adjourned at 6:19 p.m.

_____
MAYOR

_____
CITY CLERK

SHERMAN CITY COUNCIL
Agenda Communication Form

City Council Regular Meeting Agenda Item No. C.1.

Meeting Date: 4/15/2024

Prepared By:

Approved By:

Caption:

Asterisked (*) items are considered to be routine and will be enacted in one motion without discussion unless a Council Member or a citizen requests a specific item be discussed and voted on separately

Issue:

H. 4. **** RESOLUTION NO. 7284***
Authorizing Execution of Amendment No. 2 to the Professional Services Agreement with Freese and Nichols, Inc. for Design of the Northwest and Southwest Transmission Pipeline

H. 5. **** RESOLUTION NO. 7285***
Approving the Greater Texoma Utility Authority's Intention to Approve Amendment No. 6 to Kiewit Water Facilities South CO. for the South Wastewater Treatment Plant

H. 6. **** RESOLUTION NO. 7286***
Approving the Greater Texoma Utility Authority's Intention to Award the Sherman WTP - LAS and Rapid Mix Improvements Project

H. 7. **** RESOLUTION NO. 7287***
Authorizing Execution of a Professional Services Agreement with Wade Trim, Inc. for the Wells Street Extension

H. 8. **** RESOLUTION NO. 7288***
Authorizing Execution of Amendment No. 3 to the Professional Services Agreement with GEOTEX Engineering, LLC for the Annual Geotechnical Engineering and Construction Materials Testing

H. 9. **** RESOLUTION NO 7289***
Authorizing the Purchase of a new 12'x40' Manufactured Office Building from Palomar Modular Buildings for the Distribution Services Department through the Texas Local Government Purchasing Cooperative (BuyBoard).

H. 10. ****RESOLUTION NO. 7290***
Authorizing the Purchase and Installation of Lighting at Binkley Park Asphalt Pump Track from NEMA 3 Electric, Inc. under the Buy Board Purchasing Cooperative

H. 11. **** RESOLUTION NO. 7291***
Authorizing Execution of a Third Payment of Funds Under the City of Sherman's Downtown Building Improvement Grant Program for Renovations to 213 Travis Street to David Downtain, D/B/A RP

Sherman Properties II, LLC

H. 12. **** RESOLUTION NO. 7292***

Authorizing Execution of a Third Payment of Funds Under the City of Sherman's Downtown Building Improvement grant Program for the Renovations to 219 W. Houston Street to David Downtain, D/B/A RP Sherman Properties II, LLC

H. 13. **** RESOLUTION NO. 7293***

Awarding a Bid to and Authorizing Execution of a Contract with North Texas Winwater Co. for the Annual Supply of Water and Sewer Maintenance Parts and Supplies

I. 3. ****OTHER BUSINESS***

Approve Investment Report for Quarter Ended March 31, 2024

Background:

Origination:

Financial Consideration:

Staff Recommendation:

Alternatives:

Attachments:
None

SHERMAN CITY COUNCIL
Agenda Communication Form

City Council Regular Meeting Agenda Item No. D.1.

Meeting Date: 4/15/2024

Prepared By: Clint Philpott, Assistant City Manager

Approved By:

Caption:
SPECIAL PRESENTATION
Recognizing Jeff Rigdon

Issue:

Background:

Origination:
Several plant supervisors have been active in the design of the new MBR Plant. Their knowledge as operators has made a huge difference in many value engineering decisions. Tonight we want to recognize Jeff Rigdon for his help in saving close to $4 million dollars in locating systems. He took it upon himself to call many other operators around the country and find out what other plants had and how it performed. This research help make the decision to eliminate about 80% of the coating, saving both time and money.

Financial Consideration:

Staff Recommendation:

Alternatives:

Attachments:
None

SHERMAN CITY COUNCIL
Agenda Communication Form

City Council Regular Meeting Agenda Item No. E.1.

Meeting Date: 4/15/2024

Prepared By: Linda Ashby, City Clerk

Approved By: Robby Hefton, City Manager

Caption:
PROCLAMATION
"Brigadier General John A. Hilger Doolittle Raiders Day" - April 18, 2024

Issue:
The City Council would like to recognize Brigadier General John A. Hilger on the anniversary of one of his famous missions.

Background:
Brigadier General Hilger served as a pilot with the Doolittle Raiders on April 18, 1942, on a mission to attack Tokyo, 132 days after the attack on Pearl Harbor. His awards and decorations include the Silver Star, Legion of Merit (4), Distinguished Flying Cross (2), Bronze Star Medal, Air Medal (3), Asiatic Pacific Campaign Medal with four bronze stars, WWII Victory Medal, Korean Service Campaign Medal with three service stars, and the United Nations Korean Service Medal.

Origination:
The City Council would like to commend Brigadier General John A. Hilger on his illustrious military career.

Financial Consideration:
There is no financial consideration to the City.

Staff Recommendation:
Staff recommendation is to present a proclamation recognizing Brigadier General John A. HIlger.

Alternatives:
The Council could choose not to present the proclamation.

Attachments:
1. Brigadier General John A. Hilger Doolittle Raiders Day Proclamation

Sherman
CLASSIC TOWN. BROAD HORIZON

Proclamation

WHEREAS, Brigadier General John A. "Jack" Hilger graduated from Sherman High School in 1926, and

WHEREAS, General Hilger entered military service in 1932, after graduation from Texas A&M University, and earned his wings as a pilot, and

WHEREAS, General Hilger volunteered for a dangerous and secret mission, and

WHEREAS, General Hilger flew as a pilot of a B-25 bomber that attacked Tokyo, as a member of the Doolittle Raiders, on April 18, 1942, and

WHEREAS, General Hilger's bombing of Tokyo earned him the Distinguished Flying Cross, ".....knowing full well his chances of survival were extremely remote, (he) executed his part of it with great skill and daring", and

WHEREAS, General Hilger continued his outstanding military career in the Korean War, where he earned the Silver Star for a bombing attack less than 700 yards from the Chinese border, and

WHEREAS, General Hilger rose from 2nd Lieutenant to Brigadier General during a 34-year military career.

NOW THEREFORE, I, David Plyler, Mayor of the City of Sherman, Texas, by the authority vested in me, do hereby proclaim April 18, 2024

BRIGADIER GENERAL JOHN A. HILGER
DOOLITTLE RAIDERS DAY

in the City of Sherman, and encourage all citizens to recognize and honor his illustrious military career, and his dedication to his Country and the American citizens.

IN WITNESS WHEREOF, I have hereunto set my hand and caused the seal of the City of Sherman to be affixed this the 15th day of April, 2024.

_____
Mayor

ATTEST:

Linda Ashby
City Clerk

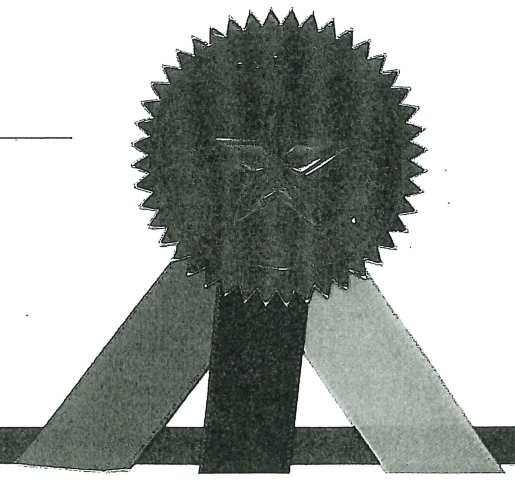

SHERMAN CITY COUNCIL
Agenda Communication Form

City Council Regular Meeting Agenda Item No. E.2.

Meeting Date: 4/15/2024

Prepared By: Linda Ashby, City Clerk

Approved By: Robby Hefton, City Manager

Caption:
PROCLAMATION
"Sherman Service League - 70th Year of Service" - April 2024

Issue:
The City Council would like to recognize the Sherman Service League on their 70th year of operation.

Background:
The Sherman Service League was organized in April 1954, to foster an interest in the social, economic, educational, cultural, and civic conditions of Sherman. The Service League has supported numerous community agencies and organizations, and have raised grant funding for many local charities.

Origination:
The Citiy Council would like to recognize the Sherman Service Legaue for their contributions to the community.

Financial Consideration:
There is no financial consideration to the City.

Staff Recommendation:
Staff recommendation is to present a proclamation recognizing the contributions of the Sherman Service League.

Alternatives:
The Council could choose not to present the proclamation.

Attachments:
1. Sherman Service League Proclamation

Sherman
CLASSIC TOWN. BROAD HORIZON

Proclamation

WHEREAS, the Sherman Service League was organized in April 1954, to foster interest among its members in the social, economic, educational, cultural, and civic conditions of the community, and to encourage volunteer service, and

WHEREAS, since that time, the members of the Sherman Service League have worked to better the Grayson County community through service, volunteerism, and community involvement, and

WHEREAS, since its inception, the Sherman Service League has supported numerous community agencies and organizations, with a diverse set of missions and goals, and

WHEREAS, they have supported organizations ranging from children's charities, to home hospice, indigent health, scholarships, and public transportation, and have raised over a million dollars in grant funds for local charities, and

WHEREAS, the Sherman Service League also sponsors the Grayson County Family Clinic, known today as the Grayson County Child and Family Guidance Center.

NOW THEREFORE, I, David Plyler, Mayor of the City of Sherman, Texas, by the authority vested in me, do hereby recognize

SHERMAN SERVICE LEAGUE

in the City of Sherman and congratulate them on their 70th year of operation, and the service and volunteerism they bring to the Texoma area, as they strive to improve the quality of life for our citizens.

IN WITNESS WHEREOF, I have hereunto set my hand and caused the seal of the City of Sherman to be affixed this the 15th day of April, 2024.

_____
Mayor

ATTEST:

Linda Ashby
City Clerk

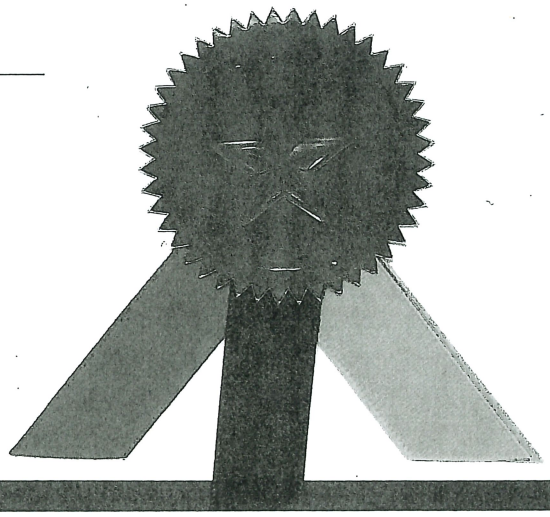

SHERMAN CITY COUNCIL
Agenda Communication Form

City Council Regular Meeting Agenda Item No. F.1.

Meeting Date: 4/15/2024

Prepared By: Rob Rae, Developmental Services Director

Approved By: Robby Hefton, City Manager

Caption:

INTRODUCTION AND PUBLIC HEARING OF ORDINANCE NO. 6710

Amending Sherman's Zoning Ordinance/Code Of Ordinances Chapter 14, To Rezone A Tract Of Land Consisting Of 0.103 acres being a part of the J.B. McAnair Survey, Abstract No. 763, City Of Sherman, Grayson County, Texas, Located At 310 East Brockett Street, Heretofore Zoned R-6 (Single Family Residential) District; Rezoning And Placing The Tract In The R-4 (Single Family Residential) District Zoning Classification, Zach Adlof (Owner), Rodney Martinez, Centro Resources, LLC (Representative) and Burns Surveying (Surveyor) Providing For A Penalty Not To Exceed $2,000.00; Providing A Repealing/Savings Clause, Severability Clause And An Effective Date

Issue:

Consideration of a Zone Change for 0.103 acres of land located at 310 East Brockett Street from an R-6 (Single Family Residential) District to R-4 (Single Family Residential) District.

Background:

The property is located at 310 East Brockett Street between South Montgomery Street and North Branch Street. The owner is requesting a Zone Change from an R-6 (Single Family Residential) District to R-4 (Single Family Residential) District.

Origination:

Zach Adlof (Owner)
Rodney Martinez, Centro Resources, LLC (Representative)
Burns Surveying (Surveyor)

Financial Consideration:

None

Staff Recommendation:

At the March 19, 2024 regular meeting, the Planning and Zoning Commission voted 6/0 to recommend to City Council that the Zone Change be approved. **The proposed use is compatible with the City of Sherman Comprehensive Plan. Staff recommends that Council approve this item.**

Alternatives:

The City Council could deny the request.

Attachments:

1. Ordinance No. 6710
2. Exhibit A - Survey
3. Location Map
4. Zoning Map
5. Future Landuse Map
6. Property Notification Sign
7. Narrative

ORDINANCE NO. 6710

AN ORDINANCE OF THE CITY COUNCIL OF THE CITY OF SHERMAN, TEXAS, AMENDING SHERMAN'S ZONING ORDINANCE/CODE OF ORDINANCES CHAPTER 14, TO REZONE A TRACT OF LAND CONSISTING OF 0.103 ACRES BEING A PART OF THE J.B. MCANAIR SURVEY, ABSTRACT NO. 763, CITY OF SHERMAN, GRAYSON COUNTY, TEXAS, LOCATED AT 310 EAST BROCKETT STREET, HERETOFORE ZONED R-6 (SINGLE FAMILY RESIDENTIAL) DISTRICT; REZONING AND PLACING THE TRACT IN THE R-4 (SINGLE FAMILY RESIDENTIAL) DISTRICT ZONING CLASSIFICATION, ZACH ADLOF (OWNER), RODNEY MARTINEZ, CENTRO RESOURCES, LLC (REPRESENTATIVE) AND BURNS SURVEYING (SURVEYOR) PROVIDING FOR A PENALTY NOT TO EXCEED $2,000.00; PROVIDING A REPEALING/SAVINGS CLAUSE, SEVERABILITY CLAUSE AND AN EFFECTIVE DATE; FINDING AND DETERMINING THAT THE MEETING AT WHICH THIS ORDINANCE IS PASSED WAS NOTICED AND IS OPEN TO THE PUBLIC AS REQUIRED BY LAW

WHEREAS, the City Planning and Zoning Commission and the City Council, in accordance with the state law and the ordinances of the City of Sherman, have given the required notices and have held the required public hearings regarding this proposed rezoning case; and

WHEREAS, the City Council finds that rezoning the property as described in this Ordinance is in accordance with the Comprehensive Plan and will complement or be compatible with the surrounding uses and community facilities; contribute to, enhance, or promote the welfare of the area of request and adjacent properties; not be detrimental to the public health, safety, or general welfare; and conform in all other respects to all applicable zoning regulations and standards; and

WHEREAS, the City Council finds that it is in the public interest to rezone the property as described in this Ordinance.

NOW THEREFORE, BE IT ORDAINED BY THE CITY COUNCIL OF THE CITY OF SHERMAN, TEXAS:

SECTION 1. That, from and after the effective date of this Ordinance, the property described in **Exhibit A – Survey and Legal Description**, attached hereto, located at 310 East Brockett Street and all streets, roads and alleyways contiguous and/or adjacent thereto, shall be rezoned and placed in the R-4 (Single Family Residential) District, and that Sherman's Zoning Ordinance/Code of Ordinances, Chapter 14, is hereby amended so as to hereafter include such property.

SECTION 2. That this Ordinance shall be entered upon the Official Zoning Map as provided in Sherman's Zoning Ordinance/Code of Ordinances, Chapter 14, Section 14.01.002.

SECTION 3. That no person shall acquire any vested interest in this Ordinance or in any other specific regulations contained herein. Any portion of this Ordinance may be repealed or amended by the City Council in the manner provided for by law.

SECTION 4. That it shall be unlawful for any person to make use of the Property in some manner other than as authorized by this Ordinance, and it shall be unlawful for any person to construct on the Property any building that is not in conformity with the permissible uses under this Ordinance. Any person violating any provision of this Ordinance or the General Zoning Ordinance, as they exist or may be amended, shall be deemed guilty of a misdemeanor, and on conviction thereof, shall be fined in an amount not exceeding TWO THOUSAND AND NO/100 DOLLARS ($2,000.00). A violation of any provision of this Ordinance shall constitute a separate violation for each calendar day in which it occurs. The penal provisions imposed under this Ordinance shall not preclude the City from filing suit to enjoin the violation. The City retains all legal rights and remedies available to it pursuant to local, state, and federal law.

SECTION 5. That the Zoning Ordinance shall remain in full force and effect, save and except as amended by this or any other ordinance. All provisions of any ordinance in conflict with this Ordinance are hereby repealed to the extent they are in conflict, but such repeal shall not abate any pending prosecution for violation of the repealed ordinance, nor shall the repeal prevent a prosecution from being commenced for any violation if occurring prior to the repeal of the Ordinance. Any remaining portions of said ordinances shall remain in full force and effect.

SECTION 6. That in the event any section, subsection, sentence, clause or phrase of this Ordinance be declared unconstitutional and/or invalid by a court of competent jurisdiction, it is expressly provided that any and all remaining portions of this Ordinance shall remain in full force and effect. The City Council hereby declares that it would have passed this Ordinance, and each section, subsection, clause or phrase thereof, regardless of whether any one or more sections, subsections, sentences, clauses or phrases is declared unconstitutional and/or invalid.

SECTION 7. That it is hereby officially found and determined that the meetings at which this Ordinance was introduced and passed were open to the public and that public notice of the time, place and purpose of said meetings were given all as required by law.

SECTION 8. That this Ordinance shall become effective from and after its adoption and publication as required by law and the City Charter.

DULY PASSED AND APPROVED BY THE CITY COUNCIL OF THE CITY OF SHERMAN, TEXAS.

INTRODUCED on this the 15th day of April 2024.

ADOPTED on this the 15th day of April 2024.

EFFECTIVE DATE on this the 15th day of April 2024.

CITY OF SHERMAN, TEXAS

BY: _____
DAVID PLYLER, MAYOR

ATTEST:

BY: _____
LINDA ASHBY, CITY CLERK

APPROVED AS TO FORM:
THE LAW FIRM OF ABERNATHY,
ROEDER, BOYD & HULLETT, P.C.

BY: _____
RYAN D. PITTMAN, CITY ATTORNEY

EXHIBIT A

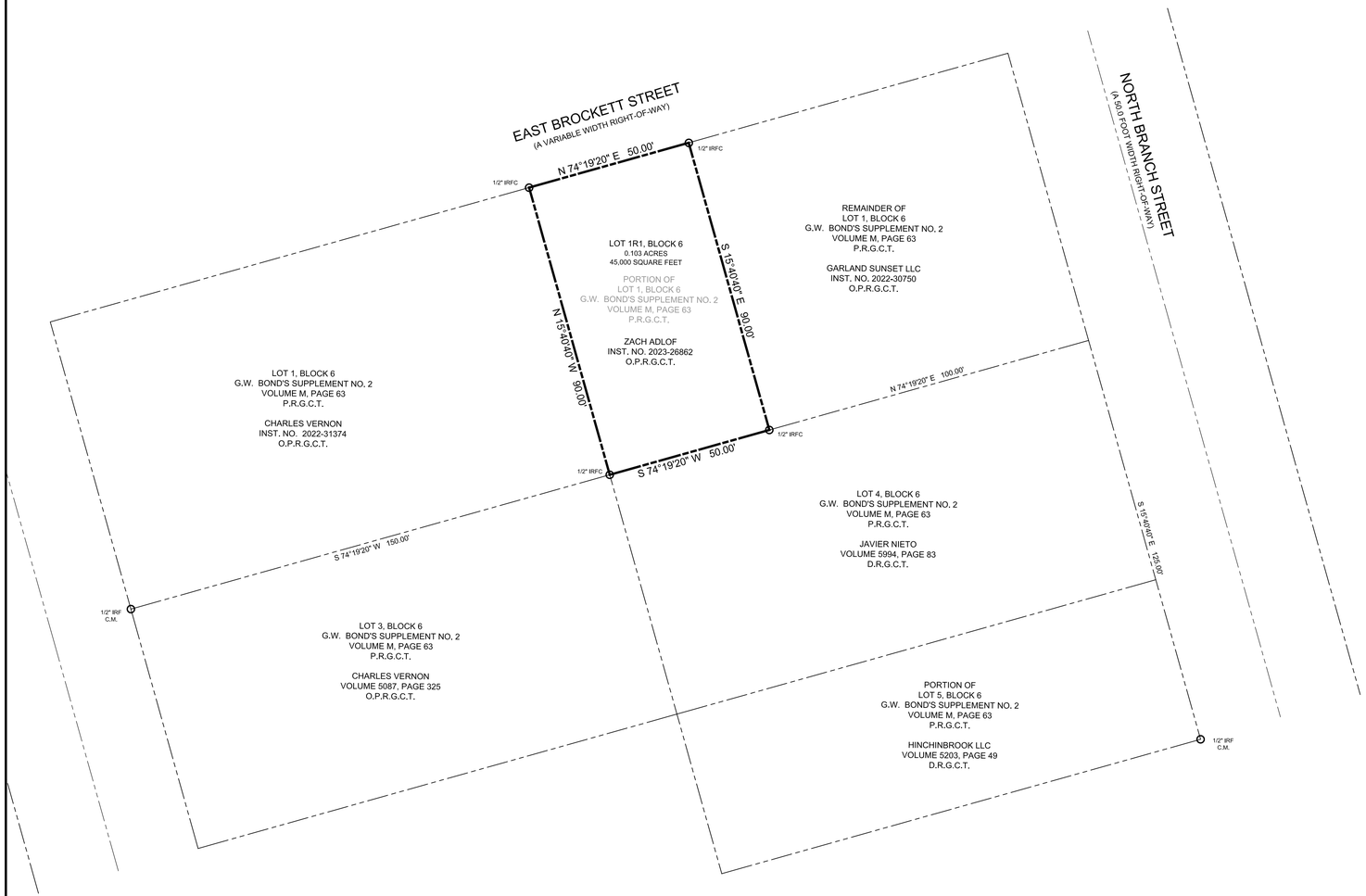

OWNER'S CERTIFICATE

STATE OF TEXAS ~
COUNTY OF GRAYSON ~

WHEREAS Zach Adlof is the owner of all of that certain lot, tract, or parcel of land, being situated in the J. B. Mcanair Survey, Abstract No. 763 in the City of Sherman, Grayson County, Texas, being part of Lot1, Block 6 Bond's Second Addition, an Addition to the City of Sherman, Grayson County, Texas, according to the Plat thereofrecorded in Volume M, Page 63, Plat Records, Grayson County, Texas (P.R.G.C.T.), being a tract of land described in deed to Zach Adolf as recorded under Instrument No. 2023-26862, Official Public Records, Grayson County, Texas (O.P.R.G.C.T.), and being more particularly described by the following metes and bounds description:

BEGINNING at a 1/2 inch yellow-capped iron rod found for comer in the South line of E. Brockett Street, at the Northwest comer of a tract of land described in deed to Garland Sunset, LLC. as recorded under Instrument No. 2022-30750 (D.R.G.C.T.), being the Northeast comer of said Adolf tract;

THENCE South 15 deg. 40 min. 40 sec. East, a distance of 90.00 feet to a 1/2 inch yellow-capped iron rod found for comer in the North line of Lot 4, Block 6 of said G.W. Bond's addition, at the Southwest comer of said Garland Sunset, LLC tract;

THENCE South 74 deg. 19 min. 20 sec. West, a distance of 50.00 feet to a 1/2 inch yellow-capped iron rod found for comer at the Northwest comer of said Lot 4, at the Northeast comer of a tract of land described in deed to Vernon Charles Johnson, Trustees of the Vernon Charles Johnson Revocable Trust as recorded under Instrument No. 2012-00003672 (D.R.G.C.T.), at the Southeast comer of a tract ofland described in deed to Vernon Charles Johnson, Trustees of the Vernon Charles Johnson Revocable Trust, recorded under Instrument No. 2022-31374 (D.R.G.C.T.);

THENCE North 15 deg. 40 min. 40 sec. West, a distance of 90.00 feet to a 1/2 inch yellow-capped iron rod found for comer in the South line of said E. Brockett Street, at the Northeast comer of said Johnson tract (Inst. No. 2022-31374);

THENCE North 74 deg. 19 min. 20 sec. East with the South line of said E. Brockett Street , a distance of 50.00 feet to the PLACE OF BEGINNING and containing 4,500 square feet or 0.103 acres of computed land.

NOTES:

1. ZACH ACRES is situated within the City Limits of Sherman, Texas.
2. Blocking the flow of water or construction improvements in drainage easements, and filling or obstruction of the floodway is prohibited.
3. Blocking the flow of water or construction improvements in drainage easements, and filling or obstruction of the floodway is prohibited.
4. The existing creek or drainage channels traversing along or across the addition will remain as open channels and will be maintained by individual owners of the lot or lots that are traversed by or adjacent to the drainage course along or across said lots.
5. Notice: Selling a portion of this addition by metes and bound is a violation of the County Ordinance and State law and is subject to fines and withholdings of utilities and building permits.
6. Verify exact location of underground utilities prior to any digging or construction.
7. Tree removal and lot grading may be required on individual lots for On-site Sewage Facility installation and/or operation.

Minimum requirements for lot area, width and setback

Lot area:	4,000 sq. ft.
Lot width:	40'
Lot depth:	90'
Front setback (front-loaded garage):	20'
Front setback (rear-loaded garage):	10'
Rear setback (front-loaded garage):	15'
Rear setback (rear-loaded garage):	20'
Side setback (of corner lot):	5' (15')

ZONING EXHIBIT
OF
G. W. BOND'S SUPPLEMENT NO. 3
1 SINGLE FAMILY RESIDENTIAL LOTS
ZONED: "R-6" SINGLE - FAMILY RESIDENTIAL 6,000 SQ. FT. MINIMUM
TO "R-4" SINGLE FAMILY RESIDENTIAL 4,000 SQ. FT. MINIMUM
LOT 1R1, BLOCK 6
G.W. BOND'S SUPPLEMENT NO. 2
J.B. MCANAIR SURVEY, ABSTRACT NO. 763
CITY OF SHERMAN, GRAYSON COUNTY, TEXAS
DATED JANUARY 9, 2024

SHEET: 1 OF 1

LEGEND

GAS METER	FIRE HYDRANT	MONITORING WELL	SIGN
GAS VALVE	WATER METER	TRAFFIC SIGNAL POLE	LIGHT POLE
TELEPHONE PEDESTAL	BOLLARD	TRAFFIC SIGNAL BOX	TYPICAL FENCE
POWER POLE	WATER VALVE	SWB MAN HOLE	CONCRETE
DOWN GUY	TRANSFORMER PAD	GAS LINE MARKER	TREE
S.S. MAN HOLE	ELECTRIC MANHOLE	VAULT	ELECTRIC BOX
CLEAN OUT	STORM DRAIN MAN HOLE	TELEPHONE MANHOLE	

N

0' 10' 20' 40'

SCALE: 1" = 20'

NO.	DATE	REVISION
1.		
2.		
3.		

CENTRO RESOURCES, LLC
TBPS No. 10193888
1475 HERITAGE PKWY., STE 217
MANSFIELD, TEXAS 76063
(817) 354-1445
(817) 798-4039 CELL
surveygroup@att.net

JOB NO.: 23-117P
DATE: JANUARY 09, 2024
SCALE: 1" - 20'
DRAWN BY: RM

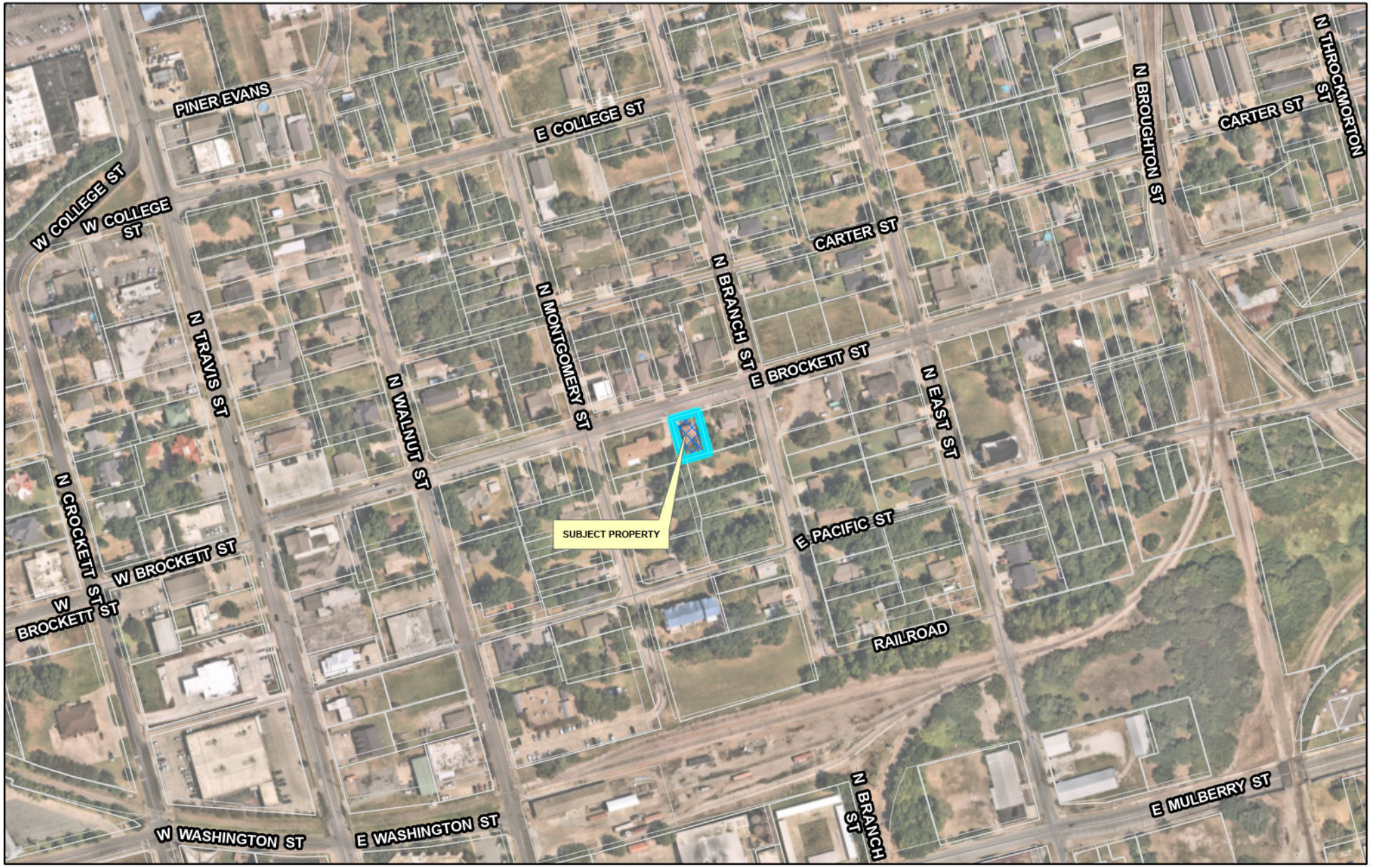

dlagrone H:\PLANNING\Public Notification KT.aprx

Sherman
CLASSIC TOWN. BROAD HORIZON.

City of Sherman, Texas
Development Services Department

CITY OF SHERMAN
LOCATION MAP
310 E BROCKETT ST

N
W E
S

Date: 1/16/2024 2:25 PM

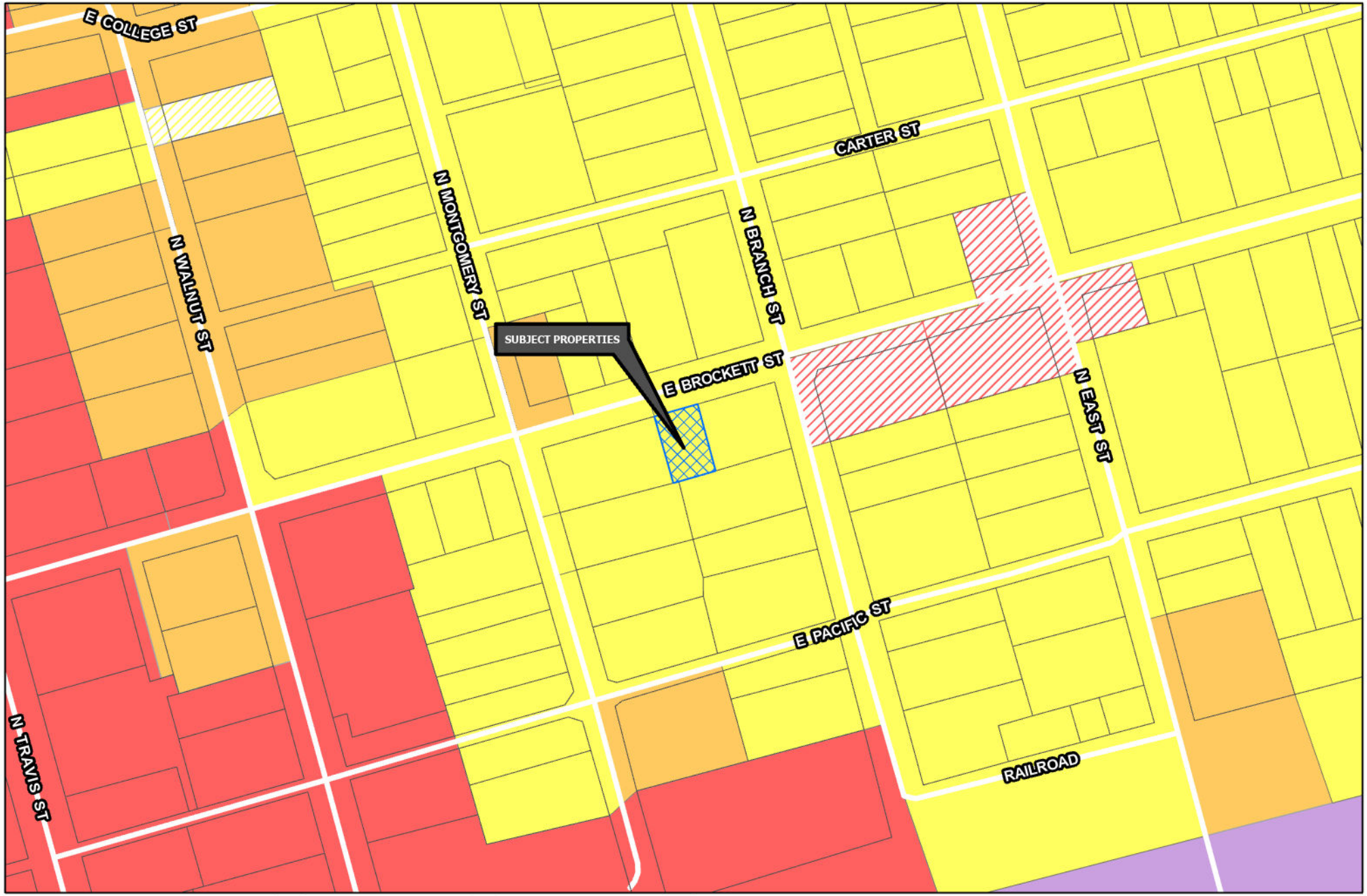

Sherman
CLASSIC TOWN. BROAD HORIZON.

Development Services Department

- R-A Residential Agricultural
- R-E Estate Residential
- R-12 Single Family Residential
- R-6 Single Family Residential
- R-5 Single Family Residential
- R-4 Patio Home Residential
- R-2F Duplex Residential
- R-TH Townhome Residential
- MF-15 Multi-Family Residential
- MF-30 Multi-Family Residential
- MH Manufactured Housing
- C-N Neighborhood Commercial
- C-O Office
- C-1 Retail Business
- C-2 General Commercial
- M-1 Light Manufacturing
- M-1.5 Medium Manufacturing
- M-2 Heavy Manufacturing
- PD Planned Development

Road Names All

Planning & Zoning

CITY OF SHERMAN
ZONING MAP
310 E BROCKETT ST

N
W E
S

Date: 1/16/2021 1:25 PM

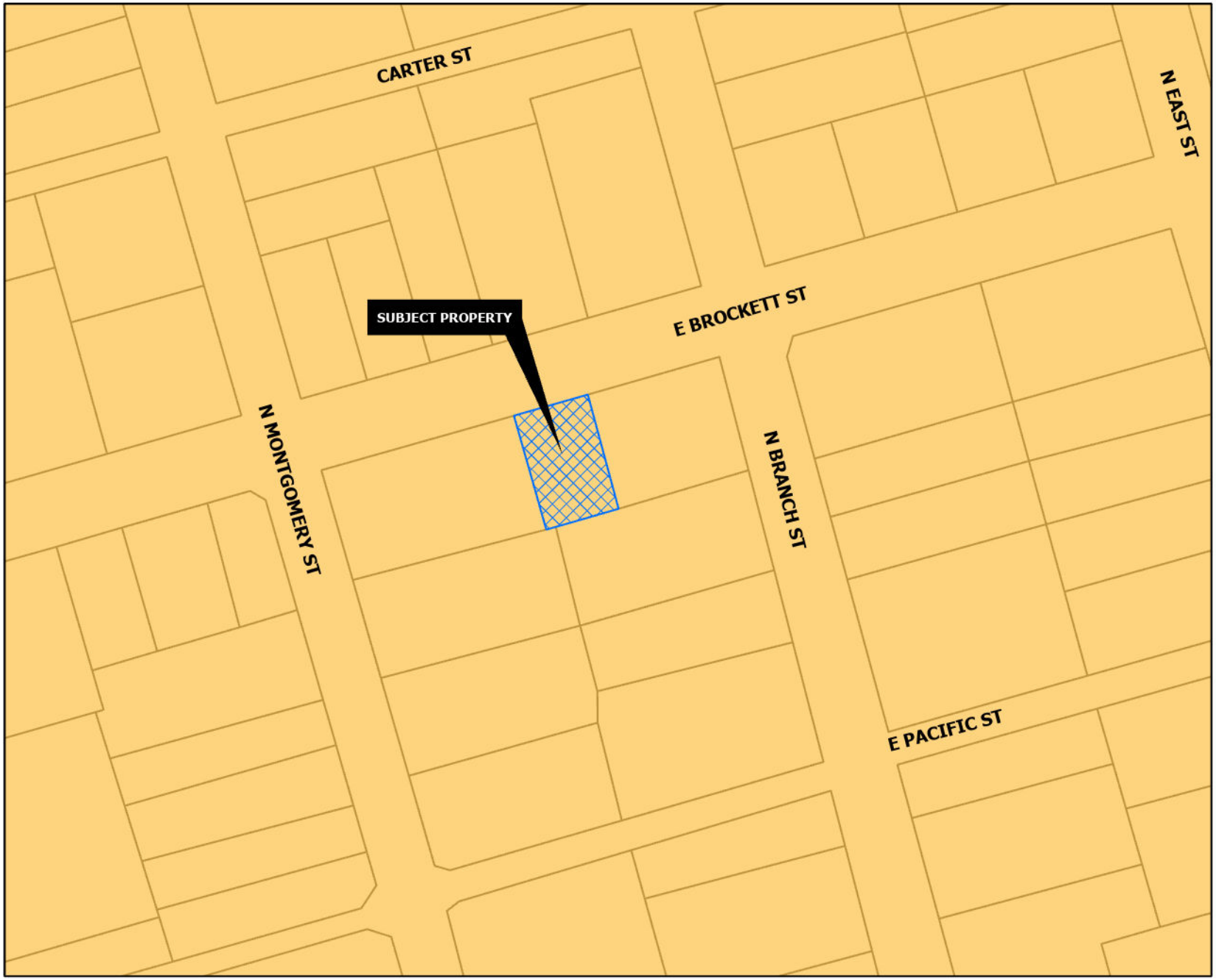

CORE NEIGHBORHOOD

Intent & Character

The Core Neighborhood category is intended to protect and enhance the existing residential areas of Sherman. This area is generally located in the center of the city, east and west of US-75. A majority of the Core Neighborhood category encompasses what is known as east Sherman. This category encourages infill development that maintains the existing character, while increasing the aesthetic appeal of the community. In certain areas, an increase in density can be appropriate through the development of single-family attached products, like townhomes or quad-plexes.

Appropriate Land Use Types

- Single-family detached
- Single-family attached
- Local/neighborhood commercial and office
- Parks and open space
- Schools and civic uses

Compatible Zoning Districts

- Single-Family Residential (R-5, R-4, R-2F, and R-TH)
- Multi-Family Residential (MF-15 and MF-30)
- Manufactured Housing
- Retail Business
- Neighborhood Commercial

Considerations

- Infill that increases density should match the character of the surrounding structures.
- Small-scale commercial uses are appropriate along larger streets and should be compatible with the surrounding residential development.

Sherman
CLASSIC TOWN. BROAD HORIZON.

Development Services Department

- Agriculture/Rural
- Airport
- City Parkland
- Community Commercial
- Core Neighborhood
- Downtown
- Regional Commercial
- Suburban Neighborhood
- Technology Hub
- Planning & Zoning

N
W E
S

CITY OF SHERMAN
FUTURE LAND USE MAP
310 E BROCKETT ST

Date: 1/26/2024 2:25 PM

Sherman
NOTICE OF PROPOSED ZONING CHANGE
PROJECT #: 24-000105
Planning & Zoning Map
FOR MORE INFORMATION CONTACT:
DEVELOPMENT SERVICES
903-892-7229

Marlow, Lauren

To: Rodney Martinez
Subject: RE: 310 E Brockett Street

From: Rodney Martinez
Sent: Wednesday, January 10, 2024 3:16 PM
To: Planning
Subject: 310 E Brockett Street

To whom it may concern:

I am requesting a zoning change from R-6 to R-4. I have attached the application, checklist and zoning exhibit to this email.

Project Narrative

Being a 0.103 acre tract of land out of the JB Mcanair Survey, Abstract No. 763, in the city of Sherman, Grayson County, Texas. Said 0.103 acre tract of land being a portion of Lot 1, Block 6, G. W, Bond's Supplemental No. 3, an addition to the City of Sherman, according to the plat thereof recorded in Volume M. Page 63, Plat Records, Grayson County, Texas.

Rodney Martinez, Partner

CENTRO RESOURCES

1475 Heritage Parkway, Suite 217

Mansfield, Texas 76063

SHERMAN CITY COUNCIL
Agenda Communication Form

City Council Regular Meeting Agenda Item No. F.2.

Meeting Date: 4/15/2024

Prepared By: Rob Rae, Developmental Services Director

Approved By: Robby Hefton, City Manager

Caption:

INTRODUCTION AND PUBLIC HEARING OF ORDINANCE NO. 6711

Amending Sherman's Zoning Ordinance/Code Of Ordinances Chapter 14, To Rezone A Tract Of Land, Tract 1, Consisting Of 42.205 Acres In The S.C. Inman Survey, Abstract 621 And The T. Shannon Survey, Abstract No. 1136, City Of Sherman, Grayson County, Texas, Located In The 2700 Block Blue Flame Road And 5100 Block Fallon Drive, Heretofore Zoned R-6 (Single Family Residential) District; Rezoning And Placing The Tract In The R-TH (Townhome Residential) District, Pilot Point Land Partners, LLC (Owner), Nathan Parrott, Pape-Dawson Engineers (Representative) and Pape-Dawson Engineers (Engineer/Surveyor) Providing For A Penalty Not To Exceed $2,000.00; Providing A Repealing/Savings Clause, Severability Clause And An Effective Date

Issue:

Consideration of a Zone Change for Tract 1, consisting of 42.205 acres of land located in the 2700 Block Blue Flame Road and 5100 Block Fallon Drive from an R-6 (Single Family Residential) District to R-TH (Townhome Residential) District.

Background:

The property is located at 2700 Block Blue Flame Road and 5100 Block Fallon Drive at the corner of Fallon Drive and Blue Flame Road. The owner is requesting a Zone Change for Tract 1 from R-6 (Single Family Residential) District to R-TH (Townhome Residential) District.

The following has been approved for this location:

- 10/17/2023 – Zone Change - Tract 2, consisting of 44.537 acres in the S.C. Inman Survey, Abstract 621 and the T. Shannon Survey, Abstract No. 1136 - Public Hearing, Conceptual Site Plan and Zone Change from M-2 (Heavy Manufacturing) District to MF-30 (Multi Family Residential) District.

Origination:

Pilot Point Land Partners, LLC (Owner)
Nathan Parrott, Pape-Dawson Engineers (Representative)
Pape-Dawson Engineers (Engineer/Surveyor)

Financial Consideration:

None

Staff Recommendation:

At the March 19, 2024 regular meeting, the Planning and Zoning Commission voted 6/0 to recommend to City

Council that the Zone Change be approved. **The proposed use is compatible with the City of Sherman Comprehensive Plan. Staff recommends that Council approve this item.**

Alternatives:
The City Council could deny the request.

Attachments:
1. Ordinance No. 6711
2. Exhibit A - Survey_Legal Description
3. Location Map
4. Zoning Map
5. Future Landuse Map
6. Property Notification Sign
7. Narrative
8. Conceptual Site Plan
9. Landscape Plan

ORDINANCE NO. 6711

AN ORDINANCE OF THE CITY COUNCIL OF THE CITY OF SHERMAN, TEXAS, AMENDING SHERMAN'S ZONING ORDINANCE/CODE OF ORDINANCES CHAPTER 14, TO REZONE A TRACT OF LAND, TRACT 1, CONSISTING OF 42.205 ACRES IN THE S.C. INMAN SURVEY, ABSTRACT 621 AND THE T. SHANNON SURVEY, ABSTRACT NO. 1136, CITY OF SHERMAN, GRAYSON COUNTY, TEXAS, LOCATED IN THE 2700 BLOCK BLUE FLAME ROAD AND 5100 BLOCK FALLON DRIVE, HERETOFORE ZONED AN R-6 (SINGLE FAMILY RESIDENTIAL) DISTRICT; REZONING AND PLACING THE TRACT IN THE R-TH (TOWNHOME RESIDENTIAL) DISTRICT, PILOT POINT LAND PARTNERS, LLC (OWNER), NATHAN PARROTT, PAPE-DAWSON ENGINEERS (REPRESENTATIVE) AND PAPE-DAWSON ENGINEERS (ENGINEER/SURVEYOR) PROVIDING FOR A PENALTY NOT TO EXCEED $2,000.00; PROVIDING A REPEALING/SAVINGS CLAUSE, SEVERABILITY CLAUSE AND AN EFFECTIVE DATE; FINDING AND DETERMINING THAT THE MEETING AT WHICH THIS ORDINANCE IS PASSED WAS NOTICED AND IS OPEN TO THE PUBLIC AS REQUIRED BY LAW

WHEREAS, the City Planning and Zoning Commission and the City Council, in accordance with the state law and the ordinances of the City of Sherman, have given the required notices and have held the required public hearings regarding this proposed rezoning case; and

WHEREAS, the City Council finds that rezoning the property as described in this Ordinance is in accordance with the Comprehensive Plan and will complement or be compatible with the surrounding uses and community facilities; contribute to, enhance, or promote the welfare of the area of request and adjacent properties; not be detrimental to the public health, safety, or general welfare; and conform in all other respects to all applicable zoning regulations and standards; and

WHEREAS, the City Council finds that it is in the public interest to rezone the property as described in this Ordinance.

NOW THEREFORE, BE IT ORDAINED BY THE CITY COUNCIL OF THE CITY OF SHERMAN, TEXAS:

SECTION 1. That, from and after the effective date of this Ordinance, the property described in **Exhibit A – Survey and Legal Description**, attached hereto, located in the 2700 Block Blue Flame Road And 5100 Block Fallon Drive and all streets, roads and alleyways contiguous and/or adjacent thereto, shall be rezoned and placed in the R-TH (Townhome Residential) District, and that Sherman's Zoning Ordinance/Code of Ordinances, Chapter 14, is hereby amended so as to hereafter include such property.

SECTION 2. That this Ordinance shall be entered upon the Official Zoning Map as provided in Sherman's Zoning Ordinance/Code of Ordinances, Chapter 14, Section 14.01.002.

SECTION 3. That no person shall acquire any vested interest in this Ordinance or in any other specific regulations contained herein. Any portion of this Ordinance may be repealed or amended by the City Council in the manner provided for by law.

SECTION 4. That it shall be unlawful for any person to make use of the Property in some manner other than as authorized by this Ordinance, and it shall be unlawful for any person to construct on the Property any building that is not in conformity with the permissible uses under this Ordinance. Any person violating any provision of this Ordinance or the General Zoning Ordinance, as they exist or may be amended, shall be deemed guilty of a misdemeanor, and on conviction thereof, shall be fined in an amount not exceeding TWO THOUSAND AND NO/100 DOLLARS ($2,000.00). A violation of any provision of this Ordinance shall constitute a separate violation for each calendar day in which it occurs. The penal provisions imposed under this Ordinance shall not preclude the City from filing suit to enjoin the violation. The City retains all legal rights and remedies available to it pursuant to local, state, and federal law.

SECTION 5. That the Zoning Ordinance shall remain in full force and effect, save and except as amended by this or any other ordinance. All provisions of any ordinance in conflict with this Ordinance are hereby repealed to the extent they are in conflict, but such repeal shall not abate any pending prosecution for violation of the repealed ordinance, nor shall the repeal prevent a prosecution from being commenced for any violation if occurring prior to the repeal of the Ordinance. Any remaining portions of said ordinances shall remain in full force and effect.

SECTION 6. That in the event any section, subsection, sentence, clause or phrase of this Ordinance be declared unconstitutional and/or invalid by a court of competent jurisdiction, it is expressly provided that any and all remaining portions of this Ordinance shall remain in full force and effect. The City Council hereby declares that it would have passed this Ordinance, and each section, subsection, clause or phrase thereof, regardless of whether any one or more sections, subsections, sentences, clauses or phrases is declared unconstitutional and/or invalid.

SECTION 7. That it is hereby officially found and determined that the meetings at which this Ordinance was introduced and passed were open to the public and that public notice of the time, place and purpose of said meetings were given all as required by law.

SECTION 8. That this Ordinance shall become effective from and after its adoption and publication as required by law and the City Charter.

DULY PASSED AND APPROVED BY THE CITY COUNCIL OF THE CITY OF SHERMAN, TEXAS.

INTRODUCED on this the 15th day of April 2024.

ADOPTED on this the 15th day of April 2024.

EFFECTIVE DATE on this the 15th day of April 2024.

CITY OF SHERMAN, TEXAS

BY: _____
DAVID PLYLER, MAYOR

ATTEST:

BY: _____
LINDA ASHBY, CITY CLERK

APPROVED AS TO FORM:
THE LAW FIRM OF ABERNATHY,
ROEDER, BOYD & HULLETT, P.C.

BY: _____
RYAN D. PITTMAN, CITY ATTORNEY

EXHIBIT A

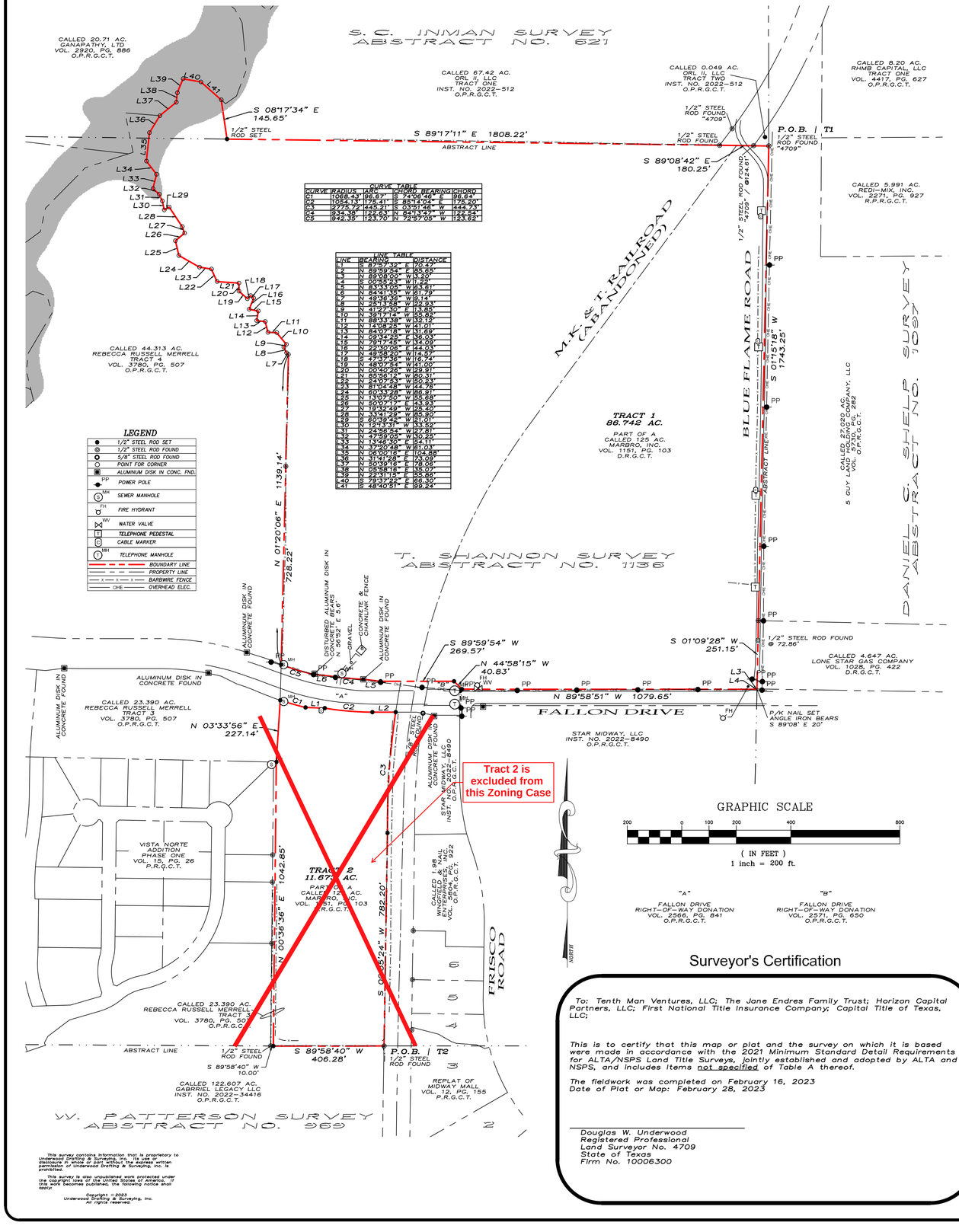

CURVE TABLE					
CURVE	RADIUS	ARC	BEARING	CHORD	
C1	1088.43'	96.97'	S 74°06'46" E	96.64'	
C2	1054.13'	175.41'	S 83°14'04" E	175.20'	
C3	2775.72'	445.21'	S 03°51'46" W	444.73'	
C4	934.38'	122.83'	N 84°13'47" W	122.54'	
C5	942.35'	123.70'	N 72°57'05" W	123.62'	

LINE TABLE		
LINE	BEARING	DISTANCE
L1	S 87°59'32" E	170.42'
L2	N 89°58'51" E	85.65'
L3	S 89°58'51" W	13.80'
L4	S 00°55'23" W	11.22'
L5	S 83°09'05" W	95.61'
L6	N 84°41'35" W	61.79'
L7	N 49°36'36" W	9.14'
L8	N 25°13'58" W	122.93'
L9	N 41°27'30" E	13.85'
L10	N 39°17'14" W	55.82'
L11	N 88°33'28" W	35.12'
L12	N 14°08'25" W	41.01'
L13	N 84°07'18" W	31.69'
L14	N 09°34'25" E	36.03'
L15	N 79°17'45" W	34.09'
L16	N 22°30'06" E	44.03'
L17	N 49°36'36" W	14.57'
L18	N 25°13'58" W	122.93'
L19	N 41°27'30" E	13.85'
L20	N 00°40'26" W	29.91'
L21	N 84°09'15" W	150.91'
L22	N 81°04'28" W	44.76'
L23	N 60°33'28" W	86.91'
L24	N 24°07'53" W	50.23'
L25	N 10°37'47" E	43.93'
L26	N 19°32'49" W	25.40'
L27	N 33°41'29" W	85.90'
L28	S 60°39'42" W	21.01'
L29	N 12°13'31" W	33.52'
L30	N 24°56'54" W	27.81'
L31	N 47°59'05" W	30.25'
L32	N 13°46'30" E	54.11'
L33	N 37°20'48" W	61.03'
L34	N 06°00'16" E	104.88'
L35	N 31°41'28" E	73.09'
L36	N 50°39'16" E	78.06'
L37	N 05°58'16" E	35.07'
L38	N 22°31'15" E	55.86'
L39	N 79°37'22" E	66.30'
L40	N 48°40'51" E	99.24'
L41	S 48°40'51" E	99.24'

LEGEND

- 1/2" STEEL ROD SET
- 1/2" STEEL ROD FOUND
- 5/8" STEEL ROD FOUND
- POINT FOR CORNER
- ALUMINUM DISK IN CONC. FND.
- PP POWER POLE
- MH SEWER MANHOLE
- FH FIRE HYDRANT
- WV WATER VALVE
- TELEPHONE PEDESTAL
- CABLE MARKER
- TELEPHONE MANHOLE
- BOUNDARY LINE
- PROPERTY LINE
- BARBWIRE FENCE
- OHE OVERHEAD ELEC.

TITLE DESCRIPTION

TRACT 1

Situated in the County of Grayson, State of Texas, being a part of S.C. Inman Survey, Abstract No. 621 and T. Shannon Survey, Abstract No. 1136, and being a part of a called 125 acre tract of land described in the deed to Marbro, Inc., recorded in Volume 1151, Page 103, Deed Records, Grayson County, Texas, and being described by metes and bounds as follows:

Beginning at a 1/2" steel rod stamped "4709" found for the northeast corner of said 125 acre tract, common to the southeast corner of a called 0.049 acre tract of land described in the deed to ORL II, LLC, recorded in Instrument No. 2022-512, Official Public Records, Grayson County, Texas, and on the westerly line of a called 27.020 acre tract of land described in the deed to 5 Guy Land Holding Company, LLC, recorded in Volume 5730, Page 282, said Official Public Records;

Thence South 01°15'18" West, with the easterly line of said 125 acre tract, and with the westerly line of said 27.020 acre tract, and entering Blue Flame Road, a distance of 1743.25 feet to a 1/2" steel rod found for the southwest corner of said 27.020 acre tract, common to the northwest corner of a called 4.647 acre tract of land described in the deed to Lone Star Gas Company, recorded in Volume 1028, Page 422, said Deed Records;

Thence South 01°09'28" West, continuing with the easterly line of said 125 acre tract, and with the westerly line of said 4.647 acre tract, passing en route at a distance of 72.86 feet a 1/2" steel rod found for witness, and continuing on said course a total distance of 251.15 feet to a P/K nail set for the southeast corner of the herein described tract of land, common to the southwest corner of said 4.647 acre tract, and at the intersection of said Blue Flame Road and the northerly right-of-way line of Fallon Drive, and from which an angle iron bears South 89°08' East, a distance of 20.00 feet;

Thence crossing said 125 acre tract, with the northerly right-of-way line of said Fallon Drive, the following 9 courses:

1. North 89°08'00" West, a distance of 3.20 feet to a point;
2. South 00°55'23" West, a distance of 1.22 feet to a point;
3. North 89°58'51" West, a distance of 1079.65 feet to a set 1/2" steel rod;
4. North 44°58'15" West, a distance of 40.83 feet to a set 1/2" steel rod;
5. South 89°59'54" West, a distance of 269.57 feet to a set 1/2" steel rod;
6. North 83°33'05" West, a distance of 63.61 feet to a found aluminum disk in concrete;
7. With a curve to the right having a radius of 934.38 feet, (chord bears North 84°13'47" West, 122.54 feet) an arc length of 122.63 feet to a set 1/2" steel rod;
8. North 84°41'35" West, a distance of 61.79 feet to a point, from which a disturbed aluminum disk in concrete bears North 56°52' East, a distance of 5.6 feet;
9. With a curve to the right having a radius of 942.35 feet, (chord bears North 72°57'05" West, 123.62 feet) an arc length of 123.70 feet to a 1/2" steel rod set for the southwest corner of the herein described tract of land, common to the southeast corner of a called 44.313 acre tract of land described as Tract 4 in the deed to Rebecca Russell Merrell, recorded in Volume 3780, Page 507, said Official Public Records, and on the westerly line of said 125 acre tract;

Thence North 01°20'06" East, with the westerly line of said 125 acre tract, and with the easterly line of said 44.313 acre tract, passing en route at a distance of 728.22 feet a 1/2" steel rod found, and continuing on said course a total distance of 1139.14 feet to a point, said point falls in a creek;

Thence continuing with the westerly line of said 125 acre tract, and in said creek, the following 36 courses:

1. North 49°36'36" West, a distance of 9.14 feet to a point;
2. North 25°13'58" West, a distance of 122.93 feet to a point;
3. North 41°27'30" East, a distance of 13.85 feet to a point;
4. North 39°17'14" West, a distance of 55.82 feet to a point;
5. North 88°33'28" West, a distance of 32.12 feet to a point;
6. North 14°08'25" West, a distance of 41.01 feet to a point;
7. North 84°07'18" West, a distance of 31.69 feet to a point;
8. North 09°34'25" East, a distance of 36.03 feet to a point;
9. North 79°17'45" West, a distance of 34.09 feet to a point;
10. North 22°30'06" East, a distance of 44.03 feet to a point;
11. North 49°36'20" West, a distance of 14.57 feet to a point;
12. South 47°37'36" West, a distance of 16.74 feet to a point;
13. North 48°07'54" West, a distance of 41.00 feet to a point;
14. North 00°40'26" West, a distance of 29.91 feet to a point;
15. North 85°56'12" West, a distance of 80.31 feet to a point;
16. North 24°07'53" West, a distance of 50.23 feet to a point;
17. North 81°04'48" West, a distance of 44.76 feet to a point;
18. North 60°33'28" West, a distance of 86.91 feet to a point;
19. North 13°07'50" West, a distance of 55.68 feet to a point;
20. North 50°07'17" East, a distance of 43.93 feet to a point;
21. North 19°32'49" West, a distance of 25.40 feet to a point;
22. North 33°41'29" West, a distance of 85.90 feet to a point;
23. South 60°39'42" West, a distance of 21.01 feet to a point;
24. North 12°13'31" West, a distance of 33.52 feet to a point;
25. North 24°56'54" West, a distance of 27.81 feet to a point;
26. North 47°59'05" West, a distance of 30.25 feet to a point;
27. North 13°46'30" East, a distance of 54.11 feet to a point;
28. North 37°20'48" West, a distance of 61.03 feet to a point;
29. North 06°00'16" East, a distance of 104.88 feet to a point;
30. North 31°41'28" East, a distance of 73.09 feet to a point;
31. North 50°39'16" East, a distance of 78.06 feet to a point;
32. North 05°58'16" East, a distance of 35.07 feet to a point;
33. North 22°31'15" East, a distance of 55.86 feet to a point;
34. South 79°37'22" East, a distance of 66.30 feet to a point;
35. South 48°40'51" East, a distance of 99.24 feet to a point;
36. South 08°17'34" East, a distance of 145.65 feet to a 1/2" steel rod previously set for the southwest corner of a called 67.42 acre tract of land described as Tract One in aforesaid deed to ORL II, LLC, (2022-512);

Thence South 89°17'11" East, with the northerly line of said 125 acre tract, and with the southerly line of said 67.42 acre tract, a distance of 1808.22 feet to a 1/2" steel rod found for the southeast corner of said 67.42 acre tract, and on the westerly line of M.K. & T. Railroad (abandoned);

Thence South 89°08'42" East, continuing with the northerly line of said 125 acre tract, and crossing said M.K. & T. Railroad, passing en route at a distance of 124.61 feet a 1/2" steel rod found for the southwest corner of aforesaid 0.049 acre tract, and continuing on said course, with the southerly line of said 0.049 acre tract, a distance of 180.25 feet to the Point of Beginning and containing 86.742 acres of land, more or less.

TRACT 2

Situated in the County of Grayson, State of Texas, being a part of S.C. Inman Survey, Abstract No. 621 and T. Shannon Survey, Abstract No. 1136, and being a part of a called 125 acre tract of land described in the deed to Marbro, Inc., recorded in Volume 1151, Page 103, Deed Records, Grayson County, Texas, and being described by mates and bounds as follows:

Beginning at a 1/2" steel rod found for the southeast corner of the herein described tract of land, common to the eastern-most northeast corner of a called 122.607 acre tract of land described in the deed to Gabriel Legacy LLC, recorded in Instrument No. 2022-34416, Official Public Records, Grayson County, Texas, and on the southerly line of said 125 acre tract, and on the westerly right-of-way line of M.K. & T. Railroad (abandoned);

Thence South 89°58'40" West, with the southerly line of said 125 acre tract, and with a northerly line of said 122.607 acre tract, a distance of 406.28 feet to a 1/2" steel rod set for the southwest corner of said 125 acre tract, common to the southeast corner of a called 23.390 acre tract of land described as Tract 3 in the deed to Rebecca Russell Merrell, recorded in Volume 3780, Page 507, said Official Public Records, and from which a 1/2" steel rod found for the southern-most southwest corner of said 23.390 acre tract bears South 89°58'40" West, a distance of 10.00 feet;

Thence North 00°36'36" East, with the westerly line of said 125 acre tract, and with the easterly line of said 23.390 acre tract, a distance of 1042.85 feet to a set 1/2" steel rod;

Thence North 03°33'56" East, continuing with the westerly line of said 125 acre tract, and with the easterly line of said 23.390 acre tract, a distance of 227.14 feet to a 1/2" steel rod set for the northwest corner of the herein described tract of land, common to the northeast corner of said 23.390 acre tract, and on the southerly right-of-way line of Fallon Drive;

Thence crossing said 125 acre tract, with the southerly right-of-way line of said Fallon Drive, the following 4 courses:

1. With a curve to the left having a radius of 1088.43 feet, (chord bears South 74°06'46" East, 96.64 feet) an arc length of 96.67 feet to a set 1/2" steel rod;
2. South 87°57'32" East, a distance of 70.47 feet to a set 1/2" steel rod;
3. With a curve to the left having a radius of 1054.13 feet, (chord bears South 85°14'04" East, 175.20 feet) an arc length of 175.41 feet to a set 1/2" steel rod;
4. North 89°59'54" East, a distance of 85.65 feet to a set 1/2" steel rod for the northeast corner of the herein described tract of land, and on the westerly right-of-way line of aforesaid M.K. & T. Railroad;

Thence continuing across said 125 acre tract, with the westerly right-of-way line of said M.K. & T. Railroad, and with a curve to the left having a radius of 2775.72 feet, (chord bears South 03°51'46" West, 444.73 feet) an arc length of 445.21 feet to a set 1/2" steel rod;

Thence South 00°55'24" West, continuing continuing across said 125 acre tract, with the westerly right-of-way line of said M.K. & T. Railroad, a distance of 782.20 feet to the Point of Beginning and containing 11.673 acres of land, more or less.

"A"
FALLON DRIVE
RIGHT-OF-WAY DONATION
VOL. 2566, PG. 841
O.P.R.G.C.T.

"B"
FALLON DRIVE
RIGHT-OF-WAY DONATION
VOL. 2571, PG. 650
O.P.R.G.C.T.

Surveyor's Certification

To: Tenth Man Ventures, LLC; The Jane Endres Family Trust; Horizon Capital Partners, LLC; First National Title Insurance Company; Capital Title of Texas, LLC;

This is to certify that this map or plat and the survey on which it is based were made in accordance with the 2021 Minimum Standard Detail Requirements for ALTA/NSPS Land Title Surveys, jointly established and adopted by ALTA and NSPS, and includes items not specified of Table A thereof.

The fieldwork was completed on February 16, 2023
Date of Plat or Map: February 28, 2023

Douglas W. Underwood
Registered Professional
Land Surveyor No. 4709
State of Texas
Firm No. 10006300

This survey contains information that is proprietary to Underwood Drafting & Surveying, Inc. Its use or disclosure in whole or part without the express written permission of Underwood Drafting & Surveying, Inc. is prohibited.

This survey is also unpublished work protected under the copyright laws of the United States of America. If this work becomes published, the following notice shall apply:

Copyright ©2023
Underwood Drafting & Surveying, Inc.
All rights reserved.

Zoning Information

The subject tract lies within the limits of the following:

Tract 1: R-6 (Single Family Residential District)
M-2 (Heavy Manufacturing District)

Tract 2: R-6 (Single Family Residential District)

R-6 (Single Family Residential District):
Front Setback: 20 feet
Rear Setback: 20 feet
Side Setback (of corner lot): 6 feet (15 feet)
Max. Height: 35 feet

M-2 (Heavy Manufacturing District):
Front Setback: 15 feet
Rear Setback: 10 feet
Side Setback: 10 feet
Max. Height: 150 feet unless set back from the required yard lines an additional foot for each 4 feet in height above 150 feet.

Surveyor's Notes

1. The property has a total area of 98.415 acres of land.
2. There are no visible signs of cemeteries observed at the time of this survey.
3. All visible above ground indications of public utilities are depicted hereon.
4. There is no observable evidence of site use as a solid waste dump, sump or sanitary landfill.
5. There is no evidence of recent street or sidewalk construction.
6. There is no evidence of recent dirt work on the site.
7. The subject tract has direct access to Fallon Drive, a public street maintained by the City of Sherman.

Flood Information

TRACT 1:

By graphic plotting only, a portion of the subject tract lies within Floodway Zone "AE" (areas outside the 100 year flood) as defined by FEMA Flood Insurance Rate Map, No. 48181C 0280 F, which bears an effective date of September 29, 2010.

TRACT 2:

By graphic plotting only, a portion of the subject tract lies within Zone "X" (areas outside the 100 year flood) as defined by FEMA Flood Insurance Rate Map, No. 48181C 0280 F which bears an effective date of September 29, 2010, and 48181C 0290 G, which bears an effective date of September 1, 2022.

Title Information

The Title Description and Schedule B items hereon are from Capital Title of Texas, LLC, commitment # 22-703183-DC, Effective Date September 18, 2022.

Schedule "B" Items

10f. Roadway Dedication Agreement by and between Mabro, a partnership consisting of Anita D. Vogel, Urban J. Endres, Chris A. f. Christensen, Ellis L. Olmstead, E. T. Simons, James E. Clay, E. B. Chapman and Polly J. Statham to Sherman Partnership, a Texas general partnership, dated August 2, 1984, filed August 2, 1984, recorded in Volume 1707, Page 261, Real Property Records, Grayson County, Texas.

Does not affect the surveyed property.

10g. Fallon Drive Right-of-Way Donation granted by Ellis Olmstead, Anita Vogel, Urban J. Endres, the Estate of C. A. Christensen, g. Deceased by Duane Covington, Independent Executor, E. T. Simons, James E. Clay, and Polly Jane Statham to the City of Sherman, Texas, dated July 17, 1997, filed August 28, 1997, recorded in Volume 2566, Page 841, Real Property Records, Grayson County, Texas.

Right-of-way for Fallon Drive. Does not affect the surveyed property.

10h. Deed of Dedication granted by Ellis Olmstead, Anita Vogel, Urban J. Endres, the Estate of C. A. Christensen, Deceased by h. Duane Covington, Independent Executor, E. T. Simons, James E. Clay, and Polly Jane Statham to the City of Sherman, Texas, dated August 14, 1997, filed September 15, 1997, recorded in Volume 2571, Page 650, Real Property Records, Grayson County, Texas.

Right-of-way for Fallon Drive. Does not affect the surveyed property.

Basis of Bearings

~ Bearings are based ~
GRID NORTH, NAD 83
TEXAS STATE PLANE
COORDINATE SYSTEM
NORTH CENTRAL ZONE

ALTA/NSPS LAND TITLE SURVEY

UNDERWOOD
DRAFTING & SURVEYING, INC.
3404 INTERURBAN ROAD
DENISON, TEXAS 75020
PHONE (903)465-2151
FAX (903)465-2152

Project Location
GRAYSON COUNTY

Project Address
TBD FALLON DR.
CITY OF SHERMAN

Project Name

Prepared For:
TENTH MAN VENTURES, LLC

Job Number 23020124

Sheet 1 of 1

		Revisions	Date
Date	02/27/23		
Dwn. By	BNH		
Aprvd. By	DWU		
Dwg. No.	23020124		
Scale	1" = 200'		

PAPE-DAWSON ENGINEERS

LEGAL DESCRIPTION
TRACT ONE 42.205 ACRES

BEING A TRACT OF LAND, SITUATED IN S.C. INMAN SURVEY, ABSTRACT NO. 621, AND THE T. SHANNON SURVEY, ABSTRACT NO. 1136 SURVEY, GRAYSON COUNTY, TEXAS, AND BEING A PORTION OF A CALLED 125 ACRE TRACT OF LAND DESCRIBED IN DEED TO PILOT POINT LAND PARTNERS, LLC, RECORDED IN INSTRUMENT NUMBER 2023-6266 OFFICIAL PUBIC RECORDS, GRAYSON COUNTY, TEXAS (O.P.R.G.C.T.), AND BEING MORE PARTICULARLY DESCRIBED BY METES AND BOUNDS AS FOLLOWS;

BEGINNING AT THE SOUTHWEST CORNER OF SAID PILOT POINT LAND PARTNERS TRACT, SAME BEING THE SOUTHEAST CORNER OF A CALLED 44.313 ACRE TRACT OF LAND DESCRIBED IN DEED TO SHERMAN 60 ACRES, LLC, RECORDED IN INSTRUMENT NUMBER 2022-38319, O.P.R.G.C.T.;

THENCE N 01°20'06" E, A DISTANCE OF 1139.14 FEET TO THE APPOXIMATE CENTERLINE OF A CREEK;

THENCE: NORTHERLY, ALONG THE APPOXIMATE CENTERLINE OF A CREEK, THE FOLLOWING COURSES AND DISTANCES:

N 49°36'36" W, A DISTANCE OF 9.14 FEET;

N 25°13'58" W, A DISTANCE OF 22.93 FEET;

N 41°27'30" E, A DISTANCE OF 13.85 FEET;

N 39°17'14" W, A DISTANCE OF 55.82 FEET;

N 88°33'38" W, A DISTANCE OF 32.12 FEET;

N 14°08'25" W, A DISTANCE OF 41.01 FEET;

N 84°07'18" W, A DISTANCE OF 31.69 FEET;

N 09°34'25" E, A DISTANCE OF 36.03 FEET;

N 79°17'45" W, A DISTANCE OF 34.09 FEET;

N 22°30'06" E, A DISTANCE OF 44.03 FEET;

N 49°58'20" W, A DISTANCE OF 14.57 FEET;

S 47°37'36" W, A DISTANCE OF 16.74 FEET;

N 48°07'54" W, A DISTANCE OF 41.00 FEET;

N 00°40'26" W, A DISTANCE OF 29.91 FEET;

N 85°56'12" W, A DISTANCE OF 80.31 FEET;

N 24°07'53" W, A DISTANCE OF 50.23 FEET;

N 81°04'48" W, A DISTANCE OF 44.76 FEET;

N 60°33'28" W, A DISTANCE OF 86.91 FEET;

N 13°07'50" W, A DISTANCE OF 55.68 FEET;

N 50°07'17" E, A DISTANCE OF 43.93 FEET;

N 19°32'49" W, A DISTANCE OF 25.40 FEET;

N 33°41'29" W, A DISTANCE OF 85.90 FEET;

S 60°39'42" W, A DISTANCE OF 21.01 FEET;

N 12°13'31" W, A DISTANCE OF 33.52 FEET;

N 24°56'54" W, A DISTANCE OF 27.81 FEET;

N 47°59'05" W, A DISTANCE OF 30.25 FEET;

N 13°46'30" E, A DISTANCE OF 54.11 FEET;

N 37°20'48" W, A DISTANCE OF 61.03 FEET;

N 06°00'16" E, A DISTANCE OF 104.88 FEET;

N 31°41'28" E, A DISTANCE OF 73.09 FEET;

N 50°39'16" E, A DISTANCE OF 78.06 FEET;

N 05°58'16" E, A DISTANCE OF 35.07 FEET;

N 22°31'15" E, A DISTANCE OF 55.86 FEET;

S 79°37'22" E, A DISTANCE OF 66.30 FEET;

S 48°40'51" E, A DISTANCE OF 99.24 FEET;

S 08°17'34" E, A DISTANCE OF 145.65 FEET TO THE NORTH LINE OF SAID PILOT POINT LAND PARTNERS TRACT, SAME BEING THE SOUTHWEST CORNER OF A CALLED 67.42 ACRE TRACT OF LAND DESCRIBED AS TRACT ONE IN DEED TO ORL II, LLC, RECORDED IN INSTRUMENT NUMBER 2022-512, O.P.R.G.C.T.;

THENCE S 89°17'11" E, ALONG THE NORTH LINE OF SAID PILOT POINT LAND PARTNERS TRACT, A DISTANCE OF 1711.20 FEET TO THE APPROXIMATE CENTERLINE OF A CREEK AND BEING THE NORTHEAST CORNER OF THE TRACT OF LAND DESCRIBED HEREIN;

THENCE SOUTHWESTERLY ALONG THE APPROXIMATE CENTERLINE OF A CREEK TO THE SOUTH LINE OF SAID PILOT POINT LAND PARTNERS TRACT AND BEING THE SOUTHEAST CORNER OF THE TRACT OF LAND DESCRIBED HEREIN;

THENCE ALONG THE SOUTH LINE OF SAID PILOT POINT LAND PARTNERS TRACT, THE FOLLOWING COURSES AND DISTANCES:

N 83°33'05" WA DISTANCE OF 4.36 FEET FOR THE BEGINNING OF A NON-TANGENT CURVE TO THE RIGHT HAVING A RADIUS OF 934.38 FEET, A CENTRAL ANGLE OF 07°31'11", A CHORD BEARING AND DISTANCE OF N 84°13'47" W, 122.54 FEET;

ALONG SAID NON-TANGENT CURVE TO THE RIGHT, AN ARC LENGTH OF 122.63 FEET

N 84°41'35" WA DISTANCE OF 61.79 FEET FOR THE BEGINNING OF A NON-TANGENT CURVE TO THE RIGHT HAVING A RADIUS OF 942.35 FEET, A CENTRAL

ANGLE OF 07°31'16", A CHORD BEARING AND DISTANCE OF N 72°57'05" W, 123.61 FEET;

ALONG SAID NON-TANGENT CURVE TO THE RIGHT, AN ARC LENGTH OF 123.70 FEET TO THE **POINT OF BEGINNING**, AND **CONTAINING** 42.205 ACRES OR 1,838,447 SQUARE FEET OF LAND MORE OR LESS

BEARINGS ARE BASED ON THE TEXAS COORDINATE SYSTEM ESTABLISHED FOR THE NORTH CENTRAL ZONE (4202) FROM NORTH AMERICAN DATUM 1983 AS NOTED ON THE ALTA/NSPS LAND TITLE SURVEY DONE BY UNDERWOOD DRAFTING AND SURVEYING, INC. DATED 02/27/23.

"This document was prepared under 22 Texas Administrative Code §138.95, does not reflect the results of an on the ground survey, and is not to be used to convey or establish TBPELS Acts and Rules Page 97 of 109 Updated April 1, 2021 interests in real property except those rights and interests implied or established by the creation or reconfiguration of the boundary of the political subdivision for which it was prepared."

LEGAL DESCRIPTION
TRACT TWO 44.537 ACRES

BEING A TRACT OF LAND, SITUATED IN S.C. INMAN SURVEY, ABSTRACT NO. 621, AND THE T. SHANNON SURVEY, ABSTRACT NO. 1136 SURVEY, GRAYSON COUNTY, TEXAS, AND BEING A PORTION OF A CALLED 125 ACRE TRACT OF LAND DESCRIBED IN DEED TO PILOT POINT LAND PARTNERS, LLC, RECORDED IN INSTRUMENT NUMBER 2023-6266, OFFICIAL PUBLIC RECORDS, GRAYSON COUNTY, TEXAS (O.P.R.G.C.T.), AND BEING MORE PARTICULARLY DESCRIBED BY METES AND BOUNDS AS FOLLOWS:

BEGINNING AT THE SOUTHEAST CORNER OF SAID PILOT POINT LAND PARTNERS TRACT, SAME BEING THE SOUTHWEST CORNER OF A CALLED 4.647 ACRE TRACT OF LAND DESCRIBED IN DEED TO LONE STAR GAS COMPANY, RECORDED IN VOLUME 1028, PAGE 422, DEED RECORDS, GRAYSON COUNTY, TEXAS (D.R.G.C.T.);

THENCE ALONG THE SOUTH LINE OF SAID PILOT POINT LAND PARTNERS TRACT, THE FOLLOWING COURSES AND DISTANCES:

N 89°08'00" W, A DISTANCE OF 3.20 FEET;

S 00°55'23" W, A DISTANCE OF 1.22 FEET;

N 89°58'51" W, A DISTANCE OF 1079.65 FEET;

N 44°58'15" W, A DISTANCE OF 40.83 FEET;

S 89°59'54" W, A DISTANCE OF 269.57 FEET;

N 83°33'05" W, A DISTANCE OF 59.25 FEET TO THE APPROXIMATE CENTERLINE OF A CREEK;

THENCE NORTHWESTERLY ALONG THE APPROXIMATE CENTERLINE OF A CREEK, TO THE NORTH LINE OF SAID PILOT POINT LAND PARTNERS TRACT;

THENCE ALONG THE NORTH LINE OF SAID PILOT POINT LAND PARTNERS TRACT AND THE SOUTH LINES A TRACT OF LAND DESCRIBED AS TRACT ONE, AND TRACT TWO, IN DEED TO ORL II, INC, RECORED IN INSTRUMENT NUMBER 2022-512, O.P.R.G.C.T., THE FOLLOWING COURSES AND DISTANCES:

S 89°17'11" E, A DISTANCE OF 97.02 FEET;

S 89°08'42" E, A DISTANCE OF 180.27 FEET TO THE NORTHEAST CORNER OF SAID PILOT POINT LAND PARTNERS TRACT, AND BEING THE WEST LINE OF A CALLED 27.020 ACRE TRACT OF LAND DESCRIBED IN DEED TO 5 GUY LAND HOLDING COMPANY, LLC, RECORDED IN VOLUME 5730, PAGE 282, O.P.R.G.C.T.;

THENCE ALONG THE EAST LINE OF SAID PILOT POINT LAND PARTNERS TRACT AND THE WEST LINE OF SAID 5 GUY LAND HOLDING COMPANY LLC, TRACT, THE FOLLOWING COURSES AND DISTANCES:

S 01°15'18" W, A DISTANCE OF 1743.25 FEET

S 01°09'28" W, A DISTANCE OF 251.15 FEET TO THE **POINT OF BEGINNING**, AND **CONTAINING** 44.537 ACRES, OR 1,940,040 SQUARE FEET OF LAND MORE OR LESS.

BEARINGS ARE BASED ON THE TEXAS COORDINATE SYSTEM ESTABLISHED FOR THE NORTH CENTRAL ZONE (4202) FROM NORTH AMERICAN DATUM 1983 AS NOTED ON THE ALTA/NSPS LAND TITLE SURVEY DONE BY UNDERWOOD DRAFTING AND SURVEYING, INC. DATED 02/27/23.

"This document was prepared under 22 Texas Administrative Code §138.95, does not reflect the results of an on the ground survey, and is not to be used to convey or establish TBPELS Acts and Rules Page 97 of 109 Updated April 1, 2021 interests in real property except those rights and interests implied or established by the creation or reconfiguration of the boundary of the political subdivision for which it was prepared."

FOR PAPE DAWSON CONSULTING ENGINEERS, LLC.

MARK L. BESHEAR
REGISTERED PROFESSIONAL LAND SURVEYOR
TEXAS REGISTRATION NO. 6824
FIRM REGISTRATION NO. 10194390
PAPE DAWSON CONSULTING ENGINEERS, LLC.
6105 TENNYSON PARKWAY, SUITE 210
PLANO, TEXAS 75024
TELE. 214-420-8494
EMAIL: MBESHEAR@PAPE-DAWSON.COM
CERTIFICATION DATE: SEPTEMBER 19, 2023

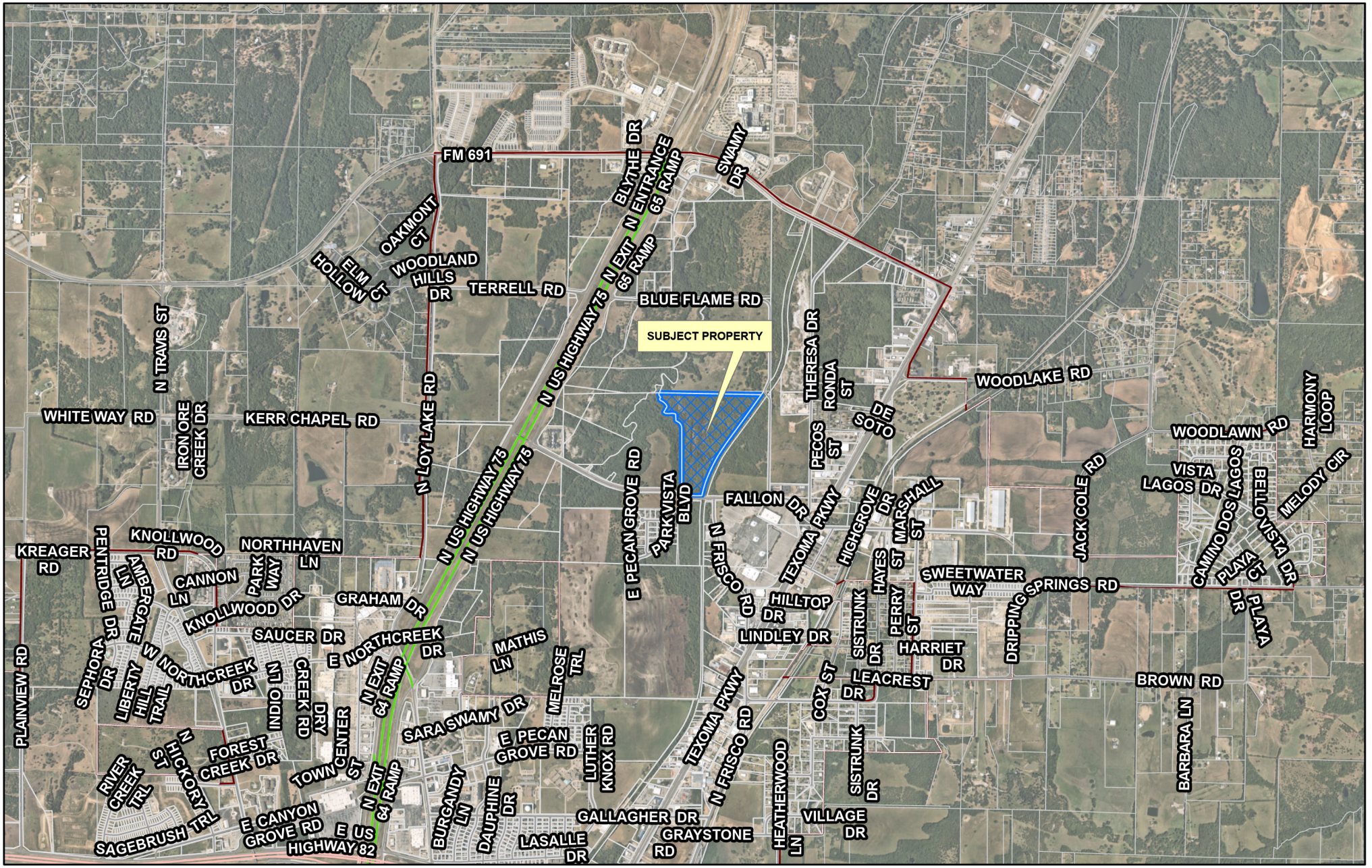

dlagrone H:\PLANNING\Public Notification KT.aprx

Sherman
CLASSIC TOWN. BROAD HORIZON.

City of Sherman, Texas
Development Services Department

CITY OF SHERMAN
LOCATION MAP
2700 BLK BLUE FLAME RD & 5100 BLK FALLON DR

N
W E
S

Date: 2/26/2024 4:54 PM

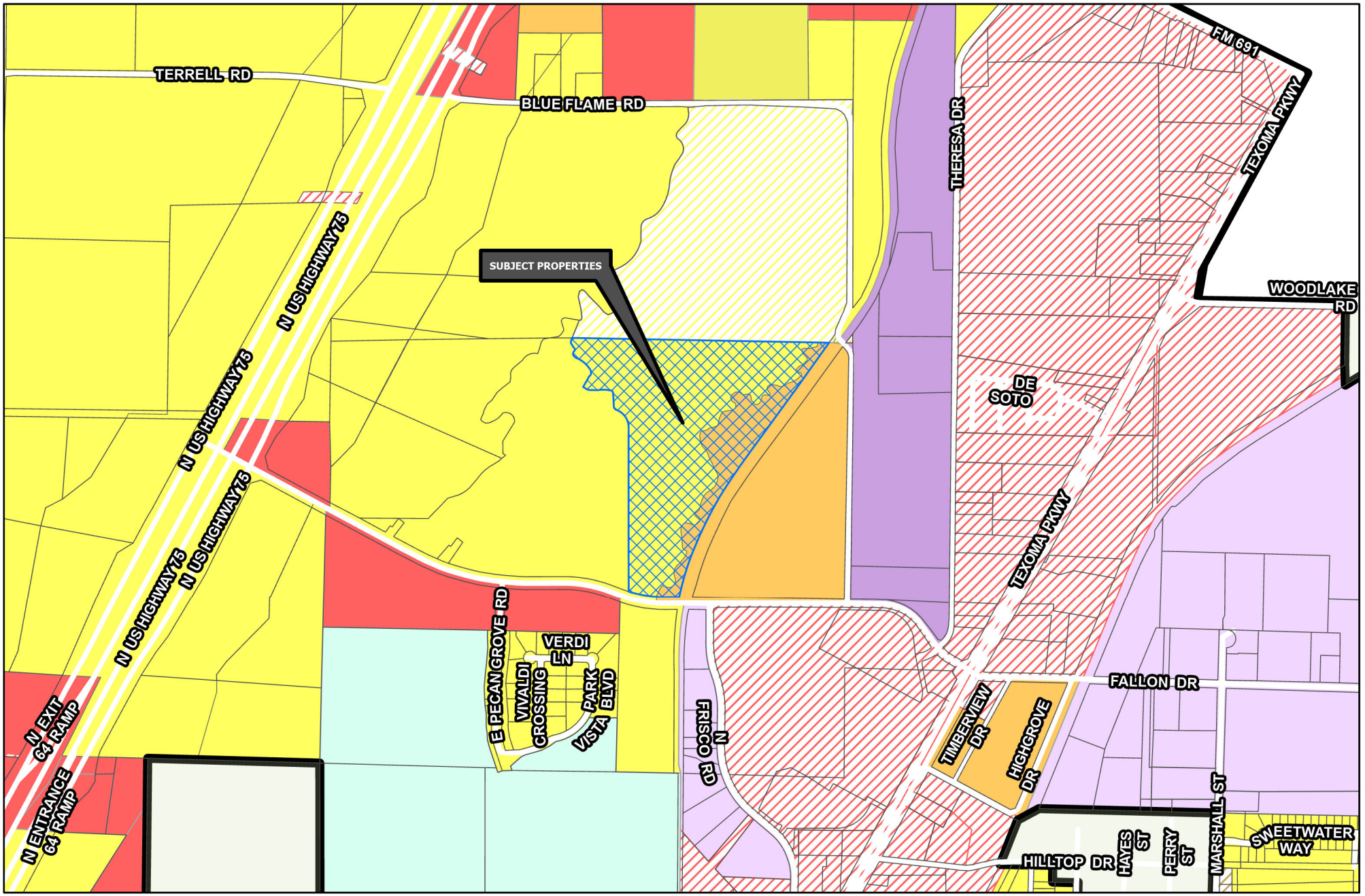

Sherman
CLASSIC TOWN. BROAD HORIZON.

Development Services Department

- R-A Residential Agricultural
- R-E Estate Residential
- R-12 Single Family Residential
- R-6 Single Family Residential
- R-5 Single Family Residential
- R-4 Patio Home Residential
- R-2F Duplex Residential
- R-TH Townhome Residential
- MF-15 Multi-Family Residential
- MF-30 Multi-Family Residential
- MH Manufactured Housing
- C-N Neighborhood Commercial
- C-O Office
- C-1 Retail Business
- C-2 General Commercial
- M-1 Light Manufacturing
- M-1.5 Medium Manufacturing
- M-2 Heavy Manufacturing
- PD Planned Development

Road Names All

Planning & Zoning

CITY OF SHERMAN
ZONING MAP
2700 BLK BLUE FLAME RD
& 5100 BLK FALLON DR

N
W E
S

Date: 2/26/2024 5:54 PM

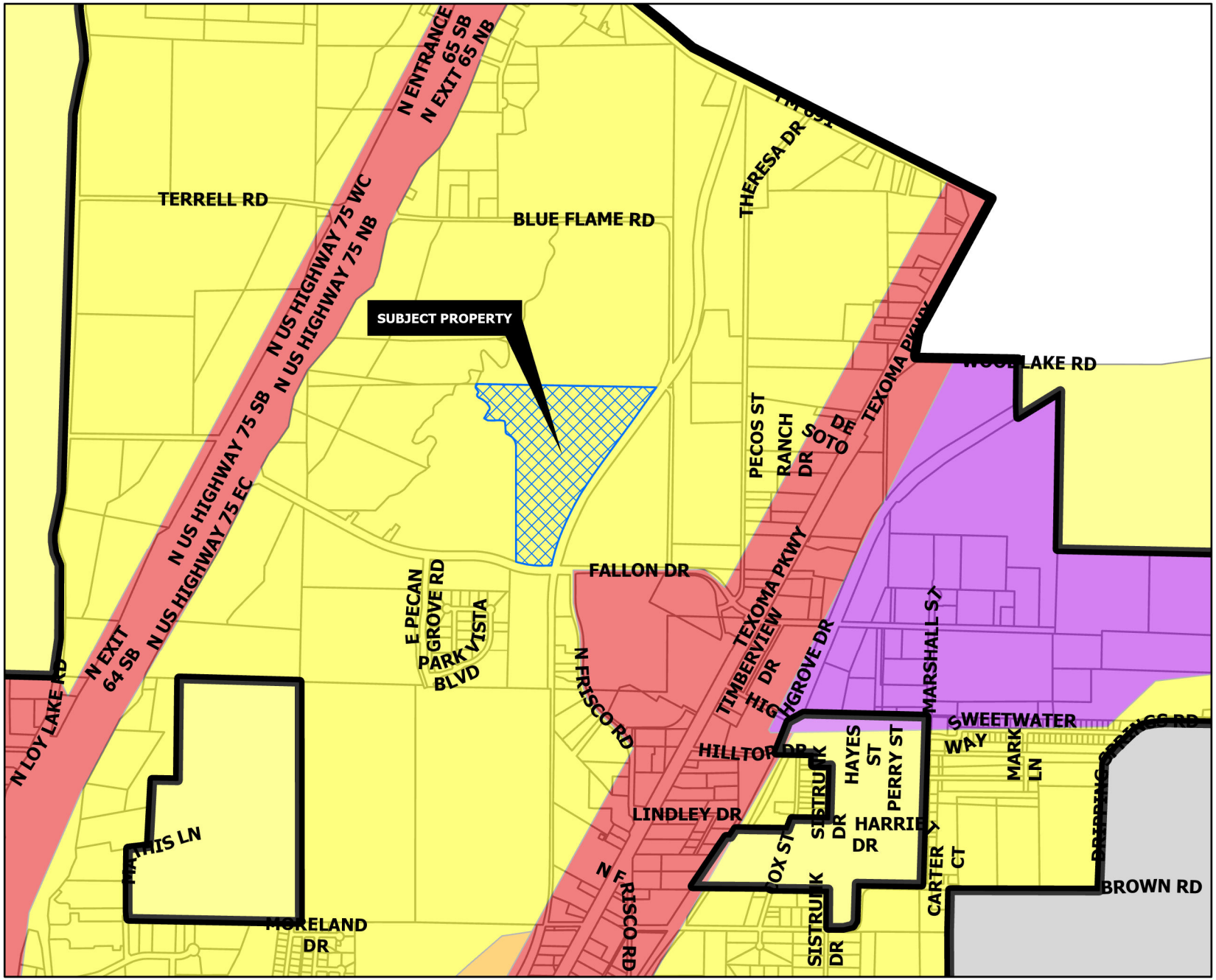

SUBURBAN NEIGHBORHOOD

Intent & Character

The Suburban Neighborhood category is intended to allow primarily single-family detached in a "complete neighborhood" setting. New subdivisions should include a mix of housing products and lot sizes. Areas of supporting local commercial should be integrated into the neighborhoods, primarily along major streets near the entrance of neighborhoods. Community amenities such as parks, trails, open spaces, and civic uses should also be included in the creation of new subdivisions. This category gives flexibility for the creation of master-planned neighborhoods that are compatible with the surrounding area.

Appropriate Land Use Types

- Single-family detached (primary land use type)
- Single-family attached (duplexes and townhomes)
- Local/neighborhood commercial and office
- Parks and open space
- Schools and civic uses

Compatible Zoning Districts

- Estate Residential
- Single-Family Residential (R-12, R-6, R-5, and R-4)
- Multi-Family Residential (MF-15 and MF-30)
- Manufactured Housing
- Neighborhood Commercial
- Planned Development

Considerations

- Street connections to existing and future developments.
- Smaller lots and denser development can serve as a transition from the local commercial areas.

Sherman
CLASSIC TOWN. BROAD HORIZON.

Development Services Department

- Agriculture/Rural
- Airport
- City Parkland
- Community Commercial
- Core Neighborhood
- Downtown
- Regional Commercial
- Suburban Neighborhood
- Technology Hub
- Planning & Zoning

CITY OF SHERMAN FUTURE LAND USE MAP 2700 BLK BLUE FLAME RD & 5100 BLK FALLON DR

N W E S

Date: 2/26/2024 4:54 PM

5100 Blk Fallon Drive

Sherman

CLASSIC TOWN. BROAD HORIZON.

NOTICE OF PROPOSED ZONING CHANGE

PROJECT #: 24-000508

Planning & Zoning Map:

FOR MORE INFORMATION CONTACT:

DEVELOPMENT SERVICES

903-892-7229

March 04, 2024 3:06 PM

Marlow, Lauren

From: Planning
To: Nathan Parrott @PD; Planning
Cc: Fernando Ceballos @PD
Subject: RE: Zoning Request

From: Nathan Parrott @PD
Sent: Wednesday, February 7, 2024 5:37 PM
To: Planning
Cc: Fernando Ceballos @PD
Subject: Re: Zoning Request

Narrative -

This tract consists of 98 acres generally located on the NWC of Fallow Drive and Blue Flame Rd.

The subject property consists of three separate zoning districts - the east and west side of the Waters of the US, north of Fallow Drive, as well as the orphaned tract to the south of Fallow.

This is a request to re-zone the west side of the northern tract - currently R6 - to TH district. The tract is about 42 acres. This is a base zoning request with no variances.

If approved, the property will develop as fee simple single-family homes per the TH district standards.

It is the current development team's intent to utilize the newly introduced tree ordinance by delivering a 20% non-disturbance area to the site as a tree survey alternative.

Thanks,

-np

Nathan Parrott, PLA | **Senior Land Planner**
Pape-Dawson Engineers
TEXAS ENGINEERING FIRM #470 | TEXAS SURVEYING FIRM #10194390

6105 Tennyson Parkway, Suite 210, Plano, TX 75024

Dallas | San Antonio | Austin | Houston | Fort Worth | New Braunfels | Corpus Christi

CONFIDENTIALITY NOTICE
This electronic mail transmission may be confidential, may be privileged, and should be read or retained only by the intended recipient. If you have received this transmission in error, please immediately notify the sender and delete it from your system.

CURRENT ZONING
R-5

FEMA 100-YR FLOODPLAIN

BUILDING: 1 UNITS: 8
BUILDING: 2 UNITS: 6
BUILDING: 3 UNITS: 6
BUILDING: 4 UNITS: 6
BUILDING: 5 UNITS: 6
BUILDING: 6 UNITS: 7
BUILDING: 7 UNITS: 5
BUILDING: 8 UNITS: 6
BUILDING: 9 UNITS: 6
BUILDING: 10 UNITS: 8
BUILDING: 11 UNITS: 7
BUILDING: 12 UNITS: 5
BUILDING: 13 UNITS: 6
BUILDING: 14 UNITS: 6
BUILDING: 15 UNITS: 6
BUILDING: 16 UNITS: 5
BUILDING: 17 UNITS: 7
BUILDING: 18 UNITS: 5
BUILDING: 19 UNITS: 5
BUILDING: 20 UNITS: 7
BUILDING: 21 UNITS: 8
BUILDING: 22 UNITS: 8
BUILDING: 23 UNITS: 8
BUILDING: 24 UNITS: 8
BUILDING: 25 UNITS: 8
BUILDING: 26 UNITS: 8
BUILDING: 27 UNITS: 7
BUILDING: 28 UNITS: 5
BUILDING: 29 UNITS: 8
BUILDING: 30 UNITS: 7
BUILDING: 31 UNITS: 6

50' ROW 26' F-F
60' ROW 30' F-F
R20 LT-F
R20 RT-F
R35
R25

STREAM CENTERLINE TO BE PROPOSED ZONING DISTRICT BOUNDRY

APPROX. WATERS OF THE U.S. STREAM CENTERLINE

EXISTING STREAM CENTERLINE TO BE ZONING DISTRICT BOUNDARY

EXISTING WASTEWATER LIFT STATION

PROPOSED NEW ACCESS DRIVE TO LIFT STATION

FALLON DRIVE
(MINOR ARTERIAL)
(86' ROW)

M.K. & T. RAILROAD (ABANDONED)

TRACT 1
CURRENT ZONING
R-6
PROPOSED ZONING
TH
±42.205 AC

TRACT 2
CURRENT ZONING
MF-30
±44.537 AC

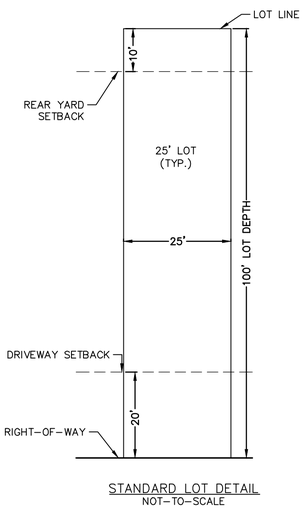

STANDARD LOT DETAIL
NOT-TO-SCALE

PROPOSED TH DISTRICT DATA SUMMARY	
CURRENT ZONING	R-6
PROPOSED ZONING	TH
TOTAL PROPERTY AREA	±42.205
TOTAL DU	204
25' LOTS	204
UNITS PER ACRE	±4.83
PARKING PROPOSED (2 ENCLOSED SPACES PER UNIT)	408
TOTAL OPEN SPACE (%)	10%

SCALE: 1"= 60'
0' 60' 120' 180'

PAPE-DAWSON ENGINEERS
6105 TENNYSON PKWY, STE 210 I PLANO, TX 75024 I 214.420.8494
TEXAS ENGINEERING FIRM #470 I TEXAS SURVEYING FIRM #10194390

SHERMAN 98 - TRACT 1
ZONING CONCEPTUAL SITE PLAN
2/5/2024

Date: Feb 05, 2024, 3:05pm User ID: seanwilliams
File: W:\projects\704\00\00\2.0 Design\2.3 Planning\2.3.2 Zoning\TRACT 1 SP EX - ALT\AutoCAD\240131-SITE PLAN.dwg

THIS DOCUMENT HAS BEEN PRODUCED FROM MATERIAL THAT WAS STORED AND/OR TRANSMITTED ELECTRONICALLY AND MAY HAVE BEEN INADVERTENTLY ALTERED. RELY ONLY ON FINAL HARDCOPY MATERIALS BEARING THE CONSULTANT'S ORIGINAL SIGNATURE AND SEAL.

APPROXIMATE LOCATION OF FEMA 100-YR FLOODPLAIN

EXISTING STREAM CENTERLINE TO BE ZONING DISTRICT BOUNDARY

APPROX. WATERS OF THE U.S STREAM CENTERLINE

EXISTING WASTEWATER LIFT STATION

PROPOSED NEW ACCESS TO LIFT STATION

FALLON DRIVE (MINOR ARTERIAL (86' ROW)

SITE DATA

25' x 100'	204 LOTS
CURRENT ZONING	R-6
PROPOSED ZONING	TH
TOTAL PROPERTY AREA	± 42.205
TOTAL DU	204
MINIMUM OPEN SPACE	10%

Sherman 98 - Tract 1
±42 AC TRACT

LAND USE ASSIGNMENT EXHIBIT

0 30 60 120

Scale: 1"=60'

N

THE INFORMATION SHOWN IS BASED ON THE BEST INFORMATION AVAILABLE AND IS SUBJECT TO CHANGE WITHOUT NOTICE. THIS PLAN IS CONCEPTUAL IN NATURE AND THEREFORE INTENDED FOR ILLUSTRATIVE PURPOSES ONLY. IT IS NOT TO BE USED FOR PERMITTING OR CONSTRUCTION.

JANUARY 29TH, 2024

PAPE-DAWSON ENGINEERS

SHERMAN CITY COUNCIL
Agenda Communication Form

City Council Regular Meeting Agenda Item No. F.3.

Meeting Date: 4/15/2024

Prepared By: Rob Rae, Developmental Services Director

Approved By: Robby Hefton, City Manager

Caption:

INTRODUCTION AND PUBLIC HEARING OF ORDINANCE NO. 6712

An Ordinance Of The City Council Of The City Of Sherman, Texas, Amending The Code Of Ordinances Of The City Of Sherman, Texas, Chapter 14 (Zoning Ordinance), Section 14.02.010 (R-TH Townhome Residential District), Section 14.02.012 (MF-30 Multifamily Residential District), Article 14.07 (Signs), Section 14.08.001 (Definitions), Article 14.10 (Use Chart); Modifying Certain Existing Regulations And Prescribing New Regulations Relating To Townhome And Multifamily Building Separation, Multifamily and Single-Family Sign Regulations, And Changes to the Use Chart Regarding Billboards and Travel Trailer Parks; Providing A Penalty Clause With A Maximum Fine Of $2,000, Savings/Repealing Clause, Severability Clause And An Effective Date; Providing For The Publication Of The Caption Hereof

Issue:

An Ordinance Of The City Council Of The City Of Sherman, Texas, Amending The Code Of Ordinances Of The City Of Sherman, Texas, Chapter 14 (Zoning Ordinance), Section 14.02.010 (R-TH Townhome Residential District), Section 14.02.012 (MF-30 Multifamily Residential District), Article 14.07 (Signs), Section 14.08.001 (Definitions), Article 14.10 (Use Chart); Modifying Certain Existing Regulations And Prescribing New Regulations Relating To Townhome And Multifamily Building Separation, Multifamily and Single-Family Sign Regulations, And Changes to the Use Chart Regarding Billboards and Travel Trailer Parks

Background:

Increased development in the City of Sherman has spurred developers and home builders to construct development entrance signs. These development entrance signs call attention to the subdivision at key points of access to the minor and major thoroughfares.

In addition, staff is recommending to update a few outstanding issues in the zoning ordinance specified below:

- Update Townhome interior side yard setback from 15' to 6'. The current 15' regulation would require that townhome structures would need to be 30' separated on interior lots, which is not reasonable for townhome development.
- Update Multifamily (MF-30) zoning district minimum building separation to 15'.
- Update single-family zoning district sign regulations to provide details for development entrance signs, and educational and institutional signs.
- Update multi-family zoning district sign regulations to provide details for development entrance signs, and educational and institutional signs. Clarify language for wall signs.
- Update non-residential zoning district sign regulations to provide details for development entrance signs, freestanding signs, and wall signs.
- Update use chart to include Billboards and Travel Trailer Parks as an SUP in certain districts.

Origination:
Development Services

Financial Consideration:
None

Staff Recommendation:
At the March 19, 2024 regular meeting, the Planning and Zoning Commission voted 6/0 to recommend to City Council that the Other Business be approved. **The proposed use is compatible with the City of Sherman Comprehensive Plan. Staff recommends that Council approve this item.**

Alternatives:
The City Council could deny the request.

Attachments:
1. Ordinance No. 6712

ORDINANCE NO. 6712

AN ORDINANCE OF THE CITY COUNCIL OF THE CITY OF SHERMAN, TEXAS, AMENDING THE CODE OF ORDINANCES OF THE CITY OF SHERMAN, TEXAS, CHAPTER 14 (ZONING ORDINANCE), SECTION 14.02.010 (R-TH TOWNHOME RESIDENTIAL DISTRICT), SECTION 14.02.012 (MF-30 MULTIFAMILY RESIDENTIAL DISTRICT), ARTICLE 14.07 (SIGNS), SECTION 14.08.001 (DEFINITIONS), ARTICLE 14.10 (USE CHART); MODIFYING CERTAIN EXISTING REGULATIONS AND PRESCRIBING NEW REGULATIONS RELATING TO TOWNHOME AND MULTIFAMILY BUILDING SEPARATION, MULTIFAMILY AND SINGLE-FAMILY SIGN REGULATIONS, AND CHANGES TO THE USE CHART REGARDING BILLBOARDS AND TRAVEL TRAILER PARKS; PROVIDING A PENALTY CLAUSE WITH A MAXIMUM FINE OF $2,000, SAVINGS/REPEALING CLAUSE, SEVERABILITY CLAUSE AND AN EFFECTIVE DATE; PROVIDING FOR THE PUBLICATION OF THE CAPTION HEREOF; FINDING AND DETERMINING THAT THE MEETING AT WHICH THIS ORDINANCE IS PASSED WAS NOTICED AND IS OPEN TO THE PUBLIC AS REQUIRED BY LAW

WHEREAS, the City Council of the City of Sherman, Texas ("City Council") finds that it is necessary to amend Chapter 14 (Zoning Ordinance) of the Code of Ordinances, City of Sherman, Texas ("Code of Ordinances") for the purpose of prescribing regulations relating to Townhome and Multifamily Building Separation, Multifamily and Single-Family Sign Regulations, and Changes to the Use Chart Regarding Billboards and Travel Trailer Parks; and

WHEREAS, the City of Sherman ("City" or "Sherman") has complied with all legal notices and public hearings as required by law; and

WHEREAS, the City Council finds that adopting this Ordinance promotes the health, safety and morals of Sherman and is in the best interest of the citizens of Sherman.

NOW, THEREFORE, BE IT ORDAINED BY THE CITY COUNCIL OF THE CITY OF SHERMAN, TEXAS:

SECTION 1: Findings Incorporated. The findings set forth above are incorporated into the body of this Ordinance as if fully set forth herein.

SECTION 2: Amendment to the Code of Ordinances, Chapter 14 (Zoning Ordinance). Section 14.02.010 (R-TH Townhome Residential District), Section 14.02.012 (MF-30 Multifamily Residential District), Article 14.07 (Signs), Section 14.08.001 (Definitions), Article 14.10 (Use Chart) of the Code of Ordinances are amended as follows[1]:

"**ARTICLE 14.02 ZONING DISTRICTS**

[1] Deletions are evidenced by ~~strikethrough~~; additions are *italicized*.

Sec. 14.02.010 R-TH (Townhome Residential) District

…

(1) Minimum requirements for lot area, width and setback.

…

Interior Side Setback: *6'* ~~15'~~

…

Sec. 14.02.012 MF-30 (Multifamily Residential) District

…

(4) Other regulations.

…

(I) Minimum building separation. A minimum building separation between all buildings on the lot shall be ~~ten~~ *fifteen* (15) feet.

…

ARTICLE 14.07 SIGNS

…

Sec. 14.07.007 Single-Family Residential Signs

The following signs shall be permitted in Single-Family Residential Zoning Districts:

(a) ~~(1)~~ One (1) sign not exceeding one and one-half (1½) square feet in area, indicating only the name and address of the occupant, for each residential unit.

(b) Temporary Signs.

(1) A property owner or lessee may place one non-illuminated temporary sign with a sign face no larger than six (6) square feet and said sign may be located on property with owner consent when the property is for sale or lease or if an individual unit or units is for sale or lease.

(2) Undeveloped Real Estate Signs. A property owner or lessee may place one non-illuminated temporary sign per right-of-way frontage with a sign face no larger than 32 square feet and said sign may be located on property with owner consent when the property is for sale or lease or if an individual unit or units is for sale or lease.

(3) Such signs shall not require a sign permit.

~~(2) One (1) unlighted sign not exceeding sixteen (16) square feet in area on each development lot pertaining to the prospective sale or rental of the property on which it is located.~~

~~(3) Conditional uses. Sign requirements for all conditional uses shall be set by the Board of Adjustment, and in no case shall the requirements exceed the requirements for that use or similar type uses in the district in which the use is ordinarily permitted.~~

(c) Subdivision Development Entrance Signs.

(1) Subdivision development signs are permitted at the entrance of the development that are bisected by one or more publicly dedicated streets. They may be freestanding or constructed on a masonry perimeter fence.

(2) The maximum sign area shall be 32 square feet per side. The calculation of the sign area shall only include the area with characters, letters, and illustrations.

(3) The maximum height of the sign structure shall not exceed six (6) feet. Architectural columns shall not exceed eight (8) feet in height and not to exceed ten (10) percent of the length of the sign structure.

(4) Signs may be located on a platted lot at each corner of the intersection of an entrance street or within the median of an entrance street. Signs located within the median shall be reviewed and approved by the City Engineer prior to permit issuance and construction.

(5) Subdivision Development Entrance Signs shall be constructed of a landscaped, stone-base feature.

(6) Development entrance signs shall not obstruct the view of turning traffic.

(7) Approval of a sign encroachment agreement is required before a development entrance sign may be constructed within any easements. Only signs with a slab foundation will be permitted within a utility easement. Signs requiring piers will not be permitted within a utility easement.

(8) Signs may be back lighted, indirect lighted, internal lighted or lighted by spots. No digital/LED signs are permitted.

(9) Such signs shall require a sign permit.

(d) Educational and Institutional Signs in Single-Family Residential Zoning Districts.

(1) Institutional and educational uses permitted in single-family zoning districts are allowed one freestanding sign per right-of-way frontage.

(2) The maximum sign area shall be 32 square feet per side and shall not exceed eight (8) feet in height.

(3) Wall signs are permitted subject to Sec. 14.07.009(a).

(4) Minimum setback for signs shall be five (5) feet from the property line. Signs shall not obstruct the view of turning traffic. Variances to the sight distance requirements may be approved by the City Engineer, subject to specific engineering criteria such as design speed, traffic control, and other site conditions.

(5) Approval of a sign encroachment agreement is required before a sign may be constructed within any easements. Only signs with a slab foundation will be permitted within a utility easement. Signs requiring piers will not be permitted within a utility easement.

(6) Such signs shall require a sign permit.

Sec. 14.07.008 Multi-Family Residential Signs

The following signs shall be permitted in the Multi-Family Residential Zoning Districts:

(a) ~~(1)~~ *Wall Signs.* ~~Primary identification signs, each having an area not exceeding ten (10) percent of the area of one (1) wall or five (5) percent of the area of two (2) walls, where applicable, or fifty (50) square feet, whichever is less.~~

(1) The maximum area of any wall sign shall be 150 square feet. In no case shall a wall

sign exceed 10% of any single wall.

(2) Informational type signs, each not exceeding ten (10) square feet in area per building.

(3) All signs shall be placed flat against the wall of a building and shall not project above the parapet wall or side wall of the building.

(4) All signs, except for the informational signs, shall identify the development by name and address only. Signs may be back lighted, indirect lighted, internal lighted or lighted by spots.

(5) A sign permit is required for wall signs exceeding 32 square feet in sign area.

(b) *Temporary Signs.*

(1) A property owner or lessee may place one non-illuminated temporary sign with a sign face no larger than six (6) square feet and said sign may be located on property with owner consent when the property is for sale or lease or if an individual unit or units is for sale or lease.

(2) Undeveloped Real Estate Signs. A property owner or lessee may place one non-illuminated temporary sign per right-of-way frontage with a sign face no larger than 32 square feet and said sign may be located on property with owner consent when the property is for sale or lease or if an individual unit or units is for sale or lease.

(3) Such signs shall not require a sign permit.

(c) Multi-family Development Entrance Signs.

(1) Multi-family development signs are permitted at each entrance of the development. They may be freestanding or constructed on a masonry perimeter fence.

(2) The maximum size area shall be 32 square feet per side. The calculation of the sign area shall only include the area with characters, letters, and illustrations.

(3) The maximum height of the sign structure shall not exceed six (6) feet.

(4) Freestanding signs shall be setback a minimum of five (5) feet from the property line.

(5) Multi-family Development Entrance Signs shall be constructed of a landscaped, stone-base feature, or compatible with the design materials and colors of the building(s) on the site as approved by the Development Services Director.

(6) Development entrance signs shall not obstruct the view of turning traffic.

(7) Approval of a sign encroachment agreement is required before a development entrance sign may be constructed within any easements. Only signs with a slab foundation will be permitted within a utility easement. Signs requiring piers will not be permitted within a utility easement.

(8) Signs may be back lighted, indirect lighted, internal lighted or lighted by spots. No digital/LED signs are permitted.

(9) Such signs shall require a sign permit.

(d) Educational and Institutional Signs in Multi-family Residential Zoning Districts.

(1) Institutional and educational uses permitted in multi-family zoning districts are allowed one freestanding sign per right-of-way frontage.

(2) The maximum sign area shall be 32 square feet per side and shall not exceed eight (8) feet in height.

(3) Wall signs are permitted subject to the regulations Sec. 14.07.009(a).

(4) Minimum setback for signs shall be five (5) feet from the property line. Signs shall not obstruct the view of turning traffic. Variances to the sight distance requirements may be approved by the City Engineer, subject to specific engineering criteria such as design speed, traffic control, and other site conditions.

(5) Approval of a sign encroachment agreement is required before a sign may be constructed within any easements. Only signs with a slab foundation will be permitted within a utility easement. Signs requiring piers will not be permitted within a utility easement.

(6) Such signs shall require a sign permit.

Sec. 14.07.009 *Non-Residential* ~~Freestanding~~ Signs

The following signs shall be permitted in the Non-Residential Zoning Districts:

(a) *Wall Signs.* ~~One (1) freestanding sign for each freestanding building, not to exceed one (1) freestanding sign per development lot, except as indicated below.~~

(1) The maximum area of any wall sign shall be three hundred (300) square feet. In no case shall a wall sign exceed 20% of any single wall.

(2) A sign permit is required for all wall signs.

(b) Temporary Signs.

(1) A property owner or lessee may place one non-illuminated temporary sign with a sign face no larger than six (6) square feet and said sign may be located on property with owner consent when the property is for sale or lease or if an individual unit or units is for sale or lease.

(2) Undeveloped Real Estate Signs. A property owner or lessee may place one non-illuminated temporary sign per right-of-way frontage with a sign face no larger than 32 square feet and said sign may be located on property with owner consent when the property is for sale or lease or if an individual unit or units is for sale or lease.

(3) Such signs shall not require a sign permit.

~~(b) C-N, C-O, C-1, C-2, M-l, M-1.5, and M-2 Districts with frontage on a thoroughfare.~~

(c) Freestanding Signs. Only one freestanding sign is permitted per platted lot, with the exception of corner lots. Corner lots are permitted to have no more than two signs. The two permitted signs shall not be located on the same lot line. Area. ~~The area of a freestanding sign shall not exceed three hundred (300) square feet.~~

(1) Pole or pylon signs.

(A) Only one pole or pylon sign is permitted per platted lot only at locations fronting a highway or a major arterial as designated on the Thoroughfare Plan Map.

(B)~~(d)~~ Height. Sign height shall not exceed fifty (50) feet. ~~above the centerline of the thoroughfare, access road or facing street.~~ *Height is measured from the grade of the fronting street.*

(C) Area. The area of a sign shall not exceed 300 square feet.

(D) Minimum Setback. The setback of the sign shall be 25 feet measured from the closest edge of the sign to the property line.

(2) Monument signs.

(A) Only one monument sign is permitted per platted lot on any non-residential

zoned property, with the exception of corner lots. Corner lots are permitted to have two signs. The two permitted signs shall not be located on the same lot line.

(B) Monument signs shall include a landscaped, stone-based feature. All monument sign bases shall be constructed of the same material as the front building façade on the same site.

(C) Signs may have a maximum 65 square foot sign area and shall not exceed ten (10) feet in height. Height is measured from the grade of the fronting street.

(D) Minimum setback for signs shall be ten (10) feet from the property line. Monument signs shall not obstruct the view of turning traffic. Variances to the sight distance requirements may be approved by the City Engineer, subject to specific engineering criteria such as design speed, traffic control, and other site conditions.

(E) Approval of a sign encroachment agreement is required before a freestanding sign may be constructed within any easements. Only signs with a slab or approved spread footing foundation will be permitted within a utility easement. Signs requiring piers will not be permitted within a utility easement.

~~(e) Signs at commercial locations that are not on a highway or major thoroughfare may have a maximum height of twelve (12) feet and a maximum face area of thirty-two (32) square feet.~~

(d)~~(f)~~ Nonconforming signs. Where a lawful sign exists at the effective date of adoption or amendment of this article that could not be erected under the terms of this ordinance, as amended, such sign may be continued so long as it remains otherwise lawful, subject to the following provisions:

(1) No such sign may be enlarged or altered in any way which increases its nonconformity; and

(2) Should such sign be moved for any reason for any distance whatever, it shall thereafter conform to the regulations as set forth in Subsection 14.07.009 *(a)* ~~(1)~~ through *(c)* ~~(5)~~ above.

~~(g) Temporary banners may be placed on existing conforming freestanding signs. Total face are of the existing sign and the banner combined shall not exceed three hundred (300) square feet. Banners shall be securely fastened at all times to the structure.~~

(e) Non-residential Development Entrance Signs.

(1) Non-residential development signs are freestanding signs that are permitted at the entrance of the development that are bisected by one or more publicly dedicated streets.

(2) The maximum size shall be 32 square feet per sign with a maximum height of six (6) feet.

(3) Signs may be located on a platted lot at each corner of the intersection of an entrance street or within the median of an entrance street. Signs located within the median shall be reviewed and approved by the City Engineer prior to permit issuance and construction.

(4) Non-residential development signs shall be constructed of a landscaped, stone-base feature.

(5) Development entrance signs shall not obstruct the view of turning traffic.

(6) Approval of a sign encroachment agreement is required before a development entrance sign may be constructed within any easements. Only signs with a slab foundation will be permitted within a utility easement. Signs requiring piers will not be permitted within a utility easement.

(7) Signs may be back lighted, indirect lighted, internal lighted or lighted by spots. No digital/LED signs are permitted.

(8) Such signs shall require a sign permit.

Sec. 14.07.010 Governmental Signs

Governmental signs not exceeding thirty-two (32) square feet in area and not exceeding *eight (8)* ~~ten (10)~~ feet in height, shall be permitted. Such standards shall not apply where state or federal regulations are in conflict with these standards.

…

Sec. 14.07.013 *Reserved* ~~Wall Signs~~

~~(1) The maximum area of any wall sign shall be three hundred (300) square feet. In no case shall a wall sign exceed 20% of any single wall.~~

~~(2) Temporary banners may be placed on existing buildings. Total area of the banner and existing sign shall not exceed three hundred (300) square feet. Banners shall be securely fastened at all times flat against the structure.~~

…

ARTICLE 14.08 DEFINITIONS

Sec. 14.08.001 Definitions.

…

Sign, Billboard. A sign which directs attention to a business, product, service, or entertainment conducted, sold, or offered at a location other than on the premises on which the sign is located.

Sign, Development Entrance. A permanent on-premises sign identifying a vehicular entrance to a residential subdivision, residential complex, or commercial development.

Sign, Educational and Institutional. A sign, which by symbol or name, identifies an educational or institutional use permitted within a residential zoning district and may also provide the announcement of services or activities to be held therein.

…

Sign, Pole. A freestanding sign that is affixed, attached, or erected on a pole that is not itself an integral part of or attached to a building or structure.

…

Sign, Pylon. A freestanding sign other than a pole sign, permanently affixed to the ground by supports, but not having the appearance of a solid base.

…

Sign, Undeveloped Real Estate. A temporary sign that relates to the sale, lease, or rental of undeveloped property on a site.

…

Travel Trailer Park. A parcel of land reserved for the location of recreational vehicles, including buildings and sites set aside for group camping and similar recreational vehicles.

…

ARTICLE 14.10 USE CHART

Sec. 14.10.001 Use Chart.

…

(d) Use Chart. …

[The remainder of this page intentionally left blank.]

Use Type	R-A	R-E	R-12	R-6	R-5	R-4	R-TH	R-2F	MF-15	MF-30	MH	C-N	C-O	C-1	C-2	M-1	M-1.5	M-2
…																		
Commercial, Retail, and Service Uses																		
…																		
Billboard														SUP	SUP	SUP	SUP	SUP
…																		
Travel Trailer Park											*SUP*			*SUP*	*SUP*			
…																		

[The remainder of this page intentionally left blank.]

…”

SECTION 3: Penalty. Any person, firm, corporation or entity violating any provision of this Ordinance, as it exists or may be amended, shall be deemed guilty of a misdemeanor, and on conviction thereof, shall be fined in an amount not exceeding TWO THOUSAND AND NO/100 DOLLARS ($2,000.00). A violation of any provision of this Ordinance shall constitute a separate violation for each calendar day in which it occurs. The penal provisions imposed under this Ordinance shall not preclude Sherman from filing suit to enjoin the violation. Sherman retains all legal rights and remedies available to it pursuant to local, state and federal law.

SECTION 4: Severability. Should any section, subsection, sentence, clause or phrase of this Ordinance be declared unconstitutional and/or invalid by a court of competent jurisdiction, it is expressly provided that any and all remaining portions of this Ordinance shall remain in full force and effect. The City Council hereby declares that it would have passed this Ordinance, and each section, subsection, clause or phrase thereof, regardless of whether any one or more sections, subsections, sentences, clauses or phrases is declared unconstitutional and/or invalid.

SECTION 5: Repealing/Savings. The Zoning Ordinance shall remain in full force and effect, save and except as amended by this or any other Ordinance. All provisions of any ordinance in conflict with this Ordinance are hereby repealed to the extent they are in conflict, but such repeal shall not abate any pending prosecution for violation of the repealed ordinance, nor shall the repeal prevent a prosecution from being commenced for any violation if occurring prior to the repeal of the ordinance. Any remaining portions of said ordinances shall remain in full force and effect.

SECTION 4: Open Meeting. The meeting at which this Ordinance was introduced and passed was open to the public and that public notice of the time, place and purpose of said meeting was given all as required by law.

SECTION 5: Effective Date; Publication. This Ordinance shall become effective from and after its adoption and publication as required by law. The City Clerk is directed to publish the caption of this Ordinance as required by law.

DULY PASSED AND APPROVED BY THE CITY COUNCIL OF THE CITY OF SHERMAN, TEXAS.

INTRODUCED on this the 15th day of April 2024.

ADOPTED on this the 15th day of April 2024.

EFFECTIVE DATE on this the 15th day of April 2024.

CITY OF SHERMAN, TEXAS

BY: _____
DAVID PLYLER, MAYOR

ATTEST:

BY: _____
LINDA ASHBY, CITY CLERK

APPROVED AS TO FORM:
THE LAW FIRM OF ABERNATHY,
ROEDER, BOYD & HULLETT, P.C.

BY: _____
RYAN D. PITTMAN, CITY ATTORNEY

SHERMAN CITY COUNCIL
Agenda Communication Form

City Council Regular Meeting Agenda Item No. F.4.

Meeting Date: 4/15/2024

Prepared By: Rob Rae, Developmental Services Director

Approved By: Robby Hefton, City Manager

Caption:

INTRODUCTION AND PUBLIC HEARING OF ORDINANCE NO. 6713

Amending The Code Of Ordinances Of The City Of Sherman, Texas, Chapter 14 (Zoning Ordinance), Section 14.03.007 (Blalock Commercial Overlay District); Modifying Certain Existing Regulations And Prescribing New Regulations Relating To The Blalock Commercial Overlay District And Expanding The Blalock Commercial Overlay District Boundaries; Providing A Penalty Clause With A Maximum Fine Of $2,000, Savings/Repealing Clause, Severability Clause And An Effective Date; Providing For The Publication Of The Caption Hereof;

Issue:

Consideration of New Regulations Relating To The Blalock Commercial Overlay District And Expanding The Blalock Commercial Overlay District Boundaries.

Background:

The Blalock Commercial Overlay District was established on February 15th, 2010 to provide for consistent development standards in the vicinity of U.S. Highway 75 and F.M. 1417 Heritage Parkway. Minor updates occurred for this overlay district on May 17th, 2021 (Ord. No. 6385), December 5th, 2022 (Ord. No. 6555), and June 26th, 2023 (Ord. No. 6597).

This update includes the following major recommendations:

- Expand the overlay district boundary to include an additional 100 acres directly to the west of the current overlay district boundary.
- Update the setback regulations to reflect current development
- Modify architectural standards to be consistent with other overlay district requirements in the City of Sherman
- Modify regulations for freestanding signs, wall signs, and development entrance signs.

Origination:

Development Services

Financial Consideration:

Staff Recommendation:

At the February 20, 2024 regular meeting, the Planning and Zoning Commission voted 5/2 to recommend to City Council that the New Regulations Relating To The Blalock Commercial Overlay District And Expanding The Blalock Commercial Overlay District Boundaries be approved and striking Multi-Family Residential from the

Ordinance for The Blalock Commercial Overlay District. **The proposed use is compatible with the City of Sherman Comprehensive Plan. Staff recommends that Council approve this item.**

Alternatives:
The City Council could deny the request.

Attachments:
1. Ordinance No. 6713
2. Exhibit A
3. Zone Change Support Letter

ORDINANCE NO. 6713

AN ORDINANCE OF THE CITY COUNCIL OF THE CITY OF SHERMAN, TEXAS, AMENDING THE CODE OF ORDINANCES OF THE CITY OF SHERMAN, TEXAS, CHAPTER 14 (ZONING ORDINANCE), SECTION 14.03.007 (BLALOCK COMMERCIAL OVERLAY DISTRICT); MODIFYING CERTAIN EXISTING REGULATIONS AND PRESCRIBING NEW REGULATIONS RELATING TO THE BLALOCK COMMERCIAL OVERLAY DISTRICT AND EXPANDING THE BLALOCK COMMERCIAL OVERLAY DISTRICT BOUNDARIES; PROVIDING A PENALTY CLAUSE WITH A MAXIMUM FINE OF $2,000, SAVINGS/REPEALING CLAUSE, SEVERABILITY CLAUSE AND AN EFFECTIVE DATE; PROVIDING FOR THE PUBLICATION OF THE CAPTION HEREOF; FINDING AND DETERMINING THAT THE MEETING AT WHICH THIS ORDINANCE IS PASSED WAS NOTICED AND IS OPEN TO THE PUBLIC AS REQUIRED BY LAW

WHEREAS, the City Council of the City of Sherman, Texas ("City Council") finds that it is necessary to amend Chapter 14 (Zoning Ordinance) of the Code of Ordinances, City of Sherman, Texas ("Code of Ordinances") for the purpose of modifying certain existing regulations and prescribing new regulations relating to the Blalock Commercial Overlay District; and

WHEREAS, the City of Sherman ("City" or "Sherman") has complied with all legal notices and public hearings as required by law; and

WHEREAS, the City Council finds that adopting this Ordinance promotes the health, safety and morals of Sherman and is in the best interest of the citizens of Sherman.

NOW, THEREFORE, BE IT ORDAINED BY THE CITY COUNCIL OF THE CITY OF SHERMAN, TEXAS:

SECTION 1: Findings Incorporated. The findings set forth above are incorporated into the body of this Ordinance as if fully set forth herein.

SECTION 2: Amendment to the Code of Ordinances, Chapter 14 (Zoning Ordinance). Section 14.03.007 (Blalock Commercial Overlay District) of the Code of Ordinances is amended as follows[1]:

"**ARTICLE 14.03 OVERLAY ZONING DISTRICTS**

Sec. 14.03.007 Blalock Commercial Overlay District

(a) Introduction.

(1) The development of the Blalock Commercial Overlay District offers significant

[1] Deletions are evidenced by ~~strikethrough~~; additions are *italicized*.

economic opportunities for the city and its citizens. It is imperative that this unique entry to the city be protected by quality development standards. This district is in compliance with the comprehensive master plan future land use map and the implementation section: Prudent use of development regulations.

~~(2) Careful planning and foresight is important to achieve and provide the greatest benefits for the city. The intent of the Blalock Commercial Overlay District Standards is to ensure the area develops in a manner that provides an attractive appearance and assures compatible land uses within consistent design guidelines.~~

~~(3) The Blalock Commercial Overlay District will consist of highway frontage in the Blalock Industrial Park at Heritage Parkway and nearby tracts that form the south gateway to the city.~~

(2) The Blalock Commercial Overlay District is intended to protect the aesthetic and visual character of the district.

(3) The Blalock Commercial Overlay District is intended to provide a location for a mix of land uses including retail, service, and industrial activities as well as multifamily in the district.

(4) Any other standards, regulations or requirements within this overlay shall override those in the base zoning district in the event of a conflict not addressed above. Standards, regulations or requirements of the base zoning district not augmented or otherwise supplemented by this overlay will continue to prevail.

~~(b) *Intent.* To create a regional image for retail/commercial developments within and around the Blalock Commercial Overlay District. These guidelines are to help owners, developers, designers, architects, and builders by providing design criteria that will coordinate the image, character and quality of the entire development and ensure the aesthetic value and visual appeal of non-residential land uses in the overlay district.~~

~~(1) Multiple buildings in commercial centers: To achieve unity between buildings in a commercial development of more than one building, all buildings in such a development shall employ a similar theme, and color palette.~~

~~(c) *Applicability.* These provisions shall apply to all retail and commercial development within Blalock Commercial Overlay District.~~

(~~b~~*c*) *Boundary*. ~~Establishment of Blalock Commercial Overlay District.~~ *The Blalock Commercial Overlay District is established on the property depicted and described in Exhibit A, attached hereto and incorporated herein by reference.* ~~For the purpose of promoting the public health, safety, morals and general welfare in the city, there is hereby, for the purposes of convenience, denominated "Blalock Commercial Overlay District" the following area described by metes and bounds as follows:~~

~~SITUATED in the City of Sherman, County of Grayson, State of Texas, being a part of the PRESTON KITCHENS SURVEY, Abstract No. 667, the SHERROD DUNMAN SURVEY,~~

Abstract No. 329 and the ELIZABETH JONES SURVEY, Abstract No. 625 and being more particularly described by metes and bounds as follows to-wit:

BEGINNING at the southeast corner of a 97.64 acre tract of land described in tract one in deed from Rabin Worldwide, Inc., et al to Actichem L.P., dated June 21, 2005, recorded in Volume 3880, Page 138, Official Public Records, Grayson County, Texas, the Southwest corner of a 130.48 acre tract of land described in deed from Rabin Worldwide, Inc., et al to Shafer Plaza XLII, Ltd., dated March 28, 2005, recorded in Volume 3842, Page 40, Official Public Records, Grayson County, Texas, on the North right-of-way line of F.M. Highway No. 1417;

THENCE in a Northerly direction with the East line of said Actichem 97.64 acre tract, the West line of said Shafer 130.48 acre tract, the following calls and distances:

North 17 deg. 57 min. 51 sec. West, a distance of 541.99 feet;

North 11 deg. 37 min. 37 sec. East, a distance of 541.99 feet;

North 44 deg. 54 min. 41 sec. West, a distance of 493.45 feet;

North 13 deg. 29 min. 05 sec. West, a distance of 2190.59 feet to the Northeast corner of said 97.64 acre tract, a Southeast corner of a 1140.06 acre tract of land described in Tract One in deed from W. C. Pickens, Jr. to Sherman Hills County Club, Ltd., dated May 17, 2002, recorded in Volume 3265, Page 890, Official Public Records, Grayson County, Texas;

THENCE North 14 deg. 26 min. 23 sec. West, continuing with the West line of said Shafer 130.48 acre tract, an East line of said 1140.06 acre tract, a distance of 468.97 feet to the Northwest corner of said 130.48 acre tract, an ell corner of said 1140.06 acre tract;

THENCE North 75 deg. 38 min. 03 sec. East, with a North line of said 130.48 acre tract, a South line of said 1140.06 acre tract, a distance of 867.16 feet to an ell corner of the herein described tract, at a point 500 feet West of and perpendicular to the West right-of-way line of U.S. Highway No. 75; THENCE in a Northerly direction 500 feet West of and parallel with the West right-of-way line of said U.S. Highway No. 75, the following calls and distances:

With a curve to the right having a radius of 3945.71 feet, (chord bears North 04 deg. 35 min. 05 sec. East, 566.30 ft.), a distance of 566.79 feet to the end of said curve;

North 08 deg. 42 min. 00 sec. East, crossing a South line of Sherman Hills Country Club Addition, Golf Course Tracts to the City of Sherman, Texas as shown by plat of record in Volume 17, Pages 71 & 72, Plat Records, Grayson County, Texas and continuing for a total distance of 1199.86 feet to a point;

North 02 deg. 29 min. 14 sec. East, a distance of 166.77 feet to a point; With a curve to the left having a radius of 3154.72 feet, (chord bears North 02 deg. 14 min. 29 sec. East, 433.48 ft.), a distance of 433.82 feet to the end of said curve;

North 17 deg. 36 min. 44 sec. West, a distance of 154.38 feet to a point; North 02 deg. 50 min. 00 sec. West, a distance of 168.45 feet to a point;

THENCE North 87 deg. 10 min. 00 sec. East, crossing a North line of said Sherman Hills Country Club Addition, Golf Course Tracts, the South line of an 0.981 acre triangular tract of land described as Tract No. 2 in deed from William P. Lee, et ux to William P. Lee and Betty Lou Lee, Trustees of the William P. Lee and Betty Lou Lee Revocable Living Trust by deed dated May 8, 1997, recorded in Volume 2548, Page 19, Official Public Records, Grayson County, Texas and continuing for a total distance of 500.00 feet to an angle point on the East line of said 0.981 acre tract, the West right-of-way line of said U.S. Highway No. 75, at highway station 817+38.7;

THENCE North 79 deg. 29 min. 51 sec. East, crossing said highway, a distance of 383.43 feet to an angle point in the East right-of-way line of said U.S. Highway No. 75, the West line of a 26.318 acre tract of land described in Tract No. 1 in said deed recorded in Volume 2548, Page 19, at highway station 817+89.87;

THENCE North 87 deg. 10 min. 00 sec. East, a distance of 500.00 feet to a point 500 feet East of and perpendicular to the East right-of-way line of said U.S. Highway No. 75;

THENCE in a Southerly direction 500 feet East of and parallel with the East right-of-way line of said U.S. Highway No. 75, the following calls and distances:

South 13 deg. 38 min. 47 sec. East, a distance of 159.91 feet to a point; South 02 deg. 50 min. 00 sec. East, a distance of 149.32 feet to the beginning of a curve;

With a curve to the right having a radius of 4524.72 feet, (chord bears South 00 deg. 0 1 min. 04 sec. West, 450.15 ft.), a distance of 450.33 feet to a point in the center of Post Oak Creek and on the Southerly line of said Lee 26.318 acre tract;

THENCE in a Southeasterly direction with the center of said Post Oak Creek, the Southerly line of said 26.318 acre tract, the following calls and distances:

South 17 deg. 55 min. 00 sec. East, a distance of 113.24 feet to a point;

South 44 deg. 10 min. 00 sec. East, a distance of 232.88 feet to a point;

South 20 deg. 59 min. 00 sec. East, a distance of 279.56 feet to a point;

South 41 deg. 03 min. 00 sec. East, a distance of 105.88 feet to a point;

South 27 deg. 54 min. 00 sec. East, a distance of 173.45 feet to an angle point and a jog to the West in the West right-of-way line of old U.S. Highway No. 75, at highway station 800+00;

South 78 deg. 32 min. 13 sec. East, crossing said old highway 75 and continuing for a total distance of 127.19 feet to a point;

North 74 deg. 16 min. 00 sec. East, a distance of 52.20 feet to a point;

North 31 deg. 15 min. 00 sec. East, a distance of 275.80 feet to a point;

South 71 deg. 38 min. 00 sec. East, a distance of 103.00 feet to a point;

South 27 deg. 54 min. 00 sec. East, a distance of 458.30 feet to a point;

South 64 deg. 26 min. 00 sec. East, a distance of 22.79 feet to a point on a West line of a West line of a 221.867 acre tract of land conveyed by Stephen B. Gremmels to Pylon Farms, Inc. by deed dated October 11, 1965, recorded in Volume 1040, Page 518, Deed Records, Grayson County, Texas;

THENCE South 13 deg. 41 min. 11 sec. East, with a West line of said 221.867 acre tract, a distance of 1098.90 feet to an ell corner of said tract;

THENCE South 29 deg. 21 min. 33 sec. West, through said 221.867 acre tract, a distance of 1443.79 feet to the Northeast corner of an 0.939 acre tract of land conveyed by Windle Lee Golden, et ux to Richard J. Kalb, et ux by deed dated July 24, 1989, recorded in Volume 2049, Page 131, Real Property Records, Grayson County, Texas, the Southeast corner of a 4.256 acre tract of land conveyed by Leon H. Bloomer, et ux to Pylon Farms, Inc. by deed dated December 21, 1965, recorded in Volume 1054, Page 67, Deed Records, Grayson County, Texas, on a West line of said 221.867 acre tract;

THENCE South 14 deg. 08 min. 33 sec. East, with a West line of said 221.867 acre tract, the East line of said 0.939 acre tract, passing the Northwest corner of Constitution Village Addition, Section Two to the City of Sherman, Texas as shown by plat of record in Volume 4, Page 22, Plat Records, Grayson County, Texas and continuing for a total distance of 246.07 feet to the Southeast corner of said 0.939 acre tract;

THENCE South 14 deg. 37 min. 30 sec. East, continuing with a West line of said 221.867 acre tract, the West line of said Constitution Village Addition, Section Two, a distance of 443.34 feet to a point;

THENCE South 13 deg. 42 min. 08 sec. East, continuing with a West line of said 221.867 acre tract, the West line of said Constitution Village Addition, Section Two, passing its Southwest corner, the Northwest corner of Constitution Village Addition to the City of Sherman, Texas as shown by plat of record in Volume 3, Page 73, Plat Records, Grayson County, Texas and continuing with the West line of said Constitution Village Addition, passing its Southwest corner on the North right-of-way line of F.M. Highway No. 1417 and continuing for a total distance of 1698.56 feet to a point on the South right-of-way line of said F.M. Highway No. 1417, the North line of a 13.40 acre tract of land described in Correction Trustee's Deed from Robert W. Minshew, Trustee to Kennedy & Minshew Professional Corporation, dated September 2, 2003, recorded in Volume 3534, Page 461, Official Public Records, Grayson County, Texas;

THENCE South 75 deg. 46 min. 49 sec. West, with the South right-of-way line of said F.M.

Highway No. 1417, the North line of said 13.40 acre tract, a distance of 120.40 feet to its Northwest corner;

THENCE South 13 deg. 46 min. 49 sec. East, with the West line of said 13.40 acre tract, a distance of 776.73 feet to a point;

THENCE South 13 deg. 30 min. 32 sec. East, continuing with the West line of said 13.40 acre tract, passing its Southwest corner, the Westerly Northwest corner of a 214.134 acre tract of land conveyed by Edward C. Greene, Trustee to Rolling Meadows Associates by deed dated September 28, 1984, recorded in Volume 1716, Page 384, Deed Records, Grayson County, Texas and continuing with the Westerly West line of said 214.134 acre tract for a total distance of 849.43 feet to the Northeast corner of a 25.229 acre tract of land described in Tract 2 indeed from Sherman Development Limited Partnership No. 1 to Sam H. Berry by deed dated October 1, 1993, recorded in Volume 2298, Page 258, Real Property Records, Grayson County, Texas;

THENCE South 74 deg. 56 min. 00 sec. West, with the North line of said 25.229 acre tract, a distance of 667.02 feet to its Northwest corner, on the East right-of-way line of said U.S. Highway 75;

THENCE in a Northerly direction with the East right-of-way line of said U.S. Highway 75, the following calls and distances:

North 09 deg. 47 min. 31 sec. West, a distance of 423.53 feet to highway station 737+00"R"

North 05 deg. 50 min. 32 sec. East, a distance of 155.77 feet to highway station 738+50"R";

North 09 deg. 48 min. 00 sec. West, a distance of 200.00 feet to highway station 740+50"R";

North 14 deg. 25 min. 28 sec. West, a distance of 293.96 feet to highway station 743+43"R";

THENCE South 74 deg. 29 min. 41 sec. West, crossing said U.S. Highway 75, a distance of 319.88 feet to the Southeast corner of an 0.7688 acre tract of land conveyed by Greater Sherman, Inc. to the City of Sherman, Texas by deed dated November 8, 1978, recorded in Volume 1455, Page 265, Deed Records, Grayson County, Texas, the Northeast corner of a 24.05 acre tract of land conveyed by Sherman Economic Development Corporation to the State of Texas by deed dated January 17, 2003 recorded in Volume 3454, Page 609, Official Public Records, Grayson County, Texas.

THENCE South 80 deg. 12 min. 00 sec. West, with the South line of said 0.7688 acre tract, a North line of said 24.05 acre tract, a distance of 184.80 feet to the Southwest corner of said 0.7688 acre tract, a Northwest corner of said 24.05 acre tract, on an East line of Northgate Technology Park Addition to the City of Sherman, Texas as shown by plat of record in Volume 12, Page 43, Plat Records, Grayson County, Texas;

THENCE in a Northerly direction with the West line of said 0.76887 acre tract, an East line of said Northgate Technology Park Addition, the following calls and distances:

North, a distance of 48.43 feet to a point;

North 06 deg. 48 min. 00 sec. East, a distance of 59.50 feet to a point;

North 06 deg. 00 min. 00 sec. West, a distance of 53.00 feet to a point;

North 57 deg. 37 min. 00 sec. West, a distance of 71.12 feet to the Northwest corner of said 0.7688 acre tract, the Easterly Northeast corner of said Northgate Technology Park Addition, on the South line of 75 and 1417 Addition to the City of Sherman, Texas as shown by plat of record in Volume 12, Page 92, Plat Records, Grayson County, Texas.

THENCE South 76 deg. 23 min. 44 sec. West, with the South line of said 75 and 1417 Addition, a North line of said Northgate Technology Park Addition, a distance of 38.20 feet to the Southwest corner of Lot Two, the Southeast corner of Lot One of said 75 and 1417 Addition;

THENCE in a Northerly direction with the East line of said Lot One, the West line of said Lot Two of 75 and 1417 Addition, the following calls and distances:

North 53 deg. 38 min. 37 sec. West, a distance of 60.71 feet;

North 43 deg. 07 min. 10 sec. West, a distance of 33.15 feet;

South 77 deg. 01 min. 50 sec. West, a distance of 119.26 feet;

North 57 deg. 03 min. 29 sec. West, a distance of 63.21 feet;

South 59 deg. 49 min. 33 sec. West, a distance of 59.56 feet;

North 69 deg. 45 min. 10 sec. West, a distance of 42.46 feet;

North 06 deg. 31 min. 27 sec. East, a distance of 32.18 feet;

North 32 deg. 52 min. 33 sec. West, a distance of 54.38 feet;

North 64 deg. 39 min. 19 sec. West, a distance of 110.97 feet;

North 45 deg. 30 min. 11 sec. West, a distance of 48.34 feet to the Northeast corner of said Lot One, the Northwest corner of said Lot Two on the North line of said 75 and 1417 Addition, the South right-of-way line of F.M. Highway 1417;

THENCE North 49 deg. 46 min. 52 sec. West, crossing said F.M. Highway 1417, a distance of 194.80 feet to a point on the North right-of-way line of said F.M. Highway 1417, the South line of the above mentioned Shafer 130.48 acre tract;

THENCE in a Westerly direction with the North right-of-way line of said F.M. Highway 1417, the South line of said 130.48 acre tract, the following calls and distances:

~~South 70 deg. 42 min. 26 sec. West, a distance of 200.49 feet;~~

~~South 74 deg. 58 min. 59 sec. West, a distance of 499.93 feet;~~

~~South 73 deg. 49 min. 20 sec. West, a distance of 207.88 feet to the PLACE OF BEGINNING and containing 428.74 ACRES OF LAND more or less.~~

(c) Building Placement

(1) Minimum lot area: 1 acre

(2) Minimum lot width: 100'

(3) Building setbacks shall be as follows:

(A) 70' from U.S. Highway 75,

(B) 50' from F.M. 1417

(C) 40' from Travis Street

(D) 25' from all other public roads

(E) 15' from side and rear yards not adjacent to public roads

(F) 40' setback from any single-family zoned property

(G) Commercial accessory structures such as menu boards and drive-thru canopies may be located in the rear yard or the required side yard, but shall have a five (5) foot setback from property lines

(4) Maximum building height: 80' unless specified differently in the Blalock Industrial Park Planned Development District Regulations.

(5) Maximum impervious cover for manufacturing uses: 80%.

(d)~~(e)~~ Use chart.

(1) The use of land or buildings within the Blalock Commercial Overlay District shall be in accordance with those listed in Article 14.10 (Use Chart) of the Zoning Ordinance as determined by the base zoning district of the property, ~~unless specified below~~ *and the following uses, which are in addition to those uses listed in Article 14.10 (Use Chart):*~~.~~

Use Type	***Blalock Commercial Overlay District***
Alcoholic beverage establishments	*P*
Auditorium, arena, coliseum, theater, or amphitheater	*SUP*

Automobile accessory and supply store	*P*
Automobile laundry, carwash	*P*
Automobile repair, body work, or painting	*SUP*
Automobile service station	*P*
Bakery, confectionery, or similar (retail)	*P*
Bank, credit unions, and financial institutions	*P*
Barbershop, beauty parlor or permanent makeup	*P*
Building material sales or monument sales	*SUP*
Caterer	*P*
Christmas tree sales	*[2]*
Church or other place of worship	*SUP*
Civic club, fraternal organization, or lodge	*SUP*
Clinic, medical or dental	*P*
Commercial amusement center, indoor only	*SUP*
Contractors or construction offices, equipment sales, service, rental and repair, without outdoor storage	*P*
Department store	*P*
Drug-store or pharmacy	*P*
Farm equipment sales, service, repairs, feed store	*SUP*
Farmer's market, indoor or outdoor	*SUP*
Florist shop	*P*
Food or grocery store, retail	*P*
Food truck lot	*SUP*
Funeral home, mortuary, or crematory	*P*
Furniture and appliances sales, service, custom upholstery, not automobile related	*P*
Governmental office	*P*
Greenhouse, plant nursery, or garden center	*P*
Hardware store and small tool rental, but not including sales or lumber or industrial hardware	*P*
Health club or studio	*P*
Hotel	*SUP*
Laundry, pickup station or self-service	*P*
Municipal Uses Operated by the City	*P*
Museum, library, art gallery	*P*
Office, any type	*P*
Outdoor sales	*[1]*
Parking, surface or structured	*P*
Personal service (accounting, travel, attorney, or similar)	*P*
Pet shop (indoor only)	*P*
Printing, publishing, or reprographics, including engraving or photoengraving	*P*
Private clubs when required to obtain a permit from the Texas Alcoholic Beverage Commission	*SUP*
Radio or television broadcasting transmitter or tower,	*SUP*

microwave relay tower	
Restaurant (inside and/or outside service)	*P*
Retail store (indoor)	*P*
Schools; elementary, high, college and universities, public, private, or denominational	*SUP*
Studio for professional work or teaching (fine arts, photography, music, drama, radio, television, or recording)	*P*
Swimming pool, commercial	*P*
Tailor shop, seamstress, altering, and repairing of apparel	*P*
Veterinarian or animal hospital (indoor soundproof kennels only)	*P*
Wholesale establishment including storage	*P*
Warehousing	*P*

Legend for Use Chart
P – Use is permitted by right
SUP – Use is permitted only upon approval of a Specific Use Permit
TUP – Use is permitted only upon approval of a Temporary Use Permit
[#] – The use is permitted with certain conditions

[1] Outdoor Sales: Outdoor sales are permitted within the Blalock Commercial Overlay District subject to the following conditions:

- *Outdoor sales shall not be located in any required parking areas, drive aisles, or fire lanes.*
- *Outdoor sales may be permitted in the front yard located at the front of the main building but shall not block access to any doorways or pedestrian walkways.*
- *Outdoor sales shall not extend beyond the closest fire lane that parallels the front of the main building.*
- *Outdoor sales shall not be permitted in the side and rear yard of a lot.*

[2] Christmas Tree Sales: Christmas tree sales are permitted within the Blalock Commercial Overlay District subject to the following conditions:

- *Shall only be permitted on lots with an active Certificate of Occupancy for retail stores over 50,000 square feet in floor area.*
- *Christmas tree sales may extend into the main parking areas but shall not be located in any required parking areas, drive aisles, or fire lanes.*
- *Site plan approval is required by the Director of Development Services before a building permit can be issued for a Christmas Tree Sales use.*
- *Christmas tree sales are limited to 45 days in duration.*

(2) Notwithstanding any statement to the contrary in this Sec. 14.03.007, the following uses are prohibited within the Blalock Commercial Overlay District: Bulk chemical and petroleum storage terminals and sexually oriented businesses.

Use Type	Blalock Commercial Overlay District
Educational, Institutional, Public and Special Uses	
Helistop	P
Household care facility	P
Museum/art gallery	P
Transportation, Utility and Communication Uses	
Stealth antenna	P
Commercial telephone exchange	P
Office and Professional Uses	
Administrative, medical or professional office	P
Government office	P
Insurance office	P
Research and development center	P
Retail Uses	
Retail uses over 50,000 sq. ft.	SUP
Alcoholic beverage establishment	P
Antique shop and used furniture	P
Building material and hardware sales	P
Major building material and hardware sales	P
Minor convenience store with gas pumps	P
Convenience store without gas pumps	P
Equipment and machinery sales and rental	P

Use Type	Blalock Commercial Overlay District
Major equipment and machinery sales and rental	P
Minor feed store	P
Furniture, home furnishings and appliance store reta	P
Restaurant or cafeteria	P
Service Uses	
Artisan's workshop	P
Bank, savings and loan or credit union	P
Beauty salon/barber shop	P
Business service	P
Cabinet/upholstery shop	P
Contractor's shop and/or storage yard (inside)	P
Dry cleaning, major dry cleaning	P
Minor furniture restoration	P
Gunsmith	P
Gymnastics/dance studio	P
Health/fitness center	P
Hotel	SUP
Household appliance service and repair	P
Indoor gun range	P
Locksmith/security system company	P
Mortuary/funeral parlor	P
Print shop	P

Use Type	Blalock Commercial Overlay District
Minor restaurant or cafeteria	P
Restaurant, drive-in	P
Small engine repair shop	P
Veterinarian clinic with indoor soundproof kennels	P
Automobile and Related Uses	
Auto parts sales, inside	P
Automobile parking lot/garage	P
Automobile repair, major-no outside storage	P
Automobile repair, minor-no outside storage	P
Automobile sales/leasing, new	P
Carwash	P
Motorcycle sales/service	P
Wholesale Uses	
Bottling works	P
Mini-warehouse/public storage	P
Office/showroom	P
Office/warehouse/distribution center storage or whol	P

Legend for Use Chart

P - Use is permitted by right in district indicated

SUP - Use is permitted in district only upon approval of a specific use permit

(k)(*e*) *Building Design.* *Mandatory site and structure provisions.*

(1) *Specific materials and color palette.* To achieve unity between buildings in a commercial development of more than one building, all buildings in the subject development shall use a

~~minimum of 10% of stone or faux stone for all street facing or publicly visible facades. All other building materials and colors should coordinate with and compliment this stone.~~

(1) *General provisions. The purpose of this subsection is to maintain a consistent architecture and character of Sherman's Blalock Commercial Overlay District.*

(2) *Exterior walls. Building materials must be specified and consistent with the intent of these standards. Masonry or equivalent shall be required on the sides of all buildings in Blalock Commercial Overlay District. A complete set of elevation plans and schedule of materials used on every freestanding building shall be submitted to the planning and zoning commission.*

(A) *Exterior Walls.*

~~(2)~~*(i)* *Masonry requirements.* All buildings shall be constructed with a minimum 60% masonry, exclusive of doors and windows. Masonry shall consist of brick, stone, stucco, simulated stone, or architecturally detailed and painted concrete tilt wall. Unpainted, integral color concrete masonry units are allowed as masonry, but are limited to maximum 50% of a street facing facade.

~~(3)~~*(ii)* *Secondary materials.* Secondary materials (maximum 40%) may be EIFS, stucco, *cementitious fiberboard*, wood, metal, or other *material* approved *by the Director of Development Services* ~~material~~. Wood or vertical metal shall be limited to a maximum 15% of any building facade per material.

(iii) *The following materials are prohibited as primary cladding: Aluminum siding, galvanized steel or other bright metal, wood or plastic siding, exposed aggregate concrete, and reflective glass (greater than 27% reflectance).*

~~(4) *Earth-toned colors.* At least 80% of facade is neutral, creme, or deep, rich, non-reflective natural or earth-toned colors, and no more than 1 color is used for visible roof surfaces.~~

~~(5)~~*(iv)* *EIFS. The use of exterior insulated finishing system (EIFS) is not allowed below eight (8) feet above finished grade.*

(B) *Exterior Colors. These guideline recommendations are consistent with other example corridors with the intent of creating complementary building design.*

(i) *A minimum of 70 percent of all building elevations shall be finished with complimentary neutral, cream, or deep, rich, nonreflective earth tone colors.*

(ii) *No more than 30 percent of any building elevation may be finished with bright, pure tone primary or secondary colors.*

(C) *All buildings shall be architecturally finished with the same materials and details on the front and side building faces. The rear face of the building shall be architecturally finished if visible from a public street, unless a screening fence is provided.*

(D) *Additional architectural features (minimum 4 features). All buildings shall*

have at least four architectural features on the front and side building faces. The rear face of the building shall also have at least four architectural features if visible from a public street, unless a screening fence is provided. The architectural features shall be from the following list:

(i) Canopies, awnings, or porticos.
(ii) Recesses/projections.
(iii) Arcades (recessed porches).
(iv) Peaked roof forms.
(v) Arches.
(vi) Outdoor patios.
(vii) Display windows.
(viii) Architectural details (such as tile work and moldings) integrated into the building façade.
(ix) Articulated cornice line.
(x) Integrated planters or wing walls that incorporate landscape and sitting areas.
(xi) Offsets, reveals or projecting rib used to express architectural or structural bays.
(xii) Accent materials, such as stone, stucco, etc. (minimum 15% of exterior façade).
(xiii) Varied roof heights.

(E) Other required features include:

(i) <u>Entryway features.</u> All ground floor entrances shall be covered or inset and shall not apply to loading areas. Building entrances for the public shall be defined and articulated with architectural elements such as arcades, roofs, alcoves, columns, porticos, porches, and overhangs.

(ii) <u>Building articulation</u>. All buildings shall utilize facade offsets, material changes, color changes and/or appropriate fenestration to add architectural variation and visual interest to an elevation and to break up long uninterrupted walls or elevations.

(iii) <u>Roof treatment.</u>

a. Long uninterrupted rooflines and planes along the front and side building walls that are visible from the public right-of-way or are oriented to properties zoned or used for residential purposes shall be broken into smaller segments through the use of appropriately scaled gables and/or dormers, changes in height, changes in roof form, type, or planes which typically correspond to offsets in the building's facade, or other appropriate architectural elements.

b. The following materials are allowed for sloping roofs:

1. Asphalt shingles
2. Industry approved synthetic shingles
3. Standing seam metal
4. Tile roofs
5. Flat roofs shall require parapet screening which

adheres to the vertical articulation requirements for the main face of the structure. Parapet rooflines shall feature a well-defined cornice treatment or another similar architectural element to visually cap each front and side building elevation that are visible from the public right-of-way.

c. The following materials are prohibited as roofing materials: wood roof shingles.

(3) Fire escapes. Exterior fire escapes ladders shall not be permitted on the front side of a building. Exposed ladders shall be painted to match the color of the building or an accent color.

(4) Retaining wall. Visible portions of retaining walls shall be constructed of brick, stone, concrete, segmental block, or the built-up panels of these materials designed for exterior use. Retaining walls shall be shown on the site plan and elevations shall be provided. Exposed basket type retaining walls shall not be permitted.

~~(6) *Glass.* Windows shall have a maximum reflectivity of 20%. Pink and gold glass is not permitted.~~

~~(7) *Mechanical unit screening.* All mechanical equipment shall be screened from all public view. Screening must match building color and material. Ground-mounted mechanical units may be screened with an evergreen landscape screen.~~

~~(8) Exposed conduit, ladders, utility boxes, and drain spouts shall be painted to match the color of the building or an accent color.~~

~~(9) *Trash and recycling collection areas.*~~

~~(A) Trash and recycling collection areas shall be located to minimize visibility.~~

~~(B) Trash, recycling receptacles, and trash compactors shall be screened with an eight foot masonry wall of a consistent color and material of the primary building.~~

~~(C) Enclosures shall be oriented so that the service opening does not face any public right-of-way or residentially zoned property where possible. The opening shall incorporate a metal gate to visually screen the dumpster or compactor. Concrete-filled steel bollards are required at the rear of the enclosure and in front of the enclosure to protect the gate hinges.~~

~~(D) Enclosures located in public areas must be screened with landscaping.~~

~~(E) All metal gates must not be allowed to swing into the drive aisle or fire lane.~~

~~(10) *Loading areas.* All loading and service areas shall be screened from view from adjacent public streets and adjacent residential when possible. Screening shall be by walls compatible to the project design and landscaping.~~

(f) *Screening. ~~Prohibited uses.~~*

~~Bulk chemical and petroleum storage terminals~~

~~Sexually oriented business~~

(1) *Refuse areas. All refuse areas and dumpsters shall be screened on three sides and shall be located on private property. The enclosure shall be constructed of a material that is consistent with the main building construction. Gates are not required.*

(2) *Mechanical equipment. All ground-mounted and roof mounted equipment including, but not limited to, air-conditioning/heating units, pad-mounted transformers, telephone switch boxes and gas meters, shall be screened from all public view. Screening must match building color and material. Ground-mounted mechanical units may be screened with an evergreen landscape screen. Exposed duct and mechanical equipment shall not be permitted on any side of the building visible from the public right-of-way unless a screening fence is provided. Exposed conduit, utility boxes, and drain spouts shall be painted to match the color of the building or an accent color.*

(3) Off-street loading areas. Any off-street loading areas required under section 14.04.003(d)(5)(A) shall be required to provide a screening fence. This screening fence may be constructed out of masonry, or wood with a masonry base or masonry columns. Such fences may be located on the rear and side property lines that are adjacent to public streets.

~~(g) Non-residential building placement.~~

~~(1) 55.7' from ROW of Hwy 75 and Heritage Parkway~~

~~(2) 55.7' from ROW of other streets~~

~~(3) 55.7' from interior and rear property lines~~

(g) Signs.

(1) Freestanding signs.

(A) Only one freestanding sign *is permitted* per *platted* lot*, with the exception of corner lots. Corner lots are permitted to have two monument signs. The two permitted monument signs shall not be located on the same lot line.*

(B) Pylon or pole signs are not permitted in the Blalock Commercial Overlay District.

(C) Monument signs must include a landscaped, stone-based feature. All monument sign bases shall be constructed of the same material as the front building façade on the same site.

(D) Signs may have a maximum 65 square foot sign area and shall not exceed ten (10) feet in height. Height is measured from the grade of the fronting street.

(E) Minimum setback for signs shall be ten (10) feet from the property line. Monument signs shall not obstruct the view of turning traffic. Variances to the sight distance requirements may be approved by the City Engineer, subject to specific engineering criteria such as design speed, traffic control, and other site conditions.

(F) A sign encroachment easement is required before a freestanding sign may be constructed within any easements. Only signs with a slab or approved spread footing foundation will be permitted within a utility easement. Signs requiring piers will not be permitted within a utility easement.

(2) Wall signs.

(A) Wall signs shall not exceed twenty (20) percent of the area of any wall elevation.

(B) The maximum square foot of sign face area for each wall face is determined by the size of the building footprint:

Building Footprint (sq. ft.)	***Maximum Sign Face Area (sq. ft.)***
Less than 49,999	*300*
50,000 or greater	*800*

(3) Multi-tenant monument signs. A multi-tenant sign is one that serves as a common or collective identification for five (5) or more uses within the same development.

(A) Multi-tenant signs shall on be located along the property lines fronting U.S. Highway 75 and F.M. 1417.

(B) Multi-tenant signs shall have a separation distance of 1,000 feet from other multi-tenant signs along the same highway frontage.

(C) Minimum setback from the property line shall be 25 feet.

(D) Multi-tenant signs shall not exceed 50 feet in height.

(E) Multi-tenant signs shall not exceed 600 square feet in sign area.

(4) Development Entrance Signs.

(A) Detached ground signs are permitted at the entrance of the development that are bisected by one or more publicly dedicated streets.

(B) The maximum size shall be 32 square feet per sign with a maximum height of six (6) feet.

(C) Signs may be located at each corner of the intersection of an entrance street.

(D) Development entrance signs shall be located on private property and shall not obstruct the view of turning traffic.

(E) Approval of a sign encroachment easement is required before a development entrance sign may be constructed within any easements. Only signs with a slab foundation will be permitted within a utility easement. Signs requiring piers will not be permitted within a utility easement.

(5) Billboards. Billboards shall not be permitted within the Blalock Commercial Overlay District.

~~(h) Signs. One freestanding sign per lot. Signs may have a maximum 65 square foot face area and shall not exceed twelve feet in height. Minimum setback for signs shall be 25 feet from the highway right-of-way.~~

(h)~~(i)~~ *Parking areas. Refer to Subsection 14.04.003 for parking regulations.* ~~Parking areas and driveways shall be concrete and with curb and gutter along state highways adjacent to open drainage areas. Alternative parking materials may be used to reduce impervious cover when parking is provided that exceeds city requirements and approved by the planning and zoning commission~~. Cross access driveways are required adjacent to commercial zoned tracts. ~~The number of parking spaces required for each use is determined by similar uses in commercial and manufacturing districts.~~

(i) ~~(j)~~ *Landscaping.*

(1) Landscaping requirements for site development shall follow the regulations in Sec. 14.04.006 with the exception of the following conditions:

(i) Retail stores exceeding 50,000 square feet in floor area may substitute the required shade trees to be planted in landscape islands with ornamental landscaping within 100 feet of any store front entry.

~~(1) *Landscaping definition.* Landscaping shall be defined, for the purposes of these requirements, as plant material including, but not limited to, grass, trees, shrubs, flowers, vines and other ground cover, natural land forms, water forms, planters, walks and plaza areas.~~

~~(2) *Site definition.* Site shall be defined, for the purposes of these guidelines, as any plot, tract or parcel of land or combination of contiguous lots, tracts or parcels of land which is developed (or intended for development) according to an overall site plan. A site shall be exclusive of any land dedicated for public use through the platting process.~~

~~(3) *Compliance.* Landscaping shall conform to the following:~~

~~(A) Landscaping shall be required on all developments and shall be completed prior to the issuance of the certificate of occupancy. All detention ponds shall be landscaped.~~

~~(B) Every site adjacent to the highway right-of-way shall include a buffer strip, landscaped and irrigated, being ten (10) feet in depth adjacent to the highway right-of-way.~~

~~(C) All landscaping shall be installed so as to avoid hazards.~~

~~(D) An effort shall be made to preserve existing trees.~~

(j) Procedures and Notice.

(a) The Planning and Zoning Commission shall review the specific elements of site and building plans for development within the overlay district development area for compliance with these standards and shall make a determination of approval or disapproval of the site plan as submitted.

(b) The Planning and Zoning Commission shall review all exceptions and requests for variations to the development standards to determine compliance with the intent of the standards or to determine the necessity and appropriateness of the required exception or variation.

(c) If the Planning and Zoning Commission denies any site plan, the same application may not be filed for a period of twelve (12) months from the date of such denial.

(d) Any applicant aggrieved by a decision of the Planning and Zoning Commission may appeal the decision subject to the regulations in Section 14.06.010.

~~(l) *Design elements.* Each development must score a minimum of 6 points for buildings under 10,000 sf, 8 points for buildings 10,001–50,000 sf, and 10 points for buildings/developments 50,001 sf or above by implementing a choice/combination of the following design element (see appendix **A** of this subsection for illustrations):~~

Points	Element	Description (if necessary)
4	Four-sided architecture	Building to be equally finished with a "front door" appearance on all four sides. Required masonry percentages to be met on each elevation.
3	Building articulation	Building facades over 100' in length must have building offsets of at least 4' for a minimum of 25% of the facade. No wall plane may extend more than 100' without horizontal and vertical articulation. Building facades between 40–100' in length m have either horizontal or vertical articulation. Facade articulations/offsets shall be shown on the elevation drawings along with dimensions verifying that the elevations have met the above requirements as part site plan submittal.
2	Porches	Covered areas with columns and sloped roof attached to the main facade of the structure. Must extend at least 6 feet beyond the main facade and across at least 1 of the facade.
1	Trellises	Trellis used to enhance an entry feature or as a shaded walkway.
2	Covered walkways	An exterior walkway at least 6' in depth protected by the roof of the main structur and across at least 15% of the facade.
3	Canopies/awnings	Coverings of canvas, metal, or other material hung from the building facade to protect windows or door openings.
3	Roof overhangs	Buildings that feature a pitched roof or partially pitched roof with overhang at leas feet beyond the primary facade.
4	Natural materials	Use stone, simulated stone, stucco and/or brick, for at least 60% of facade (exclus of doors and windows).
4	Pitched roof	Pitched roof covering 100% of the total roof area with a pitch of at least 3:12 and visible flat roofline.
2	Gabled elements	If a flat roof is used, gabled parapet walls are used to break up long facades.
3	Varied roof heights	Within a pitched roof, varied roof heights or dormers to break up the line of the ro
2	Architectural details in the building facade	i.e. ornamental brickwork, limestone window/door lintels, etc.

Points	Element	Description (if necessary)
1	Decorative paving at sidewalks	Pavers or decorative concrete for min. 10% of total walkways.
1	Site amenities	Outdoor seating, patio areas, fountains, or decorative light fixtures.
1	Public sculpture/art work	Point validity to be determined by the planning and zoning commission.
2	Enhanced landscape	Provide a minimum increase of 25% in the number of trees, shrubs, and ornament plantings required by city ordinance.

* Additions to existing buildings must be of similar design, and must meet the point score required for building size of the addition.

** Applicant must submit a table with the architectural drawings enumerating the proposed points acqu for the development.

Appendix A

[Image]

Appendix B Architectural Examples

[Image]

[Image]

[Image]

SECTION 3: Penalty. Any person, firm, corporation or entity violating any provision of this Ordinance, as it exists or may be amended, shall be deemed guilty of a misdemeanor, and on conviction thereof, shall be fined in an amount not exceeding TWO THOUSAND AND NO/100 DOLLARS ($2,000.00). A violation of any provision of this Ordinance shall constitute a separate violation for each calendar day in which it occurs. The penal provisions imposed under this Ordinance shall not preclude Sherman from filing suit to enjoin the violation. Sherman retains all legal rights and remedies available to it pursuant to local, state and federal law.

SECTION 4: Severability. Should any section, subsection, sentence, clause or phrase of this Ordinance be declared unconstitutional and/or invalid by a court of competent jurisdiction, it is expressly provided that any and all remaining portions of this Ordinance shall remain in full force and effect. The City Council hereby declares that it would have passed this Ordinance, and each section, subsection, clause or phrase thereof, regardless of whether any one or more sections, subsections, sentences, clauses or phrases is declared unconstitutional and/or invalid.

SECTION 5: Repealing/Savings. The Zoning Ordinance shall remain in full force and effect, save and except as amended by this or any other Ordinance. All provisions of any ordinance in conflict with this Ordinance are hereby repealed to the extent they are in conflict, but such repeal shall not abate any pending prosecution for violation of the repealed ordinance, nor shall the repeal prevent a prosecution from being commenced for any violation if occurring prior to the repeal of the ordinance. Any remaining portions of said ordinances shall remain in full force and effect.

SECTION 4: Open Meeting. The meeting at which this Ordinance was introduced and passed was open to the public and that public notice of the time, place and purpose of said meeting was given all as required by law.

SECTION 5: Effective Date; Publication. This Ordinance shall become effective from and after its adoption and publication as required by law. The City Clerk is directed to publish the caption of this Ordinance as required by law.

DULY PASSED AND APPROVED BY THE CITY COUNCIL OF THE CITY OF SHERMAN, TEXAS.

INTRODUCED on this the 15th day of April 2024.

ADOPTED on this the 15th day of April 2024.

EFFECTIVE DATE on this the 15th day of April 2024.

CITY OF SHERMAN, TEXAS

BY: _____
DAVID PLYLER, MAYOR

ATTEST:

BY: _____
LINDA ASHBY, CITY CLERK

APPROVED AS TO FORM:
THE LAW FIRM OF ABERNATHY, ROEDER, BOYD & HULLETT, P.C.

BY: _____
RYAN D. PITTMAN, CITY ATTORNEY

Exhibit A
Legal Description and Depiction of Property Subject to the Blalock Commercial Overlay District

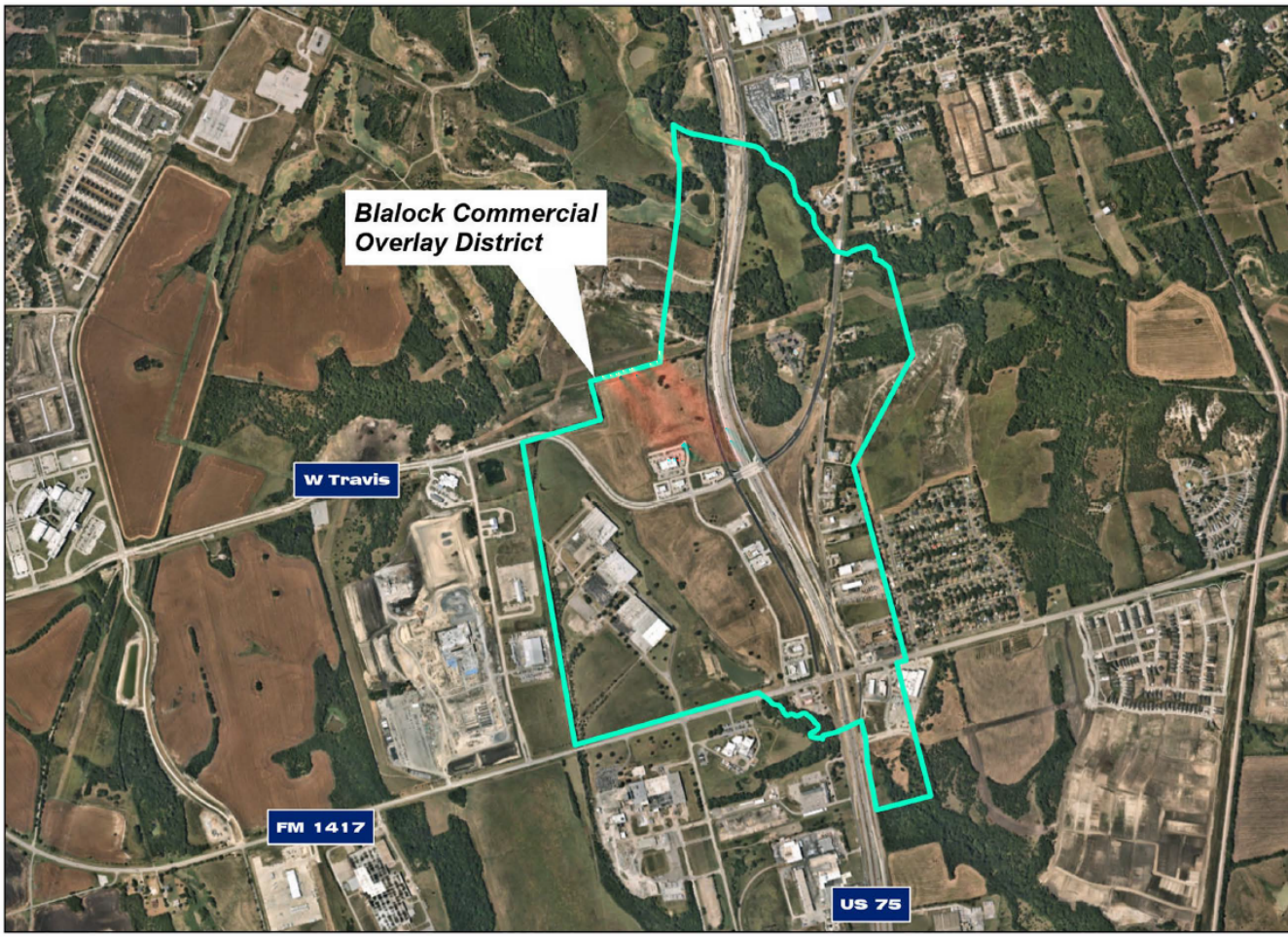

Exhibit A

Blalock Commercial Overlay District

1" = 1500'

UNDERWOOD

DRAFTING & SURVEYING, INC.

LEGAL DESCRIPTION

SITUATED in the City of Sherman, County of Grayson, State of Texas, being a part of PRESTON KITCHENS SURVEY, Abstract No. 667, the SHERROD DUNMAN SURVEY, Abstract No. 329 and the ELIZABETH JONES SURVEY, Abstract No. 625 and being more particularly described by metes and bounds as follows:

BEGINNING at the southeast corner of a 97.64 acre tract of land described in tract one in deed from Rabin Worldwide, Inc., et al to Actichem L.P., dated June 21, 2005, recorded in Volume 3880, Page 138, Official Public Records, Grayson County, Texas, the Southwest corner of a 130.48 acre tract of land described in deed from Rabin Worldwide, Inc., et al to Shafer Plaza XLII, Ltd., dated March 28, 2005, recorded in Volume 3842, Page 40, Official Public Records, Grayson County, Texas, on the North right-of-way line of F.M. Highway No. 1417;

Thence South 73°59'05" West, a distance of 1345.15 feet to a point;
Thence North 09°53'01" West, a distance of 3645.56 feet to a point;
Thence North 73°51'13" East, a distance of 968.05 feet to a point;
Thence North 15°00'59" West, a distance of 471.60 feet to a point;
Thence North 74°34'24" East, a distance of 861.65 feet to a point;
Thence North 02°44'19" East, a distance of 250.38 feet to a point;
Thence North 06°38'25" East, a distance of 318.86 feet to a point;
Thence North 07°39'01" East, a distance of 291.03 feet to a point;
Thence North 07°39'01" East, a distance of 556.27 feet to a point;
Thence North 07°39'01" East, a distance of 356.85 feet to a point;
Thence North 01°26'15" East, a distance of 166.75 feet to a point;
Thence North 03°39'18" East, a distance of 162.53 feet to a point;
Thence North 00°41'28" East, a distance of 163.77 feet to a point;
Thence North 01°46'20" West, a distance of 107.42 feet to a point;
Thence North 18°39'43" West, a distance of 154.36 feet to a point;
Thence North 03°52'59" West, a distance of 310.02 feet to a point;
Thence South 62°23'06" East, a distance of 195.18 feet to a point;
Thence South 69°53'15" East, a distance of 38.67 feet to a point;
Thence South 78°39'12" East, a distance of 788.29 feet to a point;
Thence South 59°20'56" East, a distance of 81.13 feet to a point;
Thence South 38°59'28" East, a distance of 69.84 feet to a point;
Thence South 24°26'38" East, a distance of 93.70 feet to a point;
Thence South 57°15'54" East, a distance of 43.02 feet to a point;
Thence South 65°46'20" East, a distance of 113.38 feet to a point;
Thence South 54°51'57" East, a distance of 85.34 feet to a point;
Thence South 43°01'30" East, a distance of 53.04 feet to a point;
Thence South 33°06'42" East, a distance of 70.98 feet to a point;
Thence South 14°28'12" East, a distance of 82.76 feet to a point;
Thence South 08°25'35" East, a distance of 96.61 feet to a point;
Thence South 32°24'00" East, a distance of 100.19 feet to a point;
Thence South 58°10'21" East, a distance of 55.53 feet to a point;
Thence South 79°59'30" East, a distance of 28.08 feet to a point;

Thence South 35°16'21" East, a distance of 81.70 feet to a point;
Thence South 36°52'11" East, a distance of 65.07 feet to a point;
Thence South 03°30'12" East, a distance of 79.86 feet to a point;
Thence South 17°06'10" East, a distance of 66.38 feet to a point;
Thence South 34°26'20" East, a distance of 69.04 feet to a point;
Thence South 38°20'01" East, a distance of 89.18 feet to a point;
Thence South 52°21'08" East, a distance of 71.91 feet to a point;
Thence South 34°52'31" East, a distance of 65.44 feet to a point;
Thence South 28°45'09" East, a distance of 64.20 feet to a point;
Thence South 75°25'55" East, a distance of 162.42 feet to a point;
Thence North 55°37'10" East, a distance of 61.34 feet to a point;
Thence North 69°24'19" East, a distance of 78.07 feet to a point;
Thence North 73°57'50" East, a distance of 77.91 feet to a point;
Thence North 79°34'46" East, a distance of 39.66 feet to a point;
Thence South 73°58'04" East, a distance of 40.59 feet to a point;
Thence South 49°49'50" East, a distance of 45.18 feet to a point;
Thence South 17°12'35" East, a distance of 53.04 feet to a point;
Thence South 04°10'13" East, a distance of 43.16 feet to a point;
Thence South 33°58'35" East, a distance of 24.87 feet to a point;
Thence South 68°16'22" East, a distance of 64.19 feet to a point;
Thence South 51°25'22" East, a distance of 120.05 feet to a point;
Thence South 15°02'55" East, a distance of 1068.33 feet to a point;
Thence South 28°05'35" West, a distance of 1492.42 feet to a point;
Thence South 15°10'19" East, a distance of 2392.44 feet to a point;
Thence South 74°49'38" West, a distance of 117.13 feet to a point;
Thence South 14°12'07" East, a distance of 1003.19 feet to a point;
Thence South 14°46'12" East, a distance of 628.37 feet to a point;
Thence South 75°28'31" West, a distance of 664.36 feet to a point;
Thence North 11°08'34" West, a distance of 554.09 feet to a point;
Thence North 04°35'34" West, a distance of 298.31 feet to a point;
Thence North 13°31'42" West, a distance of 225.36 feet to a point;
Thence South 64°47'27" West, a distance of 311.36 feet to a point;
Thence South 75°42'35" West, a distance of 180.20 feet to a point;
Thence South 01°07'24" West, a distance of 42.02 feet to a point;
Thence North 54°53'37" West, a distance of 21.42 feet to a point;
Thence North 90°00'00" West, a distance of 40.31 feet to a point;
Thence North 88°34'06" West, a distance of 22.51 feet to a point;
Thence North 76°25'46" West, a distance of 39.15 feet to a point;
Thence North 70°10'38" West, a distance of 17.14 feet to a point;
Thence North 48°08'41" West, a distance of 12.08 feet to a point;
Thence North 27°45'32" West, a distance of 12.08 feet to a point;
Thence North 09°51'53" West, a distance of 8.75 feet to a point;
Thence North 14°02'07" East, a distance of 9.28 feet to a point;
Thence North 39°48'25" East, a distance of 10.25 feet to a point;
Thence North 60°54'48" East, a distance of 32.40 feet to a point;
Thence North 83°59'21" East, a distance of 14.33 feet to a point;
Thence North 74°25'04" East, a distance of 9.25 feet to a point;
Thence North 52°25'51" East, a distance of 8.93 feet to a point;
Thence North 42°16'25" East, a distance of 40.48 feet to a point;
Thence North 24°13'42" East, a distance of 11.94 feet to a point;

Thence North 06°06'54" West, a distance of 15.33 feet to a point;
Thence North 27°53'51" West, a distance of 20.95 feet to a point;
Thence North 49°23'55" West, a distance of 40.16 feet to a point;
Thence North 30°15'27" West, a distance of 15.13 feet to a point;
Thence North 43°18'19" West, a distance of 65.10 feet to a point;
Thence North 53°17'29" West, a distance of 77.44 feet to a point;
Thence North 82°52'28" West, a distance of 17.56 feet to a point;
Thence South 74°44'39" West, a distance of 18.63 feet to a point;
Thence South 63°44'00" West, a distance of 46.76 feet to a point;
Thence South 75°19'25" West, a distance of 23.64 feet to a point;
Thence North 80°16'21" West, a distance of 19.34 feet to a point;
Thence North 55°55'22" West, a distance of 22.35 feet to a point;
Thence North 72°38'46" West, a distance of 18.26 feet to a point;
Thence North 87°52'43" West, a distance of 14.71 feet to a point;
Thence South 63°26'03" West, a distance of 18.27 feet to a point;
Thence South 70°54'25" West, a distance of 14.98 feet to a point;
Thence South 85°06'05" West, a distance of 19.13 feet to a point;
Thence North 67°04'08" West, a distance of 15.37 feet to a point;
Thence North 43°15'51" West, a distance of 12.71 feet to a point;
Thence North 30°04'06" West, a distance of 23.91 feet to a point;
Thence North 23°46'56" West, a distance of 35.11 feet to a point;
Thence North 41°35'50" West, a distance of 71.36 feet to a point;
Thence North 86°28'41" West, a distance of 35.46 feet to a point;
Thence North 68°42'48" West, a distance of 45.00 feet to a point;
Thence North 41°38'03" West, a distance of 26.23 feet to a point;
Thence North 39°03'37" West, a distance of 25.41 feet to a point;
Thence North 55°12'51" West, a distance of 160.09 feet to a point;
Thence South 74°04'44" West, a distance of 918.39 feet to the Point-of-Beginning and containing 519.638 acres (22635432 square feet) of land, more or less.

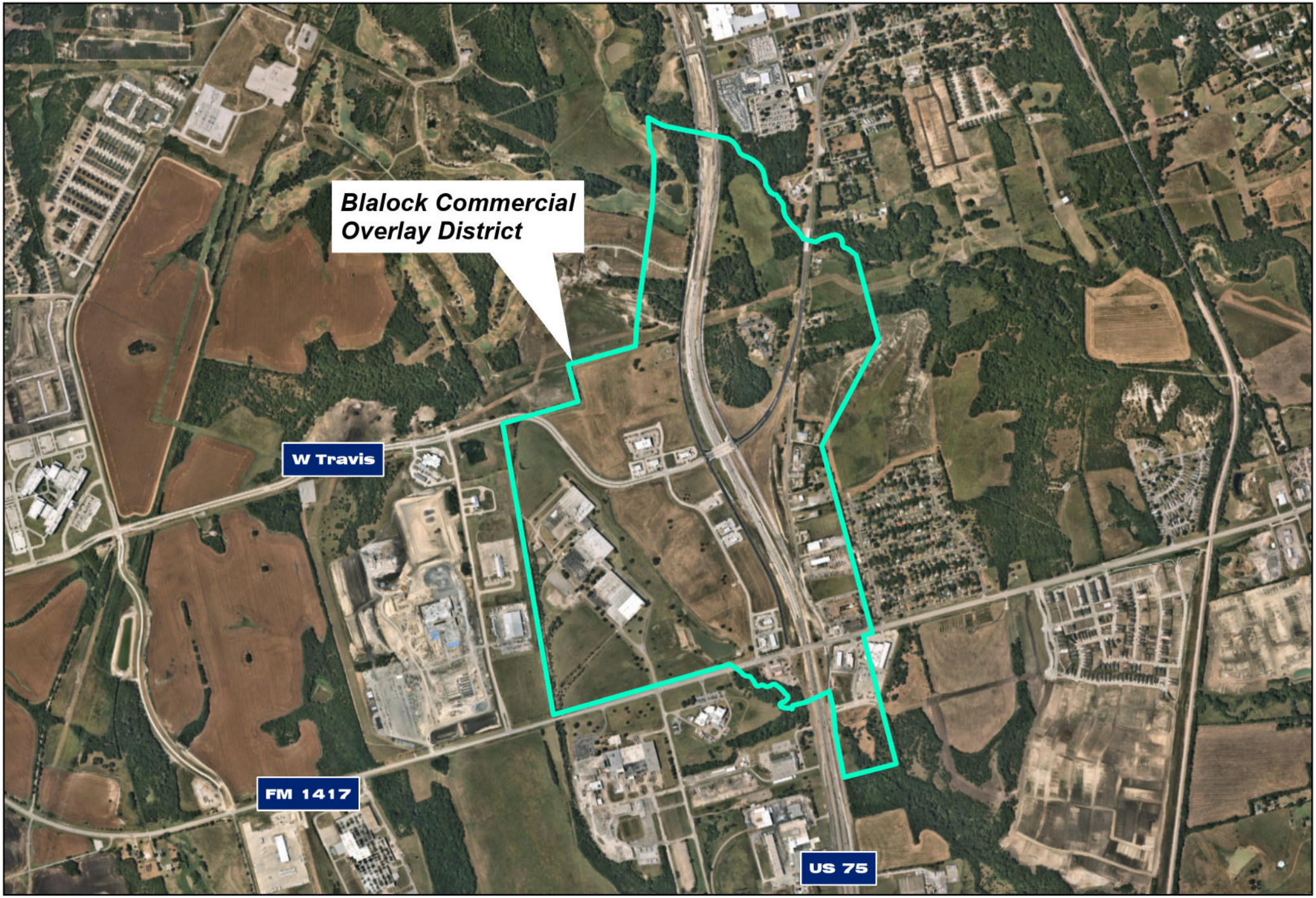

Sherman Development Engineering Group

Exhibit A

Blalock Commercial Overlay District

1" = 1500'

NORTH

EXHIBIT A

UNDERWOOD

DRAFTING & SURVEYING, INC.

LEGAL DESCRIPTION

SITUATED in the City of Sherman, County of Grayson, State of Texas, being a part of PRESTON KITCHENS SURVEY, Abstract No. 667, the SHERROD DUNMAN SURVEY, Abstract No. 329 and the ELIZABETH JONES SURVEY, Abstract No. 625 and being more particularly described by metes and bounds as follows:

BEGINNING at the southeast corner of a 97.64 acre tract of land described in tract one in deed from Rabin Worldwide, Inc., et al to Actichem L.P., dated June 21, 2005, recorded in Volume 3880, Page 138, Official Public Records, Grayson County, Texas, the Southwest corner of a 130.48 acre tract of land described in deed from Rabin Worldwide, Inc., et al to Shafer Plaza XLII, Ltd., dated March 28, 2005, recorded in Volume 3842, Page 40, Official Public Records, Grayson County, Texas, on the North right-of-way line of F.M. Highway No. 1417;

Thence South 73°59'05" West, a distance of 1345.15 feet to a point;
Thence North 09°53'01" West, a distance of 3645.56 feet to a point;
Thence North 73°51'13" East, a distance of 968.05 feet to a point;
Thence North 15°00'59" West, a distance of 471.60 feet to a point;
Thence North 74°34'24" East, a distance of 861.65 feet to a point;
Thence North 02°44'19" East, a distance of 250.38 feet to a point;
Thence North 06°38'25" East, a distance of 318.86 feet to a point;
Thence North 07°39'01" East, a distance of 291.03 feet to a point;
Thence North 07°39'01" East, a distance of 556.27 feet to a point;
Thence North 07°39'01" East, a distance of 356.85 feet to a point;
Thence North 01°26'15" East, a distance of 166.75 feet to a point;
Thence North 03°39'18" East, a distance of 162.53 feet to a point;
Thence North 00°41'28" East, a distance of 163.77 feet to a point;
Thence North 01°46'20" West, a distance of 107.42 feet to a point;
Thence North 18°39'43" West, a distance of 154.36 feet to a point;
Thence North 03°52'59" West, a distance of 310.02 feet to a point;
Thence South 62°23'06" East, a distance of 195.18 feet to a point;
Thence South 69°53'15" East, a distance of 38.67 feet to a point;
Thence South 78°39'12" East, a distance of 788.29 feet to a point;
Thence South 59°20'56" East, a distance of 81.13 feet to a point;
Thence South 38°59'28" East, a distance of 69.84 feet to a point;
Thence South 24°26'38" East, a distance of 93.70 feet to a point;
Thence South 57°15'54" East, a distance of 43.02 feet to a point;
Thence South 65°46'20" East, a distance of 113.38 feet to a point;
Thence South 54°51'57" East, a distance of 85.34 feet to a point;
Thence South 43°01'30" East, a distance of 53.04 feet to a point;
Thence South 33°06'42" East, a distance of 70.98 feet to a point;
Thence South 14°28'12" East, a distance of 82.76 feet to a point;
Thence South 08°25'35" East, a distance of 96.61 feet to a point;
Thence South 32°24'00" East, a distance of 100.19 feet to a point;
Thence South 58°10'21" East, a distance of 55.53 feet to a point;
Thence South 79°59'30" East, a distance of 28.08 feet to a point;

Thence South 35°16'21" East, a distance of 81.70 feet to a point;
Thence South 36°52'11" East, a distance of 65.07 feet to a point;
Thence South 03°30'12" East, a distance of 79.86 feet to a point;
Thence South 17°06'10" East, a distance of 66.38 feet to a point;
Thence South 34°26'20" East, a distance of 69.04 feet to a point;
Thence South 38°20'01" East, a distance of 89.18 feet to a point;
Thence South 52°21'08" East, a distance of 71.91 feet to a point;
Thence South 34°52'31" East, a distance of 65.44 feet to a point;
Thence South 28°45'09" East, a distance of 64.20 feet to a point;
Thence South 75°25'55" East, a distance of 162.42 feet to a point;
Thence North 55°37'10" East, a distance of 61.34 feet to a point;
Thence North 69°24'19" East, a distance of 78.07 feet to a point;
Thence North 73°57'50" East, a distance of 77.91 feet to a point;
Thence North 79°34'46" East, a distance of 39.66 feet to a point;
Thence South 73°58'04" East, a distance of 40.59 feet to a point;
Thence South 49°49'50" East, a distance of 45.18 feet to a point;
Thence South 17°12'35" East, a distance of 53.04 feet to a point;
Thence South 04°10'13" East, a distance of 43.16 feet to a point;
Thence South 33°58'35" East, a distance of 24.87 feet to a point;
Thence South 68°16'22" East, a distance of 64.19 feet to a point;
Thence South 51°25'22" East, a distance of 120.05 feet to a point;
Thence South 15°02'55" East, a distance of 1068.33 feet to a point;
Thence South 28°05'35" West, a distance of 1492.42 feet to a point;
Thence South 15°10'19" East, a distance of 2392.44 feet to a point;
Thence South 74°49'38" West, a distance of 117.13 feet to a point;
Thence South 14°12'07" East, a distance of 1003.19 feet to a point;
Thence South 14°46'12" East, a distance of 628.37 feet to a point;
Thence South 75°28'31" West, a distance of 664.36 feet to a point;
Thence North 11°08'34" West, a distance of 554.09 feet to a point;
Thence North 04°35'34" West, a distance of 298.31 feet to a point;
Thence North 13°31'42" West, a distance of 225.36 feet to a point;
Thence South 64°47'27" West, a distance of 311.36 feet to a point;
Thence South 75°42'35" West, a distance of 180.20 feet to a point;
Thence South 01°07'24" West, a distance of 42.02 feet to a point;
Thence North 54°53'37" West, a distance of 21.42 feet to a point;
Thence North 90°00'00" West, a distance of 40.31 feet to a point;
Thence North 88°34'06" West, a distance of 22.51 feet to a point;
Thence North 76°25'46" West, a distance of 39.15 feet to a point;
Thence North 70°10'38" West, a distance of 17.14 feet to a point;
Thence North 48°08'41" West, a distance of 12.08 feet to a point;
Thence North 27°45'32" West, a distance of 12.08 feet to a point;
Thence North 09°51'53" West, a distance of 8.75 feet to a point;
Thence North 14°02'07" East, a distance of 9.28 feet to a point;
Thence North 39°48'25" East, a distance of 10.25 feet to a point;
Thence North 60°54'48" East, a distance of 32.40 feet to a point;
Thence North 83°59'21" East, a distance of 14.33 feet to a point;
Thence North 74°25'04" East, a distance of 9.25 feet to a point;
Thence North 52°25'51" East, a distance of 8.93 feet to a point;
Thence North 42°16'25" East, a distance of 40.48 feet to a point;
Thence North 24°13'42" East, a distance of 11.94 feet to a point;

Thence North 06°06'54" West, a distance of 15.33 feet to a point;
Thence North 27°53'51" West, a distance of 20.95 feet to a point;
Thence North 49°23'55" West, a distance of 40.16 feet to a point;
Thence North 30°15'27" West, a distance of 15.13 feet to a point;
Thence North 43°18'19" West, a distance of 65.10 feet to a point;
Thence North 53°17'29" West, a distance of 77.44 feet to a point;
Thence North 82°52'28" West, a distance of 17.56 feet to a point;
Thence South 74°44'39" West, a distance of 18.63 feet to a point;
Thence South 63°44'00" West, a distance of 46.76 feet to a point;
Thence South 75°19'25" West, a distance of 23.64 feet to a point;
Thence North 80°16'21" West, a distance of 19.34 feet to a point;
Thence North 55°55'22" West, a distance of 22.35 feet to a point;
Thence North 72°38'46" West, a distance of 18.26 feet to a point;
Thence North 87°52'43" West, a distance of 14.71 feet to a point;
Thence South 63°26'03" West, a distance of 18.27 feet to a point;
Thence South 70°54'25" West, a distance of 14.98 feet to a point;
Thence South 85°06'05" West, a distance of 19.13 feet to a point;
Thence North 67°04'08" West, a distance of 15.37 feet to a point;
Thence North 43°15'51" West, a distance of 12.71 feet to a point;
Thence North 30°04'06" West, a distance of 23.91 feet to a point;
Thence North 23°46'56" West, a distance of 35.11 feet to a point;
Thence North 41°35'50" West, a distance of 71.36 feet to a point;
Thence North 86°28'41" West, a distance of 35.46 feet to a point;
Thence North 68°42'48" West, a distance of 45.00 feet to a point;
Thence North 41°38'03" West, a distance of 26.23 feet to a point;
Thence North 39°03'37" West, a distance of 25.41 feet to a point;
Thence North 55°12'51" West, a distance of 160.09 feet to a point;
Thence South 74°04'44" West, a distance of 918.39 feet to the Point-of-Beginning and containing 519.638 acres (22635432 square feet) of land, more or less.

DocuSign Envelope ID: BA0F0DA3-3C7E-4D88-9401-58977164E93A

Sherman 301-A, LLC
12400 Coit Road, Suite 1000
Dallas, TX 75251

Mr. Rob Rae
Director of Development Services
220 W Mulberry Steet
Sherman, TX 75090
robr@cityofsherman.com

Dear Mr. Rae,

I hope this letter finds you well. My name is Matt Coit, and I am the manager of Sherman 301-A, LLC, the property owner of the approximately 97-acre tract of land and improvements located at 301 FM1417, Sherman, TX 75092. I am writing to express my support for the extension of the Blalock Commercial Overlay District to the subject property.

Sincerely,

DocuSigned by:
EE6E601915EB4AD...
Matt Coit

SHERMAN CITY COUNCIL
Agenda Communication Form

City Council Regular Meeting Agenda Item No. G.1.

Meeting Date: 4/15/2024

Prepared By:

Approved By:

Caption:
CLOSE PUBLIC HEARING
Consider Adoption of Ordinance Numbers 6710, 6711, 6712 & 6713.

Issue:

F. 1. INTRODUCTION AND PUBLIC HEARING OF ORDINANCE NO. 6710
Amending Sherman's Zoning Ordinance/Code Of Ordinances Chapter 14, To Rezone A Tract Of Land Consisting Of 0.103 acres being a part of the J.B. McAnair Survey, Abstract No. 763, City Of Sherman, Grayson County, Texas, Located At 310 East Brockett Street, Heretofore Zoned R-6 (Single Family Residential) District; Rezoning And Placing The Tract In The R-4 (Single Family Residential) District Zoning Classification, Zach Adlof (Owner), Rodney Martinez, Centro Resources, LLC (Representative) and Burns Surveying (Surveyor) Providing For A Penalty Not To Exceed $2,000.00; Providing A Repealing/Savings Clause, Severability Clause And An Effective Date

F. 2. INTRODUCTION AND PUBLIC HEARING OF ORDINANCE NO. 6711
Amending Sherman's Zoning Ordinance/Code Of Ordinances Chapter 14, To Rezone A Tract Of Land, Tract 1, Consisting Of 42.205 Acres In The S.C. Inman Survey, Abstract 621 And The T. Shannon Survey, Abstract No. 1136, City Of Sherman, Grayson County, Texas, Located In The 2700 Block Blue Flame Road And 5100 Block Fallon Drive, Heretofore Zoned R-6 (Single Family Residential) District; Rezoning And Placing The Tract In The R-TH (Townhome Residential) District, Pilot Point Land Partners, LLC (Owner), Nathan Parrott, PapeDawson Engineers (Representative) and Pape-Dawson Engineers (Engineer/Surveyor) Providing For A Penalty Not To Exceed $2,000.00; Providing A Repealing/Savings Clause, Severability Clause And An Effective Date

F. 3. INTRODUCTION AND PUBLIC HEARING OF ORDINANCE NO. 6712
An Ordinance Of The City Council Of The City Of Sherman, Texas, Amending The Code Of Ordinances Of The City Of Sherman, Texas, Chapter 14 (Zoning Ordinance), Section 14.02.010 (R-TH Townhome Residential District), Section 14.02.012 (MF-30 Multifamily Residential District), Article 14.07 (Signs), Section 14.08.001 (Definitions), Article 14.10 (Use Chart); Modifying Certain Existing Regulations And Prescribing New Regulations Relating To Townhome And Multifamily Building Separation, Multifamily and Single-Family Sign Regulations, And Changes to the Use Chart Regarding Billboards and Travel Trailer Parks; Providing A Penalty Clause With A Maximum Fine Of $2,000, Savings/Repealing Clause, Severability Clause And An Effective Date; Providing For The Publication Of The Caption Hereof

F. 4. INTRODUCTION AND PUBLIC HEARING OF ORDINANCE NO. 6713
Amending The Code Of Ordinances Of The City Of Sherman, Texas, Chapter 14 (Zoning Ordinance), Section 14.03.007 (Blalock Commercial Overlay District); Modifying Certain Existing Regulations And Prescribing New Regulations Relating To The Blalock Commercial Overlay District And Expanding The Blalock Commercial Overlay District Boundaries; Providing A Penalty Clause With A Maximum Fine Of

$2,000, Savings/Repealing Clause, Severability Clause And An Effective Date; Providing For The Publication Of The Caption Hereof;

Background:

Origination:

Financial Consideration:

Staff Recommendation:

Alternatives:

Attachments:
None

SHERMAN CITY COUNCIL
Agenda Communication Form

City Council Regular Meeting Agenda Item No. H.1.

Meeting Date: 4/15/2024

Prepared By: Mary Lawrence, Chief Financial Officer

Approved By: Robby Hefton, City Manager

Caption:

RESOLUTION NO 7281

Authorizing Execution of an Economic Development Program and Agreement with Broadstone HHH Texas LLC for the Grant of Incentives Pursuant to Chapter 380 of the Texas Local Government Code for Real Property Improvements.

Issue:

To consider an Economic Development Program and Agreement with Broadstone HHH Texas LLC

Background:

Broadstone HHH Texas LLC ("Broadstone") is the owner of the manufacturing facility for Sunny Delight Beverages. On October 3, 2022, the City Council approved a tax abatement agreement with Broadstone that required Broadstone to make $14 million in improvements to the current facility, including the installation of two new product lines that will make Juicy Juice tetra products. The improvements were completed for a total of about $8.1 million. Because the terms of the agreement were not met by Broadstone, both parties desire to terminate the tax abatement agreement and execute an economic development program and grant under Chapter 380 of the Texas Local Government Code. The grant amount is based on a percent of Broadstone's ad valorem taxes. The savings realized by the taxpayer has been reduced proportionately by the amount of the actual improvements to the improvements under the tax abatement agreement.

Origination:

Finance Department

Financial Consideration:

Over the eight-year term of the agreement, the benefit to Broadstone is about $50,000.

Staff Recommendation:

Staff recommends approval of the Chapter 380 Agreement.

Alternatives:

The Council could suggest changes to the agreement or decline to approve it.

Attachments:

1. Resolution No. 7281
2. Broadstone_HHH_Texas_Harvest_Hill_Chapter_380_Real_Property_ID_372587__Bob_Farnan-signed (ID 373988)

RESOLUTION NO. 7281

A RESOLUTION OF THE CITY COUNCIL OF THE CITY OF SHERMAN, TEXAS, AUTHORIZING EXECUTION OF AN ECONOMIC DEVELOPMENT PROGRAM AGREEMENT WITH BROADSTONE HHH TEXAS LLC FOR THE GRANT OF INCENTIVES PURSUANT TO CHAPTER 380 OF THE TEXAS LOCAL GOVERNMENT CODE FOR PROPERTY IMPROVEMENTS; FINDING AND DETERMINING THAT THE MEETING AT WHICH THIS RESOLUTION IS PASSED WAS NOTICED AND IS OPEN TO THE PUBLIC AS REQUIRED BY LAW.

BE IT RESOLVED BY THE CITY COUNCIL OF THE CITY OF SHERMAN, TEXAS:

SECTION 1. That the Mayor be and is hereby authorized and directed, subject to receipt of a fully executed agreement from Broadstone HHH Texas LLC. and subject to all contract documents being properly completed and approved as to form and content by the City Attorney, to execute an Economic Development Program Agreement with Broadstone HHH Texas LLC, for the grant of incentives pursuant to Chapter 380 of the Texas Local Government Code for the construction of Property Improvements within the City of Sherman, in the same or substantially same form as the contract documents attached hereto and made a part hereof for all purposes.

SECTION 2. That it is hereby officially found and determined that the meeting at which this resolution is passed is open to the public and that public notice of the time, place, and purpose of said meeting was given as required by law.

DULY PASSED AND APPROVED BY THE CITY COUNCIL AND THE CITY OF SHERMAN TEXAS on this the 15th day of April 2024.

CITY OF SHERMAN, TEXAS

ATTEST:

BY: _____ **BY:** _____
LINDA ASHBY, CITY CLERK **DAVID PLYLER, MAYOR**

APPROVED AS TO FORM
AND CONTENT:
THE LAW FIRM OF ABERNATHY,
ROEDER, BOYD & HULLETT, P.C.

BY: _____
RYAN D. PITTMAN, CITY ATTORNEY

CHAPTER 380 ECONOMIC DEVELOPMENT PROGRAM AND AGREEMENT

This CHAPTER 380 ECONOMIC DEVELOPMENT PROGRAM AND AGREEMENT (the "**Agreement**") is entered into by and between the CITY OF SHERMAN, TEXAS, a home rule municipality (the "**City**"), and BROADSTONE HHH TEXAS LLC, a New York limited liability company ("**Company**").

WHEREAS, Company owns approximately 64.4 acres of land more particularly described in Exhibit A attached hereto (the "**Land**"); and

WHEREAS, the parties entered into that certain Ad Valorem Tax Abatement Agreement dated January 30, 2023 (the "**Original Agreement**"), concerning expansion of production at the Company's manufacturing facility on the Land (the "**Premises**"), including the equipment of two additional production lines with new machinery, equipment, furniture, fixtures and inventory for the production of Juicy Juice tetra box products, to be placed in service on or after the effective date of the Original Agreement, and other ancillary facilities more fully described in the submittals filed by Company with the City, from time to time, in order to obtain a building permit(s) (collectively, the "**Property Improvements**"). The Property Improvements and use of the Land were and are expected to significantly enhance the economic base of the City; and.

WHEREAS, the parties agree that Company did not satisfy the minimum capital investment requirements and conditions under the Original Agreement and therefore Company is and was not entitled to and did not receive the Tax Abatement (as defined under the Original Agreement) pursuant to the Original Agreement; and

WHEREAS accordingly, the parties hereby agree to terminate and fully release each other from all obligations under the Original Agreement as of the Effective Date of this Agreement. On the Effective Date, all rights and obligations of the parties under the Original Agreement shall cease. The City and Company hereby release and discharge each other and its respective affiliates, officers, directors, employees, agents, successors and assigns from any and all claims, demands, action, causes of action, suits, damages, liabilities, and expenses of any nature whatsoever, whether known or unknown, arising out of or in connection with the Original Agreement or its termination.

WHEREAS, Company represents that the Property Improvements constitute a capital investment of $8.1 million by Company and that the Property Improvements are expected to retain significant existing employment and bring new employment to the City, with expected new employment totaling 74 Employment Positions, as hereinafter defined, in each such phase (collectively, the "**Project**"); and

WHEREAS, Company's selection of the City as the location for the Property Improvements is the result of collaboration among Company, the City and other units of local government and economic development entities; and

WHEREAS, the City Council of the City ("**City Council**") finds that the Property Improvements would be of benefit to the Land and the City after expiration of this Agreement; and

WHEREAS, Company has requested that the City authorize and provide certain economic development grants in connection with its development of the Property Improvements as provided herein; and

WHEREAS, pursuant to Chapter 380 of the Texas Local Government Code and for the public purpose of promoting economic development and diversity, increasing employment, reducing unemployment and underemployment, expanding commerce, and stimulating business and commercial activity in the State of Texas, Grayson County, and the City, the City desires to offer certain economic development grants to Company as more particularly described in this Agreement.

NOW, THEREFORE, for and in consideration of the promises, covenants, and agreements set forth herein, the receipt and sufficiency of which are hereby acknowledged, the City and Company agree as follows:

1. **Definitions**.

a. "Affiliate" shall mean any person, directly or indirectly controlling, controlled by, or under common control with Company. As used in this definition, the term "control" means the possession, directly or indirectly, of the power to direct or cause the direction of the management and policies of a person, whether through ownership of voting securities, by contract or otherwise.

b. "Capital Investment" means the total capitalized cost invested by Company for the Property Improvements that are the subject of the Grants under this Agreement.

c. "Certificate of Occupancy" means the final certificate of occupancy issued by the City with respect to any Property Improvements allowing for the entrance and operation within such improvements.

d. "Completion of Construction" means a final Certificate of Occupancy has been issued by the City with respect to the Property Improvements.

e. "Delinquent Ad Valorem Taxes" means any validly imposed Texas local or state ad valorem taxes that Company does not remit by the lawful due date, but does not include any such taxes that are assessed against Company as the result of a tax audit or other similar notice of assessment by any taxing authority unless Company fails to timely appeal such audit or notice of assessment. If Company subsequently loses the appeal of the ad valorem tax audit or other notice of assessment, or fails to timely appeal the audit or notice of assessment, the taxes assessed pursuant to the audit will be considered "delinquent" the day after the date specified by the final order on appeal as the due date for payment or the day after the due date for a timely appeal if no appeal is taken or filed by Company.

f. "Employment Positions" means non-temporary full time employment positions of Company or a Company Affiliate at the Premises, including employees of contractors assigned to the Premises as shown on Company's internal management

systems. Two (2) or more part-time employees, totaling thirty (30) hours or more per week may be substituted for one (1) full-time employee.

g. "Event of Bankruptcy or Insolvency" means the dissolution or termination of Company's existence as a going business, insolvency, appointment of receiver for any significant part of Company's property and such appointment is not terminated within ninety (90) days after such appointment is initially made, any general assignment for the benefit of creditors, or the commencement of any proceeding under any bankruptcy or insolvency laws by or against Company and such proceeding is not dismissed within ninety (90) days after the filing thereof.

h. "Force Majeure" means any delay caused by reason of war, civil commotion, acts of God, strike, inclement weather, shortages or unavailability of labor, supplies or materials (including but not limited to circumstances related to declared national emergencies such as but not limited to COVID-19) or other circumstances which are beyond the reasonable control and are without the fault or negligence of the obligated party, regardless of whether any such circumstance is similar to any of those enumerated or not. The obligated party shall be excused from doing or performing the same during such period of delay, so that the time period applicable to such requirement and any applicable completion deadline shall be extended for a period of time equal to the period the obligated party was delayed, provided that the party claiming delay as a result of any of the foregoing Force Majeure events shall deliver written notice of the commencement of any such delay resulting from such Force Majeure event not later than seven (7) days after the claiming party becomes aware of the same, and if the claiming party fails to so notify the other party of the occurrence of a Force Majeure event causing such delay, the claiming party shall not be entitled to avail itself of the provisions for the extension of performance contained in this subsection. Force Majeure will not mean nor include delays caused by Company's lack of, or inability to obtain, funding.

i. "Land" shall mean the real property described in Exhibit A, attached hereto.

j. "Person" shall mean an individual or a corporation, partnership, trust, estate, unincorporated organization, association, or other entity.

k. "Property Improvements" collectively means all the improvements that Company developed and constructed on the Premises on or after January 30, 2023 (the effective date of the Original Agreement) and before the Effective Date of this Agreement, which include, without limitation, the improvements described in Exhibit B. The term does not include any tangible personal property.

l. "Taxable Value" means the appraised value as certified by the Grayson County Appraisal District as of January l of a given year.

2. **Subject of this Agreement**. Company will operate the Project, as further described in the submittals filed with the City.

3. **Economic Development Grants**. Subject to the terms and conditions of this Agreement, and specifically the satisfaction of the conditions for qualifying in Section 4 below, the City will provide economic development grants (each a "**Grant**") to Company as follows:

a. The reimbursement each calendar year in an amount equal to (1) the City's ad valorem property tax rate, multiplied by (2) the percentage set forth in the chart below for the year to which the Grant relates, multiplied by (3) the difference between (i) the Taxable Value of the Land for the year to which the Grant relates, less (ii) $18,103,981 (the agreed Taxable Value of the Land for the year beginning January 1, 2022):

Grant Term Year	Percentage of City Taxes Used to Calculate Grant
2024	20%
2025	20%
2026	20%
2027	16%
2028	16%
2029	16%
2030	16%
2031	8%

Each such Grant shall be paid by the City to Company within thirty (30) days following receipt by the City of (i) the ad valorem tax payment corresponding to such Grant, (ii) Investment Reports (due under Section 4(a) of this Agreement), and (iii) Employment Reports (due under Section 4(b) of this Agreement). The Grant shall commence on January 1, 2024, and shall continue for a period of eight (8) consecutive calendar years thereafter; provided, however, no Property Improvements shall be eligible for a Grant after eight (8) calendar years from the commencement date, regardless of circumstance or the date of completion of construction of the Property Improvements.

4. **Conditions to Qualify for Grants**. Each of the following conditions must be satisfied by Company for the entire Term (defined below) of this Agreement in order to qualify for the Grants:

a. The Capital Investment in the Property Improvements shall meet or exceed the aggregate amount of $8.1 million as of January 1, 2024. Company shall provide the City with reports in a form reasonably acceptable to the City certifying Company's compliance with the minimum Capital Investment set forth herein (the "**Investment Reports**"). The Investment Reports shall be prepared and maintained in accordance with generally accepted accounting principles and shall include information on the extent and the amount of Company's investments in the Property Improvements. Company agrees to submit the Investment Reports no later than thirty (30) days after January 1, 2024 and on or before January 31 of each successive calendar year during the Term of this Agreement. The City shall have the right to inspect Company's books and records relating to the construction of the Property

Improvements and the acquisition, location and maintenance of the Property Improvements.

b. The continuous employment and retention of no fewer than 74 Employment Positions at the Premises beginning on the Effective Date and throughout the term of this Agreement. Within thirty (30) days after the Effective Date and then as part of its Certification of Compliance each successive year thereafter during the Term of this Agreement, Company agrees to provide the City with reports in a form acceptable to the City certifying Company's compliance with the above commitment to Employment Positions and shall include information on the number of Employment Positions created or filled at the Premises (the "**Employment Reports**"). The City shall have the right to inspect Company's payroll and other employment records, including Company's management system assigned to the Premises, relating to the Employment Positions on the Premises.

c. Company's continuous compliance with all terms, conditions, covenants and obligations of this Agreement.

d. Subject only to events of Force Majeure, Company or Company's Affiliate's continuous ownership and occupancy of the Premises and operation and maintenance of the Premises as a beverage manufacturing facility.

e. At the time of payment of any portion of the Grants, Company must not be liable for Delinquent Ad Valorem Taxes.

f. The City, its agents and employees shall have the right of reasonable access to inspect the Property Improvements at reasonable times and with reasonable notice to Company, and in accordance with Company's visitor access and security policies, to ensure that the operation of the Property Improvements is in accordance with this Agreement and all applicable state and local laws, codes, and regulations. After completion of construction of any of the Property Improvements, the City, its agents and employees shall have the continuing right to inspect the Property Improvements at reasonable times with reasonable notice to Company, and in accordance with Company's reasonable visitor access and security policies, to ensure that the Property Improvements are thereafter maintained and operated in accordance with this Agreement during the Term of this Agreement.

If, after all the conditions set forth above have been initially satisfied, any of the conditions set forth above are thereafter not satisfied during any calendar year for which a Grant is calculated or due and if such failure of a condition is not cured within thirty (30) days after written notice from the City to Company of such failure, the City will be relieved of its obligation to pay the portions of the Grants related to such calendar year; provided, however, that the subsequent failure of any of the conditions set forth above (after such conditions have been initially satisfied) will not constitute a default hereunder, unless such failure is not cured prior to the expiration of the notice and cure period set forth in Section 6(b). Furthermore, in the event the City provides any portion of a Grant to Company for a particular period based upon a statement or information provided by Company to the City

that is incorrect and which, if corrected, would have resulted in Company not being entitled to the portion of such Grant related to the applicable period for which the statement or information was provided, then Company will refund to the City the portion of such Grant which Company received based upon such statement or information within thirty (30) days after receipt of written demand by the City, subject to the right to cure and seek remedies under Section 6. If Company fails to refund such portion of the Grant as provided above, the City will be relieved of its obligation to pay Grants for the period of time that such refund remains unpaid and shall have the right to bring an action against Company for the payment of such refund.

5. **Term of this Agreement**. The term of this Agreement will commence on the Effective Date and will continue until the earlier to occur of the date that the City and Company mutually agree to terminate this Agreement or the date the City's obligation to pay the Grants set forth in Section 3 above expires (the "**Term**").

6. **Default**.

a. Each of the following will constitute an "Event of Default" under this Agreement:

(i) the City's failure to process any portion of the Grants owing to Company in accordance with this Agreement;

(ii) Company's failure to satisfy any of the conditions set forth in Section 4 above;

(iii) Company's failure to pay any Delinquent Ad Valorem Taxes owed to the City or any other taxing authority;

(iv) Company's suffering an Event of Bankruptcy or Insolvency;

(v) a breach of any representation or covenant made in this Agreement by Company; or

(vi) an attempted assignment of this Agreement by Company in violation of the terms set forth in Section 7 hereof.

b. Upon the occurrence of an Event of Default, the City shall notify Company in writing. Company shall have ninety (90) days from receipt of the notice in which to cure any such default. If the default cannot reasonably be cured within a ninety (90) day period, other than a monetary default, and Company has diligently pursued such remedies as shall be reasonably necessary to cure such default, then the City shall extend the period in which the default must be cured for an additional sixty (60) days.

c. Upon the occurrence and during the continuance of an Event of Default, the City shall have all remedies available to it at law or in equity, including without limitation, termination of this Agreement.

d. Periods described above for curing a delinquency or violation hereunder shall toll, and shall not be considered for any purpose as having run, beginning on the day Company files a petition in district court in Grayson County, Texas to determine whether a delinquency or violation has in fact occurred under this Agreement and/or to determine whether any attempt to cure has been sufficient, and ending upon the issuance of a final court decision or other final resolution of such court proceeding.

7. **Assignment**. Except as may otherwise be provided under this Section 7, this Agreement may not be assigned without the City's prior written consent. Any purported assignment in violation of this Agreement is void. Notwithstanding the foregoing, so long as no Company Event of Default under this Agreement exists and remains uncured, Company may, without the prior written consent of the City, (a) assign its rights and obligations under this Agreement to an Affiliate of Company, so long as such Affiliate continues to be wholly-owned, directly or indirectly, by Company or one of its constituent parties and Company notifies the City in advance of such assignment and provides evidence reasonably satisfactory to the City that such assignee is an Affiliate, or (b) make a collateral assignment of the Agreement solely for the benefit of a creditor providing financing for the Property Improvements. In the event the City consents to an assignment of this Agreement by Company, no further assignment shall be made without the express consent in writing of the City, unless such assignment may otherwise be made without such consent pursuant to the terms of this Agreement. Except as otherwise set forth herein, an assignment by Company of its interest in this Agreement shall not relieve Company from its obligations under this Agreement unless approved by the City.

8. **Indemnification**.

a. IN ADDITION TO THE OTHER REMEDIES AFFORDED TO THE CITY IN THIS AGREEMENT, COMPANY SHALL RELEASE, INDEMNIFY, DEFEND AND HOLD HARMLESS THE CITY, ITS COUNCILMEMBERS, OFFICERS, EMPLOYEES, ATTORNEYS, CONTRACTORS, OR AGENTS (HEREINAFTER "CITY'S INDEMNIFIED PARTY") FOR, FROM AND AGAINST ANY AND ALL LOSSES, LIENS, CAUSES OF ACTION, SUITS, JUDGMENTS AND EXPENSES (INCLUDING, WITHOUT LIMITATION, COURT COSTS, ATTORNEYS' FEES AND COSTS OF INVESTIGATION, REMOVAL AND REMEDIATION, AND GOVERNMENTAL OVERSIGHT COSTS), ENVIRONMENTAL OR OTHERWISE OF ANY NATURE, KIND OR DESCRIPTION OF ANY PERSON OR ENTITY DIRECTLY OR INDIRECTLY ARISING OUT OF, RESULTING FROM, OR RELATED TO (IN WHOLE OR IN PART) COMPANY'S PERFORMANCE OF ITS OBLIGATIONS PURSUANT TO THIS AGREEMENT.

b. The City's Indemnified Party shall promptly notify Company of any indemnified Losses or Claim for indemnified Losses in respect of which the City's Indemnified Party may be entitled to indemnification under this Section 8. Such notice shall be given as soon as reasonably practicable after the City's Indemnified Party becomes aware of the Loss or Claim for Losses.

c. In the event any action or proceeding shall be brought against the City's Indemnified Party by reason of any matter for which the City's Indemnified Party is indemnified hereunder, Company shall, upon notice from the City's Indemnified Party or its authorized agents or representatives, at Company's sole cost and expense, resist and defend the same with legal counsel selected by City. Company's obligation to defend shall apply regardless of whether the City's Indemnified Party is solely or concurrently negligent. Nothing herein shall be deemed to prevent the City's Indemnified Party at its election and at its own expense from participating in the defense of any litigation with their own counsel. If Company fails to retain defense counsel within seven (7) business days after receipt of City's Indemnified Party written notice that the City's Indemnified Party is invoking its right to indemnification under this Agreement, the City's Indemnified Party shall have the right to retain defense counsel on their own behalf, and Company shall be liable for all usual and customary defense costs incurred by the City's Indemnified Party.

9. **Miscellaneous**.

a. All construction will be in accordance with applicable rules, regulations, and ordinances of the City, subject to any variances granted in writing by the City.

b. It is acknowledged and agreed by the parties that the terms hereof are not intended to and will not be deemed to create a partnership or joint venture among the parties. It is further understood and agreed by the parties that Company and the City, in satisfying the conditions of this Agreement, have acted independently, and assume no responsibility or liability to third parties in connection with these actions.

c. This Agreement contains the entire understanding of the parties with respect to the matters contained herein and may not be modified or terminated except in accordance with the provisions hereof or by the mutual written agreement of the parties hereto.

d. This Agreement will be construed in accordance with the laws of the State of Texas and will be performable in Grayson County, Texas.

e. This Agreement will be binding upon and inure to the benefit of the parties hereto and their respective successors and assigns.

f. The individuals executing this Agreement on behalf of the respective parties below represent to each other and to others (i) that all appropriate and necessary action has been taken to authorize the individual who is executing this Agreement to do so for and on behalf of the party for which his or her signature appears, (ii) that there are no other parties or entities required to execute this Agreement in order for the same to be an authorized and binding agreement on the party for whom the individual is signing this Agreement, and (iii) that each individual affixing his or her signature hereto is authorized to do so and such authorization is valid and effective on the date hereof.

g. This Agreement is executed by the parties hereto without coercion or duress and for substantial consideration, the sufficiency of which is forever confessed.

h. Any notice and/or statement required and permitted to be delivered will be deemed delivered by depositing same in the United States mail, certified with return receipt requested, postage prepaid, addressed to the appropriate party at the following addresses:

If to the City:	City of Sherman, Texas 220 W. Mulberry Street Sherman, Texas 75090 Attn: City Manager
With required copy to:	Abernathy, Roeder, Boyd & Hullett, P.C. 1700 Redbud Blvd., Suite 300 McKinney, Texas 75069 Attn: Ryan Pittman
If to Broadstone HHH Texas LLC:	Harvest Hill Beverages Company 1 High Ridge Park Stamford, CT 06905 Attn: Tim Voelkerding

Each party may change the address to which notice may be sent to that party by giving notice of such change to the other parties in accordance with the provisions of this Agreement.

i. This Agreement may be executed in any number of identical counterparts, each of which will be deemed an original for all purposes.

j. In case any one or more of the provisions contained in this Agreement will for any reason be held invalid, illegal, or unenforceable in any respect, such invalidity, illegality, or unenforceability will not affect any other provision hereof, and this Agreement will be construed as if such invalid, illegal, or unenforceable provision had never been contained herein. If any subsequent federal or state legislation or any decision of a court of competent jurisdiction declares or renders this Agreement or any part hereof invalid or illegal, the parties agree to terminate (or if feasible, modify) this Agreement and to negotiate in good faith a remedy that preserves the intent of the parties hereunder as much as reasonably possible.

k. Each signatory represents this Agreement has been read by the party for which this Agreement is executed and that such party has had an opportunity to confer with its counsel.

l. Time is of the essence in this Agreement.

m. The recitals to this Agreement are incorporated herein for all purposes. The following exhibits are attached to this Agreement and incorporated by reference herein for all purposes:

Exhibit "A" — Property

Exhibit "B" — Property Improvements

n. The parties agree this Agreement has been drafted jointly by the parties and their legal representatives.

o. Nothing in this Agreement will be implied to vest any rights in the parties. In addition, nothing contained in this Agreement will constitute a "permit" as defined in Chapter 245, Texas Local Government Code. **THE COMPANY WAIVES ANY CLAIM THAT THIS AGREEMENT ESTABLISHES VESTED RIGHTS UNDER CHAPTER 245 OF THE TEXAS LOCAL GOVERNMENT CODE OR OTHER LAW. THIS SECTION WILL SURVIVE THE TERMINATION OF THIS AGREEMENT.**

p. It is expressly understood that this Agreement will be binding upon and benefit the parties hereto only upon execution by both parties.

q. Pursuant to Section 2270.002, Texas Government Code, Company hereby represents that neither Company, nor any wholly owned subsidiary, majority-owned subsidiary, parent company or affiliate of Company "boycotts Israel", and subject to or as otherwise required by applicable federal law, including without limitation 50 U.S.C. Section 4607, agrees it will not boycott Israel during the term of this Agreement. As used in the immediately preceding sentence, "boycott Israel" shall have the meaning given such term in Section 2271.001, Texas Government Code.

r. Pursuant to Subchapter F, Chapter 2252, Texas Government Code, Company certifies that it is not engaged in business with Iran, Sudan or a foreign terrorist organization.

s. Pursuant to Chapter 2274, Texas Government Code, Company verifies that (i) it does not boycott energy companies and will not boycott energy companies during the term of this Agreement and (ii) it does not have a practice, policy, guidance or directive that discriminates against a firearm entity or firearm trade association and will not discriminate against a firearm entity or firearm trade association during the term of this Agreement.

t. Pursuant to Chapter 2264, Texas Government Code, Company represents and certifies that is does not and will not knowingly employ any undocumented worker at the Facility or on the Property who is not lawfully admitted for permanent residence to the United States or authorized under law to be employed in the United States. If, after receiving any public subsidy from the City under this Agreement, Company is convicted of a violation under 8 U.S.C. § 1342a(f), Company shall

repay to the City an amount equal to all Grant payments tendered to Company under this Agreement plus interest at the annual rate of four percent (4%) not later than the 120th day after the date the public agency, state or local taxing jurisdiction notifies Company of such violation.

IN WITNESS WHEREOF, the parties have executed this Agreement and caused this Agreement to be effective when all the parties have signed it. The date this Agreement is signed by the last party to sign it (as indicated by the date associated with that party's signature below) will be deemed the effective date of this Agreement ("Effective Date").

CITY OF SHERMAN, TEXAS,
a home-rule municipality

By:_____
Robby Hefton, City Manager
Date: _____

ATTEST:

By:_____
Linda Ashby, City Clerk

APPROVED AS TO FORM:

By:_____
Ryan D. Pittman, City Attorney

BROADSTONE HHH TEXAS LLC,
a New York limited liability company

By: Robert Farnan

Name: Robert Farnan

Date: April 9, 2024

Exhibit A
Legal Description of the Land

MEASURED DESCRIPTION

DESCRIPTION OF A 64.401 ACRE TRACT SITUATED IN THE WILLIAM MARTIN SURVEY, ABSTRACT NO. 765, CITY OF SHERMAN, GRAYSON COUNTY, TEXAS, AND BEING ALL OF THAT TRACT OF LAND CONVEYED TO AGNL BEVERAGES (TX), L.P. BY SPECIAL WARRANTY DEED RECORDED IN VOLUME 5732, PAGE 308, OFFICIAL PUBLIC RECORDS, GRAYSON COUNTY, TEXAS; SAID 64.401 ACRE TRACT BEING MORE PARTICULARLY DESCRIBED BY MEETS AND BOUNDS AS FOLLOWS:

BEGINNING, AT A "+" CUT IN CONCRETE FOUND MARKING THE NORTHEAST CORNER OF THE SAID 64.401 ACRE TRACT AT THE INTERSECTION OF THE SOUTH RIGHT-OF-WAY LINE OF F.M. HIGHWAY NO. 1417 (VARIABLE WIDTH) WITH THE CENTER OF A PUBLIC ROAD TO THE SOUTH LOCALLY KNOWN AS HOWE DRIVE RUNNING ALONG OR NEAR THE EAST LINE OF THE SAID MARTIN SURVEY;

THENCE, SOUTH 14 DEGREES 08 MINUTES 48 SECONDS EAST, WITH SAID CENTER OF HOWE DRIVE, A DISTANCE OF 2433.63 FEET TO A POINT AT THE SOUTHEAST CORNER OF THE SAID 64.401 ACRE TRACT AND THE NORTHEAST CORNER OF SHERMAN INDUSTRIAL DEVELOPMENT ADDITION TO SAID CITY OF SHERMAN, TEXAS ACCORDING TO THE PLAT OF RECORD IN VOLUME 24, PAGE 40, PLAT RECORDS, GRAYSON COUNTY, TEXAS;

THENCE, SOUTH 74 DEGREES 48 MINUTES 39 SECONDS WEST, WITH THE SOUTH LINE OF THE SAID 64.401 ACRE TRACT, PASSING AT A DISTANCE OF 40.00 FEET THE NORTHEAST CORNER OF LOT 3, BLOCK 1 OF SAID SHERMAN INDUSTRIAL DEVELOPMENT ADDITION; CONTINUING, IN ALL, A TOTAL DISTANCE OF 527.51 FEET TO A POINT MARKING THE SOUTHEAST CORNER OF A TRACT OF LAND CONVEYED TO SHERMAN ECONOMIC DEVELOPMENT CORPORATION BY DEED RECORDED IN VOLUME 4895, PAGE 876, OFFICIAL PUBLIC RECORDS; SAID POINT ALSO BEING AT THE INTERSECTION OF SAID SOUTH LINE OF THE SAID 64.401 ACRE TRACT WITH THE EAST RIGHT-OF-WAY LINE OF THE EASEMENT CONVEYED TO THE ST. LOUIS, SAN FRANCISCO AND TEXAS RAILWAY COMPANY RECORDED IN VOLUME 945, PAGE 490, DEED RECORDS, GRAYSON COUNTY, TEXAS;

THENCE, WITH THE COMMON LINE OF SAID 64.401 ACRE TRACT AND SAID RIGHT-OF-WAY LINE, THE FOLLOWING METES AND BOUNDS;

NORTH 59 DEGREES 06 MINUTES 38 SECONDS WEST, A DISTANCE OF 331.98 FEET TO A POINT MARKING THE BEGINNING OF A CURVE TO THE RIGHT HAVING A RADIUS OF 1885.08 FEET;

NORTHWESTERLY, WITH SAID CURVE TO THE RIGHT, (CHORD BEARS NORTH 36 DEGREES 28 MINUTES 48 SECONDS WEST, 1450.72 FEET), AN ARC DISTANCE OF 1489.13 FEET TO A 1/2" IRON ROD WITH PLASTIC CAP STAMPED "RPLS 5433" FOUND MARKING AN "L" CORNER;

NORTH 76 DEGREES 09 MINUTES 02 SECONDS EAST, A DISTANCE OF 25.00 FEET TO A 1/2" IRON ROD FOUND MARKING ANOTHER "L" CORNER;

NORTHWESTERLY, WITH A CURVE TO THE RIGHT HAVING A RADIUS OF 1860.08 FEET, (CHORD BEARS NORTH 11 DEGREES 46 MINUTES 26 SECONDS WEST, 134.73 FEET), AN ARC DISTANCE OF 134.76 FEET TO A 1/2" IRON ROD WITH PLASTIC CAP STAMPED "RPLS 5433" FOUND THE END OF SAID CURVE;

NORTH 09 DEGREES 41 MINUTES 54 SECONDS WEST, A DISTANCE OF 743.13 FEET TO A POINT MARKING THE NORTHWEST CORNER OF SAID 64.401 ACRE TRACT; SAID POINT ALSO BEING THE NORTHEAST CORNER OF THE SAID SHERMAN ECONOMIC DEVELOPMENT CORPORATION TRACT; SAID POINT ALSO BEING ON SAID SOUTH RIGHT-OF-WAY LINE F.M. HIGHWAY NO. 1417;

THENCE, WITH THE SAID SOUTH RIGHT-OF-WAY LINE OF F.M. HIGHWAY NO. 1417, THE FOLLOWING METES AND BOUNDS;

NORTH 73 DEGREES 56 MINUTES 00 SECONDS EAST, A DISTANCE OF 1057.58 FEET TO A POINT FOR ANGLE AT THE WEST BASE OF A DISTURBED CONCRETE MONUMENT FOUND;

SOUTH 87 DEGREES 28 MINUTES 00 SECONDS EAST, A DISTANCE OF 156.68 FEET TO A "+" CUT IN CONCRETE FOUND AT AN ANGLE POINT;

NORTH 73 DEGREES 56 MINUTES 00 SECONDS EAST, A DISTANCE OF 18.00 FEET TO THE POINT OF BEGINNING AND CONTAINING 2,805,290 SQUARE FEET OR 64.401 ACRES OF LAND.

SURVEYOR'S CERTIFICATION

To: BANK OF AMERICA, N.A., a national banking association, as Administrative Agent for the Lenders, its successors and/or assigns, CF Alpha 8 Golf Propco LLC, a Delaware limited liability company, its successors and assigns; Broadstone HHH Texas, LLC; First American Title Insurance Company; Pircher, Nichols & Meeks LLP; and the Matthews Company, Inc.

This is to certify that this map or plat and the survey on which it is based were made in accordance with the 2016 Minimum Standard Detail Requirements for ALTA/NSPS Land Title Surveys, jointly established and adopted by ALTA and NSPS, and includes items 1, 2, 3, 4, 6(a), 6(b), 7(a), 7(b)(1), 7(c), 8, 9, 13, 14, 16, 17, 18, 19 and 20 of Table A thereof. The fieldwork was completed on May 29, 2019.

Date of Plat or Map: May 30, 2019

Robert W. Schneeberg, Texas R.P.L.S. No. 4804
Gonzalez & Schneeberg, Engineers & Surveyors, Inc.
2100 Lakeside Boulevard, Suite 200
Richardson, Texas 75082
Phone (972) 516-8855
email: robert.schneeberg@gs-engineers.com
GSES 6891-19-05-04
Date: May 30, 2019
Date of Last Revision: August 14, 2019

The property described and shown hereon is the same property described in First American Title Insurance Company Title Commitment GF No. 3020-958726TX3I, effective date May 3, 2019.

Exhibit B
Property Improvements

Approximately $8.1 million in real property improvements, consisting of:

1. Building renovation
2. Utilities upgrade
3. Batching and processing equipment
4. Packaging equipment
5. Mechanical and electrical installation
6. Engineering and other miscellaneous costs

citrix | RightSignature

SIGNATURE CERTIFICATE

REFERENCE NUMBER
2B61BED7-9B33-490B-BF7E-9E8176D8A62B

TRANSACTION DETAILS	DOCUMENT DETAILS
Reference Number 2B61BED7-9B33-490B-BF7E-9E8176D8A62B	**Document Name** Broadstone HHH Texas Harvest Hill Chapter 380 Real Property ID 372587
Transaction Type Signature Request	**Filename** Broadstone_HHH_Texas_Harvest_Hill_Chapter_380_Real_Property_ID_372587_.pdf
Sent At 04/09/2024 09:43 EDT	**Pages** 13 pages
Executed At 04/09/2024 09:44 EDT	**Content Type** application/pdf
Identity Method email	**File Size** 336 KB
Distribution Method email	**Original Checksum** 2b292968d43c63576afdf0f72ffbc6976731967e05f1d04208016a821d2df28d
Signed Checksum b1a42faa3feef454c16435d66542f449545ccc92a51ac63e504a61fe22e0f774	
Signer Sequencing Disabled	
Document Passcode Disabled	

SIGNERS

SIGNER	E-SIGNATURE	EVENTS
Name Bob Farnan	**Status** signed	**Viewed At** 04/09/2024 09:44 EDT
Email bob.farnan@broadstone.com	**Multi-factor Digital Fingerprint Checksum** b876e09d4ffb67d3cf9df2227a9c815d17bea6f46c268c29cb0c04eb0d0ab93e	**Identity Authenticated At** 04/09/2024 09:44 EDT
Components 1	**IP Address** 72.225.59.242	**Signed At** 04/09/2024 09:44 EDT
	Device Chrome via Windows	
	Typed Signature Robert Farnan	
	Signature Reference ID 4C909287	

AUDITS

TIMESTAMP	AUDIT
04/09/2024 09:43 EDT	Cindy Pisella (cindy.pisella@broadstone.com) created document 'Broadstone_HHH_Texas_Harvest_Hill_Chapter_380_Real_Property_ID_372587_.pdf' on Microsoft Edge via Windows from 151.181.193.66.
04/09/2024 09:43 EDT	Bob Farnan (bob.farnan@broadstone.com) was emailed a link to sign.
04/09/2024 09:44 EDT	Bob Farnan (bob.farnan@broadstone.com) viewed the document on Chrome via Windows from 72.225.59.242.
04/09/2024 09:44 EDT	Bob Farnan (bob.farnan@broadstone.com) authenticated via email on Chrome via Windows from 72.225.59.242.
04/09/2024 09:44 EDT	Bob Farnan (bob.farnan@broadstone.com) signed the document on Chrome via Windows from 72.225.59.242.

SHERMAN CITY COUNCIL
Agenda Communication Form

City Council Regular Meeting Agenda Item No. H.2.

Meeting Date: 4/15/2024

Prepared By: Tom Pruitt, Utility Engineer

Approved By: Robby Hefton, City Manager

Caption:

RESOLUTION NO. 7282

Approving the Greater Texoma Utility Authority's Intention to Amend Contract Language to Article 8, Contingency Funds, to Kiewit Water Facilities South Co.

Issue:

To approve the Greater Texoma Utility Authority's intention to amend contract language to Article 8, Contingency Funds.

Background:

The purpose of the contract language revision is required to allow the City of Sherman / GTUA to use funds previously allocated as CMAR Kiewit Water Facilities South contingency funds. Contingency within this project is about 10% or $25 million dollars. These funds will be utilized for Contract Amendments, Potential Change Orders (PCO's), and other project-related uses as needed until additional funding is available to finish the project. Additional funding is proposed to be available in the fall of this year.

Origination:

Engineering Department

Financial Consideration:

Funds were allocated in 2023A and 2024 GTUA Open Market (OM) bonds.

Staff Recommendation:

It is recommended that the City Council approve GTUA’s intention to amend the contract language to Kiewit Water Facilities South for the South Wastewater Treatment Plant.

Alternatives:

As may be directed by the City Council.

Attachments:

1. Resolution No. 7282
2. Location Map
3. COSK-KWT-CMS-LTR0039 Revised CMAR Contingency
4. COSK-KWT-CMS-LTR-0039 Revised CMAR Contingency (CHANGES ACCEPTED)
5. City Council Meeting Update 20240415 - Kiewit

RESOLUTION NO. 7282

A RESOLUTION OF THE CITY COUNCIL OF THE CITY OF SHERMAN, TEXAS, APPROVING THE GREATER TEXOMA UTILITY AUTHORITY'S INTENTION TO AMEND CONTRACT LANGUAGE TO ARTICLE 8, CONTINGENCY FUNDS, TO KIEWIT WATER FACILITIES SOUTH CO.; FINDING AND DETERMINING THAT THE MEETING AT WHICH THIS RESOLUTION IS PASSED WAS NOTICED AND IS OPEN TO THE PUBLIC AS REQUIRED BY LAW.

BE IT RESOLVED BY THE CITY COUNCIL OF THE CITY OF SHERMAN, TEXAS:

SECTION 1. That the City of Sherman hereby approves the Greater Texoma Utility Authority's intention to amend contract language to Article 8, Contingency Funds to Kiewit Water Facilities South Co.

SECTION 2. That it is hereby officially found and determined that the meeting at which this resolution is passed is open to the public and that public notice of the time, place, and purpose of said meeting was given as required by law.

DULY PASSED AND APPROVED BY THE CITY COUNCIL OF THE CITY OF DORCHESTER, TEXAS on this 15th day of April 2024.

CITY OF SHERMAN, TEXAS

BY: _____
DAVID PLYLER, MAYOR

ATTEST:

BY: _____
LINDA ASHBY, CITY CLERK

APPROVED AS TO FORM AND CONTENT:
THE LAW FIRM OF ABERNATHY,
ROEDER, BOYD & HULLETT, P.C.

BY: _____
RYAN D. PITTMAN, CITY ATTORNEY

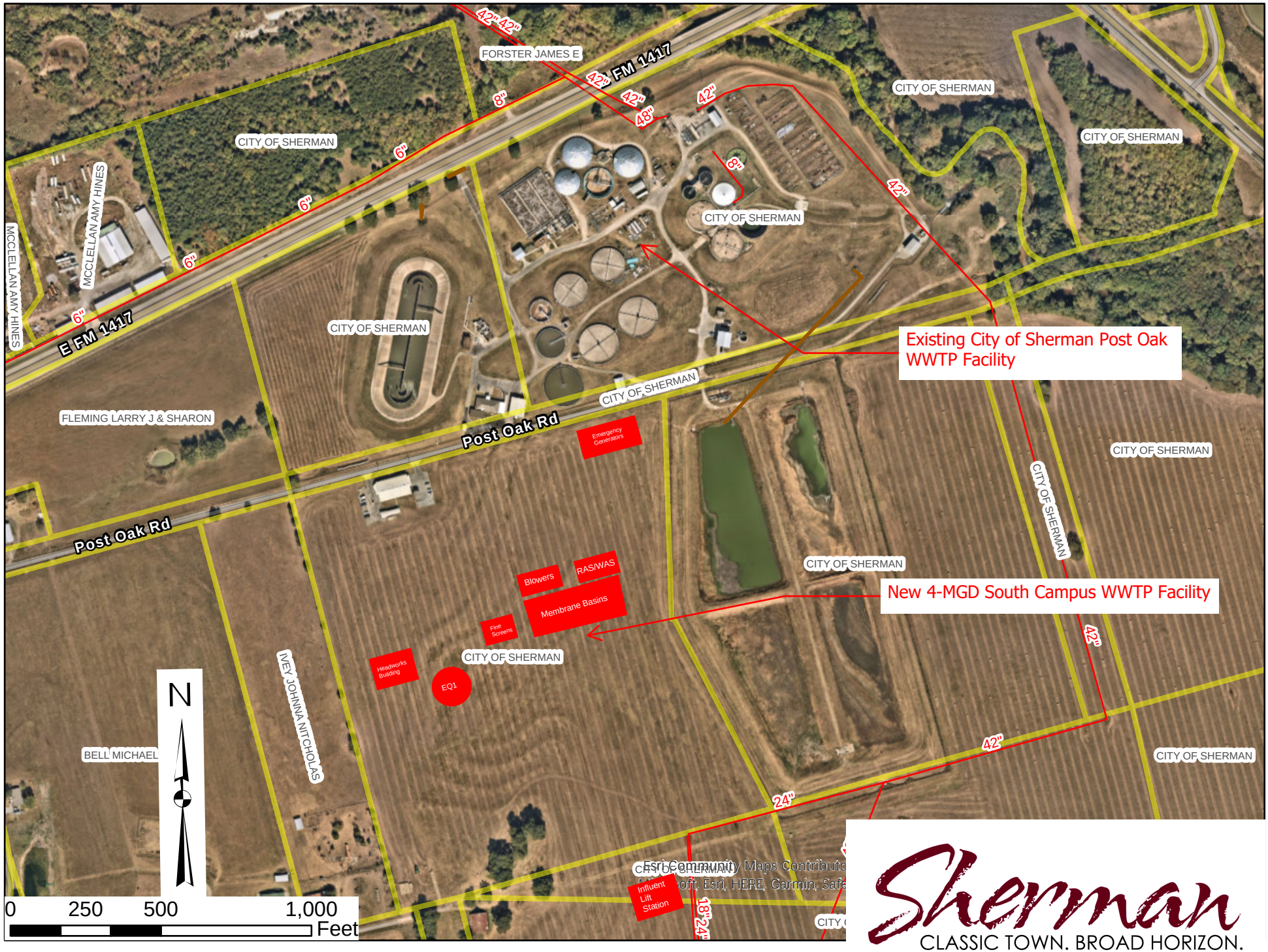
Existing City of Sherman Post Oak WWTP Facility
New 4-MGD South Campus WWTP Facility
FM 1417
E FM 1417
Post Oak Rd
Post Oak Rd
FORSTER JAMES E
CITY OF SHERMAN
MCCLELLAN AMY HINES
FLEMING LARRY J & SHARON
BELL MICHAEL
IVEY JOHNNA NITCHOLAS
Emergency Generators
Blowers
RAS/WAS
Membrane Basins
Fine Screens
Headworks Building
EQ1
Influent Lift Station
42"
48"
24"
18"
8"
6"
N
0
250
500
1,000
Feet
Esri Community Maps Contributo
Sherman
CLASSIC TOWN. BROAD HORIZON.

South WWTP – MBR Project

March 8, 2024

City of Sherman (COS)
220 W. Mulberry Street
Sherman, TX 75090

Attn: Alan Davis

Subject: Revised CMAR Contingency 2
Reference: COSK-KWT-CMS-LTR-0037 Revised CMAR Contingency

Dear Mr. Davis,
CMAR met with COS attorneys on March 6, 2024, to discuss revisions to contract language to allow the Owner to leverage CMAR Contingency amounts to fund additional Owner Contingency and GMP's to progress the schedule until such time that the Owner can obtain additional funding. That timeframe for the Owner to obtain additional funding and establish a new budget shall be before October 31, 2024. The revised language is attached. If the changes can be ageed upon by March 12, 2024 there is a chance they could get approved at the next City Council Meeting on March 18, 2024.

CMAR understands that funding for the Change Order for WCD-001 will be delayed until the Owner is able to increase the current $258M budget. Deferring execution of the Change Order for WCD-001 in no way diminishes the contractual obligation of the Owner to fund and execute a Change Order for WCD-001 UG Pipe scope. CMAR has agreed to continue to execute the WCD-001 scope of work to avoid delaying the project. Execution of a final GMP prior to executing any outstanding WCDs in no way changes the Owner's obligation to fund and execute any outstanding Change Orders. CMAR may not be able to include all outstanding WCDs with a final GMP due to a lack of Owner funding.

Sincerely,

Kiewit Water Facilities South Co.

Kory Kyllo, Project Manager
South WWTP – MBR

CC:	GTUA	Paul Sigle, Nichole Murphy
	COS	Tom Pruitt, Clint Philpott, Wayne Lee
	Engineer	Sherri van der Wege, David Gudal, Brian Beach, Thomas Young
	Owner's Rep	Ron Mick, Hugh Brightwell
	Kiewit	James Goyer, TJ Paul, Kory Kyllo, Colin Bunker, Charles Wampler, John Lavelle

Attachment: Revised Contract Language

Language that will not need revision:

1. Cost Proposal (Proposal Form 2)

2.03 Contingency Funds: Contingency Funds: 3-12 percent of Cost of Work.
The percentage stated in Article 2.03 above is the maximum amount of Contingency Funds to be included in the Guaranteed Maximum Price and the maximum amount of Contingency Funds to be paid the CMAR. The Contingency funds will be returned to the Owner (GTUA) if not spent.

2. Construction Management At Risk Services Agreement

Article 6: CMAR's Construction Services Fee

6.02 As funds are utilized for contingency work in accordance with Article 8 of this Agreement, CMAR shall be paid nine-point nine five percent (9.95%) of the contingency funds utilized as its fee for construction services associated with the contingency work.

Language that will need revision:

ARTICLE 8: CONTINGENCY FUNDS

8.01 The contingency funds are for the exclusive use of the CMAR while executing the Work to reimburse the CMAR for Costs of Work due to unforeseen causes or details not capable of reasonable anticipation at the time of the execution of the Agreement; such contingency funds are not intended for changes in the scope of the Work or for reimbursement of expenses and costs not otherwise recoverable as a Cost of Work under Paragraph 11.01 of the General Conditions of the Construction Contract. The contingency funds shall not be allocated to any particular line item in the Cost of Work.

8.02 The amount of the contingency funds shall be as agreed between the parties when they develop the Guaranteed Maximum Price. Contingency funds will be additive as GMPs are approved and can be used in any aspect of the Work.

8.03 Subject to prior written approval by the GTUA/City of Sherman, the contingency funds may be used for costs incurred in accordance with this Article by the CMAR. The CMAR shall prepare and submit to GTUA/City of Sherman a detailed listing and written justification as to the need to use any part of the contingency funds. GTUA/City of Sherman's approval for such use will not be unreasonably withheld. Approval or concise reasons for disapproval will be provided by GTUA/City of Sherman within 48 hours of receipt of request. Charges against the contingency funds will be tabulated and reported by the CMAR as part of the CMAR's monthly Progress Meeting. CMAR will also provide a tracking system for the measurement and transfer of contingency accounts.

8.04 It is understood that the amount of any such contingency funds is the maximum amount available to the CMAR to cover costs incurred in accordance with this Article and that all cost overruns in excess of the contingency funds will be borne by the CMAR. As an incentive, any unused CMAR Contingency funds can be shared with 60% retained by the Owner and 40% to the contractor at the discretion of GTUA/City of Sherman.

Suggested Revision to Article 8:

ARTICLE 8: CONTINGENCY FUNDS

8.01 The City will establish a Contingency Account, further described in Paragraph 8.04, from which to allocate amounts to the Contingency Fund. The A Contingency Fund will be established at $20,000,000. This The cContingency Ffunds is are for the exclusive use of the CMAR while executing the Work to reimburse the CMAR for costs Costs of Work due to unforeseen causes or details not capable of reasonable anticipation at the time of the execution of the Agreement. ; such The cContingency Ffunds may not be used are not intended for changes in the scope of the Work or for reimbursement of expenses and costs not otherwise recoverable as a Cost of Work under Paragraph 11.01 of the General Conditions of the Construction Contract. The The cContingency Ffunds will shall not be allocated to any particular line item in the Cost of Work, and CMAR may apply the Contingency Fund to any items of Work performed under the Contract Documents.

8.02 The amount of the contingency funds shall be as agreed between the parties when they develop the Guaranteed Maximum Price. Contingency funds will be additive as GMPs are approved and can be used in any aspect of the Work. NOT USED.

8.023 Costs for discrete items above $10,000 are subject to Subject to prior written approval by the GTUA/City of Sherman, the contingency funds may be used for costs incurred in accordance with this Article by the CMAR. For such items, The CMAR shall will prepare and submit to GTUA/City of Sherman a detailed listing and written justification as to the need to use the any part of the cContingency Ffunds. GTUA/City of Sherman's approval for such use will not be unreasonably withheld. Approval or concise reasons for disapproval will be provided by GTUA/City of Sherman within 48 hours of receipt of a request.

8.034 It is understood that the entire agreed Contingency Fund is available to CMAR to cover costs incurred in accordance with this Article. Any cost overruns in excess of the agreed Contingency Fund amount in Paragraph 8.01 will be borne by CMAR.

8.04 The parties acknowledge that while the Contingency Fund is a component of the GMP, Owner will maintain a separate Contingency Aaccount in order to distribute amounts to the for the Contingency Fund. Notwithstanding other provisions off this article, Owner may utilize this Contingency Account at its discretion and as necessary in its allocation of Project funding. As such, It it is possible likely that the Contingency Aaccount, at any given time, may not reflect the actual amount of the Contingency Fund available for use by CMAR under this Article.

8.05 Charges against the Ccontingency Ffunds will be tabulated and reported by the CMAR as part of the CMAR's monthly Progress Meeting. CMAR will also will provide a tracking system for the measurement and transfer of contingency amountsaccounts. Owner will provide a periodic status of the amount in the Contingency Aaccount that is available for the Contingency Fund. Notwithstanding Owner's accounting, the amount reflected in Paragraph Article 8.01 will be made available to CMAR.

~~8.04 It is understood that the amount of any such contingency funds is the maximum amount available to the CMAR to cover costs incurred in accordance with this Article and that all cost overruns in excess of the contingency funds will be borne by the CMAR.~~

8.06 Only if GTUA/City of Sherman chooses, ~~As an incentive, any~~ unused amounts from the ~~CMAR~~ initial CMAR Contingency F~~f~~und~~s~~ identified in Paragraph 8.01 may ~~can will~~ be shared, with 60% retained by ~~the~~ Owner and 40% to CMAR ~~the contractor at the discretion of GTUA/City of Sherman~~.

Language that will not need revision:

1. Cost Proposal (Proposal Form 2)

2.03 Contingency Funds: Contingency Funds: 3-12 percent of Cost of Work.
The percentage stated in Article 2.03 above is the maximum amount of Contingency Funds to be included in the Guaranteed Maximum Price and the maximum amount of Contingency Funds to be paid the CMAR. The Contingency funds will be returned to the Owner (GTUA) if not spent.

2. Construction Management At Risk Services Agreement

Article 6: CMAR's Construction Services Fee

6.02 As funds are utilized for contingency work in accordance with Article 8 of this Agreement, CMAR shall be paid nine-point nine five percent (9.95%) of the contingency funds utilized as its fee for construction services associated with the contingency work.

Language that will need revision:

ARTICLE 8: CONTINGENCY FUNDS

8.01 The contingency funds are for the exclusive use of the CMAR while executing the Work to reimburse the CMAR for Costs of Work due to unforeseen causes or details not capable of reasonable anticipation at the time of the execution of the Agreement; such contingency funds are not intended for changes in the scope of the Work or for reimbursement of expenses and costs not otherwise recoverable as a Cost of Work under Paragraph 11.01 of the General Conditions of the Construction Contract. The contingency funds shall not be allocated to any particular line item in the Cost of Work.

8.02 The amount of the contingency funds shall be as agreed between the parties when they develop the Guaranteed Maximum Price. Contingency funds will be additive as GMPs are approved and can be used in any aspect of the Work.

8.03 Subject to prior written approval by the GTUA/City of Sherman, the contingency funds may be used for costs incurred in accordance with this Article by the CMAR. The CMAR shall prepare and submit to GTUA/City of Sherman a detailed listing and written justification as to the need to use any part of the contingency funds. GTUA/City of Sherman's approval for such use will not be unreasonably withheld. Approval or concise reasons for disapproval will be provided by GTUA/City of Sherman within 48 hours of receipt of request. Charges against the contingency funds will be tabulated and reported by the CMAR as part of the CMAR's monthly Progress Meeting. CMAR will also provide a tracking system for the measurement and transfer of contingency accounts.

8.04 It is understood that the amount of any such contingency funds is the maximum amount available to the CMAR to cover costs incurred in accordance with this Article and that all cost overruns in excess of the contingency funds will be borne by the CMAR. As an incentive, any unused CMAR Contingency funds can be shared with 60% retained by the Owner and 40% to the contractor at the discretion of GTUA/City of Sherman.

Suggested Revision to Article 8:

ARTICLE 8: CONTINGENCY FUND

8.01 The City will establish a Contingency Account, further described in Paragraph 8.04, from which to allocate amounts to the Contingency Fund. The Contingency Fund will be established at $20,000,000. This Contingency Fund is for the exclusive use of the CMAR while executing the Work to reimburse the CMAR for costs due to unforeseen causes or details not capable of reasonable anticipation at the time of the execution of the Agreement. The Contingency Funds may not be used for changes in the scope of the Work or for reimbursement of expenses and costs not otherwise recoverable as a Cost of Work under Paragraph 11.01 of the General Conditions of the Construction Contract. The Contingency Fund will not be allocated to any particular line item in the Cost of Work, and CMAR may apply the Contingency Fund to any items of Work performed under the Contract Documents.

8.02 Costs for discrete items above $10,000 are subject to prior written approval by the GTUA/City of Sherman. For such items, CMAR will prepare and submit to GTUA/City of Sherman a detailed listing and written justification as to the need to use the Contingency Fund. GTUA/City of Sherman's approval for such use will not be unreasonably withheld. Approval or concise reasons for disapproval will be provided by GTUA/City of Sherman within 48 hours of receipt of a request.

8.03 It is understood that the entire agreed Contingency Fund is available to CMAR to cover costs incurred in accordance with this Article. Any cost overruns in excess of the agreed Contingency Fund amount in Paragraph 8.01 will be borne by CMAR.

8.04 The parties acknowledge that while the Contingency Fund is a component of the GMP, Owner will maintain a separate Contingency Account in order to distribute amounts to the Contingency Fund. Notwithstanding other provisions off this article, Owner may utilize this Contingency Account at its discretion and as necessary in its allocation of Project funding. As such, it is likely that the Contingency Account, at any given time, may not reflect the actual amount of the Contingency Fund available for use by CMAR under this Article.

8.05 Charges against the Contingency Fund will be tabulated and reported by the CMAR as part of the CMAR's monthly Progress Meeting. CMAR also will provide a tracking system for the measurement and transfer of contingency amounts. Owner will provide a periodic status of the amount in the Contingency Account that is available for the Contingency Fund. Notwithstanding Owner's accounting, the amount reflected in Paragraph 8.01 will be made available to CMAR.

8.06 Only if GTUA/City of Sherman chooses, unused amounts from the initial CMAR Contingency Fund identified in Paragraph 8.01 may be shared, with 60% retained by Owner and 40% to CMAR.

Sherman
BROAD HORIZONS | WWTP CMAR
Kiewit
SOUTH WWTP – MBR PROJECT

Key Dates:

- Notice of Award: 9/26/23
- Amendment 1 (first round of construction funding): 10/18/23
- Mobilization: 10/19/23
- Commence earthwork: 10/23/23
- First Temporary Concrete: 1/5/24
- First Permanent Concrete: 3/4/24
- First Underground Pipe Fusion Weld: 3/18/24

- **Total Personnel Onsite: 181**
  - Onsite Staff: 67
  - Onsite Craft: 78
  - Onsite Subcontractors: 36
- Offsite support (engineering, procurement, estimating, etc.): 100+
- 1276 Purchase Orders made
- 73 of 74 contracts signed (more to come)

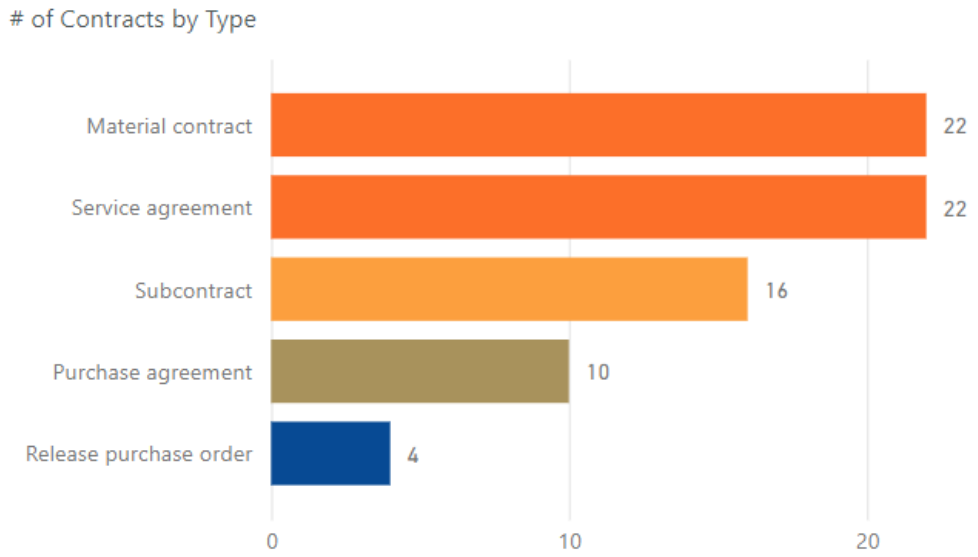

Oct 19, 2023

Dec 1, 2023

Jan 3, 2024

Feb 2, 2024

Mar 1, 2024

Mar 27, 2024

Oct 19, 2023

Mar 27, 2024

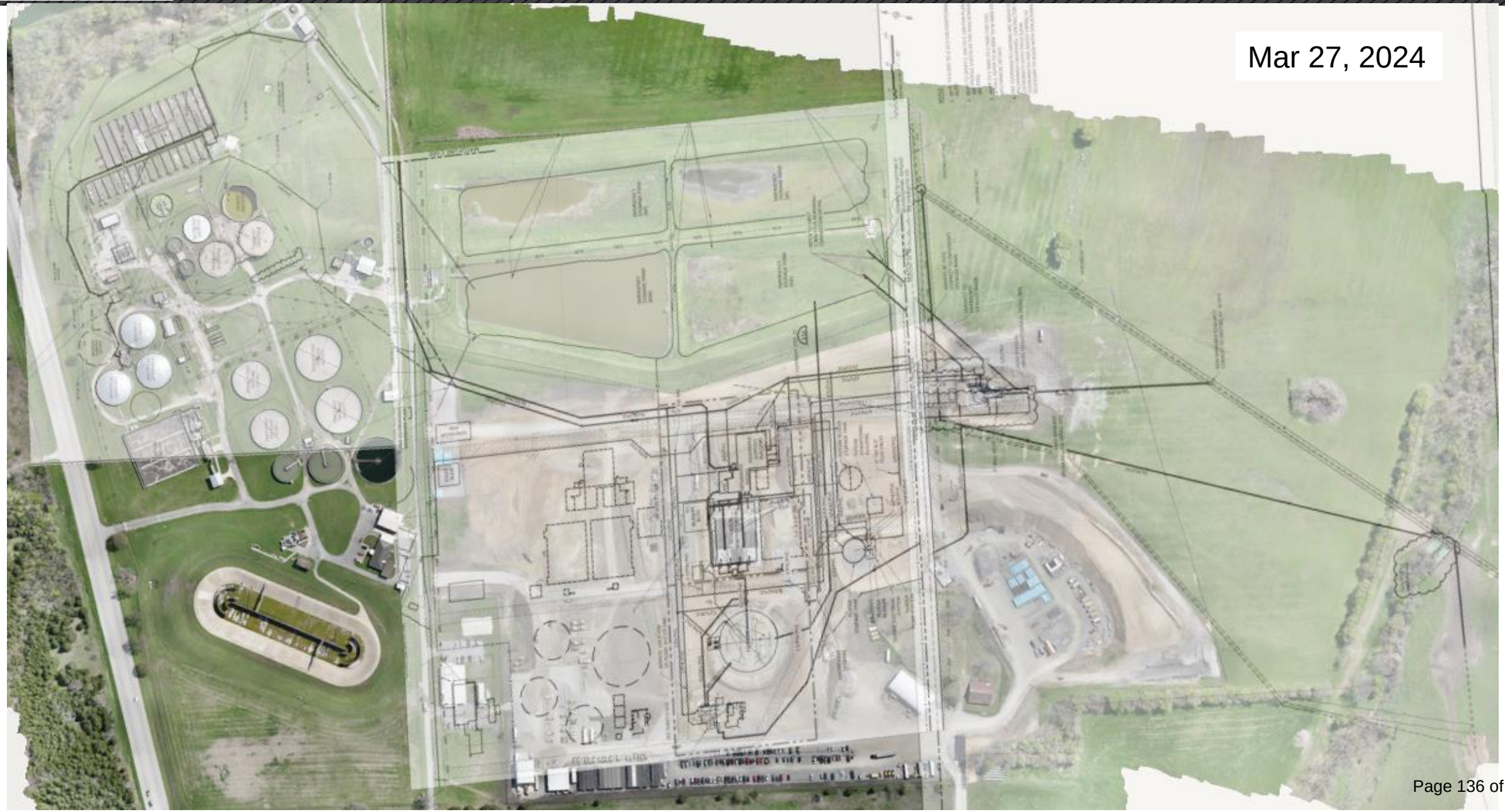
Mar 27, 2024

Status as of 4/3/24:

- Majority of IFCs released
  - MBR IFC release forecast 4/15/24
- Revisions ongoing
  - PTU revisions forecast 4/15/24
- Startup and Commissioning
  - Spec being reviewed
- Site Finishes
  - Being optimized
- Latest Value Engineering Items being implemented

Special Recognition Awards given to: Jeff Rigdon with the City of Sherman and Patrick Moseley with Plummer

North Plant Walk Down

Pre-Construction
Site Photos

Influent Pump Station

Overall status as of 4/3/24:

- Excavation: 110,304 CY of 153,511
- Backfill: 8,694 CY of 49,460

Membrane Basins, Membrane Support Building, and Bioreactor Reactor Basin

Total status as of 4/3/24:

- Concrete: 1,315 CY of 10,824 Cy
- Rebar: 315 tons of 1,261 tons

Biological Reactor Basin

Preliminary Treatment Unit

Rebar Laydown

Underground Pipe at the Sludge Storage Tank

First Underground Pipe at the EQ Basin

UG Pipe Laydowns

Total status as of 4/3/24:

- UG Pipe: 93’ installed out of 25,748’
- AG Pipe: 0’ installed out of 7,446’

Total status as of 4/3/24:

- UG Electrical: excavation and pre-fabrication ongoing for 9,000’ of ductbank

First Ductbank Excavation

Ductbank prefabrication yard

Warehouse

Onsite Offices and Training Facility

Equipment Shop

Parking

SHERMAN CITY COUNCIL
Agenda Communication Form

City Council Regular Meeting Agenda Item No. H.3.

Meeting Date: 4/15/2024

Prepared By: Clint Philpott, Assistant City Manager

Approved By:

Caption:

RESOLUTION NO. 7283

Authorizing Execution of a Development Agreement Between the City of Sherman and AJH Enterprises, Ltd. for Certain Drainage Improvements within an Approximate 96.263-Acres Tract of Land Generally Located at the Corner of U.S. Highway 82 and Rex Cruise Road

Issue:

Historically, this area of town has had drainage challenges. This agreement provides additional detention within the proposed development to help reduce downstream effects. These drainage improvements were part of the Master Flood Study approved in 2013 and will eliminate two city streets from being overtopped during large storm events. The agreement is reimbursing the developer for the additional cost to increase the size of the proposed detention pond. The reimbursement will occur after construction.

Background:

In the Master Floodplain study there were several locations where future detention would reduce downstream flooding. This is one of those locations. With the developer providing the land and a large part of the construction cost, this project's cost benefit ratio became feasible.

Origination:

City Manger's Office

Financial Consideration:

$500,000.00

Staff Recommendation:

Approval

Alternatives:

Attachments:

1. Resolution No. 7283
2. Sherman Detention Pond Agreement

RESOLUTION NO. 7283

A RESOLUTION OF THE CITY COUNCIL OF THE CITY OF SHERMAN, TEXAS, AUTHORIZING EXECUTION OF A DEVELOPMENT AGREEMENT BETWEEN THE CITY OF SHERMAN AND AJH ENTERPRISES, LTD. FOR CERTAIN DRAINAGE IMPROVEMENTS WITHIN AN APPROXIMATE 96.263-ACRES TRACT OF LAND GNERALLY LOCATED AT THE CORNER OF U.S. HIGHWAY 82 AND REX CRUISE ROAD; FINDING AND DETERMINING THAT THE MEETING AT WHICH THIS RESOLUTION IS PASSED WAS NOTICED AND IS OPEN TO THE PUBLIC AS REQUIRED BY LAW.

BE IT RESOLVED BY THE CITY COUNCIL OF THE CITY OF SHERMAN, TEXAS:

SECTION 1. That the City Manager be and is hereby authorized and directed, subject to all contract documents being properly completed and approved as to form and content by the City Attorney, to execute a Development Agreement with AJH Enterprises, LTD for the drainage Improvements in an approximate 93.263 acre tract of land in the J.B. McAnair Survey, Abstract No. 763 in the City of Sherman, Texas, in accordance with all contract documents attached hereto and made a part hereof for all purposes.

SECTION 2. That it is hereby officially found and determined that the meeting at which this resolution is passed is open to the public and that public notice of the time, place, and purpose of said meeting was given as required by law.

DULY PASSED AND APPROVED BY THE CITY COUNCIL OF THE CITY OF SHERMAN, TEXAS on this the 15th day of April 2024.

CITY OF SHERMAN, TEXAS

BY: _____
DAVID PLYLER, MAYOR

ATTEST:

BY: _____
LINDA ASHBY, CITY CLERK

APPROVED AS TO FORM AND CONTENT:
THE LAW FIRM OF ABERNATHY, ROEDER, BOYD & HULLETT, P.C.

BY: _____
RYAN D. PITTMAN, CITY ATTORNEY

NOTICE OF CONFIDENTIALITY RIGHTS: IF YOU ARE A NATURAL PERSON, YOU MAY REMOVE OR STRIKE ANY OR ALL OF THE FOLLOWING INFORMATION FROM ANY INSTRUMENT THAT TRANSFERS AN INTEREST IN REAL PROPERTY BEFORE IT IS FILED FOR RECORD IN THE PUBLIC RECORDS: YOUR SOCIAL SECURITY NUMBER OR YOUR DRIVERS' LICENSE NUMBER.

After Recording Return to:
City of Sherman
City Manager
P. O. Box 1106
Sherman, TX 75091-1106

DEVELOPMENT AGREEMENT BETWEEN AJH ENTERPRISES, LTD. AND THE CITY OF SHERMAN, TEXAS

This DEVELOPMENT AGREEMENT ("Agreement") is entered into by and between the CITY OF SHERMAN, TEXAS, a home-rule municipality ("Sherman"), and AJH ENTERPRISES, LTD., a Texas limited partnership ("Developer"). Sherman and Developer are sometimes referred to collectively as the "parties" or individually as a "party."

WHEREAS, Developer represents and warrants that it is the sole owner of that certain tract of land situated in the City of Sherman, Grayson County, Texas, consisting of 96.263± acres in the J.B. McAnair Survey, Abstract No. 763, as more particularly described in Exhibit A, attached hereto and incorporated herein for all purposes ("Property"); and

WHEREAS, Developer agrees to design and construct, at its sole cost and expense and subject to the Reimbursement (hereinafter defined), the Drainage Improvements (hereinafter defined), including over-sized detention ponds and outlet structures to address stormwater runoff in the area of the Property under the terms and conditions of this Agreement; and

WHEREAS, Developer represents and warrants to Sherman that it has the capacity, ability, expertise, knowledge and experience necessary to design and construct the Drainage Improvements as required by this Agreement; and

WHEREAS, Sherman has investigated and determined that it would be advantageous and beneficial to Sherman and it citizens to enter into this Agreement on the terms and conditions set forth herein.

NOW, THEREFORE, in consideration of the covenants and conditions contained in this Agreement, Sherman and Developer agree as follows:

1. Incorporation of Recitals. The representations, covenants and recitations set forth in the foregoing recitals of this Agreement are true and correct, are incorporated into the body of this Agreement and are adopted as findings of Sherman and the authorized representative of Developer.

2. Land Subject to Agreement. The land that is subject to this Agreement is the Property.

3. Design and Construction of the Developer Improvements.

   (a) Developer, at its sole cost and expense and subject to the Reimbursement, shall

design those certain drainage improvements generally depicted in Exhibit B and consisting of two (2) detention ponds, RCP storm drain pipe, junction boxes, curb inlets and outlet structures (collectively, the "Drainage Improvements"). Developer shall ensure that the design of the Drainage Improvements complies with all applicable ordinances, rules, regulations and requirements of Sherman and other applicable laws (collectively, the "Design Requirements"). Developer represents and warrants that the estimated design and construction costs of the Drainage Improvements are equal to Eight Hundred Fifty Four Thousand Seven Hundred Sixty Six and 00/100 Dollars ($854,766.00) ("Estimated Drainage Improvements Costs"), as more particularly described in the estimated cost analysis set forth in Exhibit C, attached hereto and incorporated herein for all purposes ("Estimated Cost Analysis"). The parties agree that 100 percent of the Estimated Drainage Improvement Costs are attributable to the oversizing of the Drainage Improvements, including but not limited to increased capacity of improvements to anticipate other future development in the area of the Property.

(b) As a condition of Sherman's issuance of any building permits on the Property, Developer shall submit to Sherman the designs, plans and specifications for each of the Drainage Improvements in compliance with this Agreement and the Design Requirements, as each exists at the time Developer submits such designs, plans and specifications (collectively, "Plans"). The general depiction of the Drainage Improvements attached as Exhibit B is for general informational purposes only, and the Approved Plans (hereinafter defined) are not required to be strictly bound by the same. Upon Developer's submission of the Plans, the Plans must be approved, in writing, by Sherman (collectively, "Approved Plans").

(c) Once Sherman issues written approval of the Approved Plans, Developer, at its sole cost and expense and subject to the Reimbursement, shall promptly commence construction of the Drainage Improvements and diligently pursue completion of the same in accordance with the Approved Plans and pursuant to that certain Three-Party Agreement for Public Improvements, the mutually agreed form of which is attached hereto as Exhibit D. Until Developer provides to Sherman a fully executed version of the Three-Party Agreement for Public Improvements acceptable to Sherman, neither Developer nor its contractor or any other person for whom Developer is legally responsible shall be permitted to commence construction of the Drainage Improvements.

(d) All of the Drainage Improvements must be completed and finally accepted by Sherman as provided herein and in accordance with the Approved Plans and any and all applicable ordinances, rules, regulations and requirements, as they exist, may be amended or in the future arising (collectively, "Sherman's Final Acceptance"). Developer must complete all of the Drainage Improvements and obtain Sherman's Final Acceptance of the same before, and as a condition of, Sherman's issuance of the first building permit for development on the Property. The parties agree that time is of the essence of this Agreement.

(e) As a condition to Developer receiving the Reimbursement (hereinafter defined), Developer shall tender to Sherman evidence, in a form acceptable to Sherman, that

all of the design and construction costs of each of the Drainage Improvements have been incurred and paid by Developer, including but not limited to, affidavits of payment/affidavits as to debts and liens and any other evidence reasonably required by Sherman ("Evidence of Payments"). The Evidence of Payments shall reflect Developer's final, actual cost to design and construct the Drainage Improvements ("Actual Drainage Improvements Costs").

4. Reimbursement. Provided that Developer fulfills all of its obligations under this Agreement, including but not limited to, (a) Developer obtaining Sherman's Final Acceptance of the Drainage Improvements,; and (b) Developer receiving from the Sherman City Engineer or his designee written approval of the Actual Drainage Improvements Costs, as evidenced by the subject construction contracts and the Evidence of Payments, Sherman shall participate in a portion of the Actual Drainage Improvements Costs by paying to Developer (the "Reimbursement") an amount equal to the lesser of (i) five hundred thousand and 00/100 dollars ($500,000); (ii) the amount of the Actual Drainage Improvements Costs; or (iii) the amount of the Estimated Drainage Improvements Costs. The Reimbursement shall be due within thirty (30) days of the later of Sherman's issuance of Sherman's Final Acceptance of the final portion of the Drainage Improvements or Sherman's receipt of Developer's written request for such payment. Notwithstanding any statement to the contrary in this Agreement, Sherman agrees to provide, and Developer agrees to accept, the Reimbursement as Sherman's sole financial participation in the costs incurred by Developer in connection with its obligations under this Agreement.

5. Default.

(a) If Developer fails to comply with any provision of this Agreement, and such failure is not cured within thirty (30) days after Sherman sends written notice of such failure to Developer, then Sherman shall have the following remedies, in addition to Sherman's other rights and remedies:

(i) to refuse to accept any portion of any public improvements on the Property or associated with the development of the Property;

(ii) to refuse to issue building permits for any building on the Property;

(iii) to refuse to issue a Certificate of Occupancy for any building on the Property;

(iv) to withhold the payment of all or a portion of the Reimbursement pursuant to Section 5 of this Agreement and/or to nullify Section 5 of this Agreement; and/or

(v) to seek specific performance of this Agreement.

(b) If Sherman fails to comply with the terms and conditions of this Agreement and such failure is not cured within thirty (30) days after Sherman receives written notice of such failure from Developer, then Developer may seek specific performance of this Agreement as its sole and exclusive remedy.

6. Limitation of Liability. Notwithstanding anything to the contrary herein, the parties agree and acknowledge that Sherman shall not, under any circumstance, be required to tender, or be liable to Developer for, any credit or reimbursement of, or payment of any monies, with regard to the matters set forth herein, except as expressly provided in Section 4 of this Agreement. Neither Sherman nor its Council Members, officers, agents, representatives or employees shall be liable or responsible for any loss or damage to persons or property resulting from any act, omission or neglect of Developer or Developer's agents, servants, employees, contractors, customers or invitees or from any defect or failure of any condition or element of the Property or the Drainage Improvements, including the construction thereof. Sherman and its Council Members, officers, agents, representatives and employees shall not be liable or responsible to Developer, its agents, servants, employees, contractors, customers or invitees for any damage to person or property caused by any act, omission or neglect of Developer or Developer's agents, servants, employees, contractors, customers or invitees.

7. Covenant Running with the Land. This Agreement shall be a covenant running with the land and Property and shall be binding upon Developer, and the duties and obligations of Developer under this Agreement shall be binding on Developer and its successors and assigns, including but not limited to each subsequent owner of any portion of the Property. The parties shall cause this Agreement to be filed in the Real Property Records of Grayson County, Texas. Developer represents and warrants that the filing of this Agreement as provided herein shall provide Sherman with a superior and priority encumbrance, lien or interest in, on and to the Property as to any and all other persons or entities. Developer represents and warrants that there are no liens, attachments or other encumbrances that prohibit or affect the rights of Sherman as described herein. If such a condition does exist, however, Developer shall obtain a signature with acknowledgment from the holder of such lien, attachment or encumbrance consenting to the recording of this Agreement.

8. Limitations of Agreement. Sherman ordinances covering property taxes, land use, zoning, utility rates, impact fees, permit fees, inspection fees, tree mitigation fees, development fees, tap fees, pro-rata fees and the like are not affected by this Agreement. Further, this Agreement does not waive or limit any of the obligations of Developer to Sherman under any ordinance, whether now existing or in the future arising.

9. Notices. Any notice provided or permitted to be given under this Agreement must be in writing and may be served by depositing same in the United States Mail, addressed to the party to be notified, postage pre-paid and registered or certified with return receipt requested; by electronic mail, with documentation evidencing the addressee's receipt thereof; or by delivering the same in person to such party a via hand-delivery service, or any courier service that provides a return receipt showing the date of actual delivery of same to the addressee thereof. Notice given in accordance herewith shall be effective upon receipt at the address of the addressee. For purposes of notification, the addresses of the parties shall be as follows:

If to Sherman, addressed to it at:
City of Sherman
Attn: Robby Hefton, City Manager

220 W. Mulberry Street
Sherman, Texas 75090
Telephone: (903) 892-7327
Email: robbyh@cityofsherman.com

With a copy to:
Abernathy, Roeder, Boyd & Hullett, P.C.
Attn: Ryan D. Pittman
1700 Redbud Blvd., Suite 300
McKinney, Texas 75069
Telephone: (214) 544-4000
Email: rpittman@abernathy-law.com

If to Developer, addressed to it at:
AJH Enterprises, LTD.
Attn: Jerome Hill and Farrukh Azim
151 Players Circle
Southlake, TX 76092
Telephone: (817) 312-5901
Email: jerome@crossroadsadv.com
Email: farrukh_azim@hotmail.com

With a copy to:
Palmer Lehman Sandberg, PLLC
Attn: Jeff Sandberg
8350 N. Central Expressway, Suite 1111
Dallas, Texas 75206
Telephone: (214)-242-6454
Email: jsandberg@pamlaw.com

10. Indemnity.

(a) DEVELOPER SHALL RELEASE, DEFEND, INDEMNIFY AND HOLD HARMLESS SHERMAN FROM AND AGAINST ALL DAMAGES, INJURIES (INCLUDING DEATH), CLAIMS, PROPERTY DAMAGES (INCLUDING LOSS OF USE), LOSSES, DEMANDS, SUITS, JUDGMENTS AND COSTS, INCLUDING REASONABLE ATTORNEY'S FEES AND EXPENSES (INCLUDING ATTORNEY'S FEES AND EXPENSES INCURRED IN ENFORCING THIS INDEMNITY) CAUSED, IN WHOLE OR IN PART, BY THE NEGLIGENT, GROSSLY NEGLIGENT OR INTENTIONALLY WRONGFUL ACT OR OMISSION OF DEVELOPER OR ITS OFFICERS, DIRECTORS, PARTNERS CONTRACTORS, SUBCONTRACTORS, EMPLOYEES, REPRESENTATIVES, AGENTS, SUCCESSORS, ASSIGNEES, VENDORS, GRANTEES, TRUSTEES, LICENSEES, INVITEES OR ANY OTHER THIRD PARTY FOR WHOM DEVELOPER IS LEGALLY RESPONSIBLE (COLLECTIVELY, "DEVELOPER" FOR PURPOSES OF THIS SECTION), REGARDLESS OF THE JOINT OR CONCURRENT NEGLIGENCE OF SHERMAN, (I) IN DEVELOPER'S PERFORMANCE OF THIS AGREEMENT; AND/OR (II) ARISING OUT OF GOODS OR SERVICES PROVIDED PURSUANT TO THIS AGREEMENT (COLLECTIVELY, "CLAIMS"). THIS INDEMNIFICATION PROVISION AND THE USE OF THE TERM "CLAIMS" IS ALSO SPECIFICALLY INTENDED TO APPLY TO, BUT

NOT LIMITED TO, ANY AND ALL CLAIMS, WHETHER CIVIL OR CRIMINAL, BROUGHT AGAINST SHERMAN BY ANY GOVERNMENT AUTHORITY OR AGENCY RELATED TO ANY PERSON PROVIDING SERVICES UNDER THIS AGREEMENT THAT ARE BASED ON ANY FEDERAL IMMIGRATION LAW AND ANY AND ALL CLAIMS, DEMANDS, DAMAGES, ACTIONS AND CAUSES OF ACTION OF EVERY KIND AND NATURE, KNOWN AND UNKNOWN, EXISTING OR CLAIMED TO EXIST, RELATING TO OR ARISING OUT OF ANY EMPLOYMENT RELATIONSHIP BETWEEN DEVELOPER AND ITS EMPLOYEES OR SUBCONTRACTORS AS A RESULT OF THAT SUBCONTRACTOR'S OR EMPLOYEE'S EMPLOYMENT OR SEPARATION FROM EMPLOYMENT WITH THE DEVELOPER, INCLUDING BUT NOT LIMITED TO ANY DISCRIMINATION CLAIM BASED ON SEX, SEXUAL ORIENTATION OR PREFERENCE, RACE, RELIGION, COLOR, NATIONAL ORIGIN, AGE OR DISABILITY UNDER FEDERAL, STATE OR LOCAL LAW, RULE OR REGULATION, OR ANY CLAIM FOR WRONGFUL TERMINATION, BACK PAY, FUTURE WAGE LOSS, OVERTIME PAY, EMPLOYEE BENEFITS, INJURY SUBJECT TO RELIEF UNDER THE WORKERS' COMPENSATION ACT OR WOULD BE SUBJECT TO RELIEF UNDER ANY POLICY FOR WORKERS' COMPENSATION INSURANCE AND ANY OTHER CLAIM, WHETHER IN TORT, CONTRACT OR OTHERWISE. DEVELOPER IS EXPRESSLY REQUIRED TO DEFEND SHERMAN AGAINST ALL SUCH CLAIMS.

(b) IN ITS SOLE DISCRETION, SHERMAN SHALL HAVE THE RIGHT TO APPROVE OR SELECT DEFENSE COUNSEL TO BE RETAINED BY DEVELOPER IN FULFILLING ITS OBLIGATION HEREUNDER TO DEFEND AND INDEMNIFY SHERMAN, UNLESS SUCH RIGHT IS EXPRESSLY WAIVED BY SHERMAN IN WRITING. SHERMAN RESERVES THE RIGHT TO PROVIDE A PORTION OR ALL OF ITS OWN DEFENSE; HOWEVER, SHERMAN IS UNDER NO OBLIGATION TO DO SO. ANY SUCH ACTION BY SHERMAN IS NOT TO BE CONSTRUED AS A WAIVER OF DEVELOPER'S OBLIGATION TO DEFEND SHERMAN OR AS A WAIVER OF DEVELOPER'S OBLIGATION TO INDEMNIFY SHERMAN PURSUANT TO THIS AGREEMENT. DEVELOPER SHALL RETAIN SHERMAN-APPROVED DEFENSE COUNSEL WITHIN SEVEN (7) BUSINESS DAYS OF SHERMAN'S WRITTEN NOTICE THAT SHERMAN IS INVOKING ITS RIGHT TO INDEMNIFICATION UNDER THIS AGREEMENT. IF DEVELOPER FAILS TO RETAIN COUNSEL WITHIN SUCH TIME PERIOD, SHERMAN SHALL HAVE THE RIGHT TO RETAIN DEFENSE COUNSEL ON ITS OWN BEHALF, AND DEVELOPER SHALL BE LIABLE FOR ALL COSTS INCURRED BY SHERMAN.

(c) THE RIGHTS AND OBLIGATIONS CREATED BY THIS SECTION SHALL SURVIVE THE TERMINATION OF THIS AGREEMENT.

11. Waiver and Release of Claims for Obligations Imposed by this Agreement.

(a) DEVELOPER ACKNOWLEDGES AND AGREES THAT:

(i) THE CONVEYANCES, DEDICATIONS, EASEMENTS AND/OR PAYMENT OF MONEY REQUIRED BY THIS AGREEMENT TO BE PERFORMED BY DEVELOPER, IN WHOLE OR IN PART, DO NOT CONSTITUTE A:

(A) TAKING UNDER THE TEXAS OR UNITED STATES CONSTITUTION;
(B) VIOLATION OF THE TEXAS WATER CODE, AS IT EXISTS OR MAY BE AMENDED;

(C) NUISANCE; OR

(D) CLAIM FOR DAMAGES OR REIMBURSEMENT AGAINST SHERMAN FOR A VIOLATION OF ANY FEDERAL OR STATE CONSTITUTION, STATUTE OR CASE LAW OR ANY FEDERAL, STATE OR LOCAL ORDINANCE, RULE OR REGULATION.

(ii) THE AMOUNT OF DEVELOPER'S FINANCIAL OR INFRASTRUCTURE CONTRIBUTION OR CONVEYANCE OF REAL PROPERTY OR INTERESTS THEREIN (AFTER RECEIVING ALL CONTRACTUAL OFFSETS, CREDITS AND REIMBURSEMENTS, IF ANY) AGREED TO IN THIS AGREEMENT IS ROUGHLY PROPORTIONAL TO THE DEMAND THAT SUCH DEVELOPER'S DEVELOPMENT PLACES ON SHERMAN'S INFRASTRUCTURE.

(iii) DEVELOPER HEREBY RELEASES SHERMAN FROM ANY OBLIGATION TO PERFORM OR COMMISSION A TAKINGS IMPACT ASSESSMENT UNDER CHAPTER 2007 OF THE TEXAS GOVERNMENT CODE, AS IT EXISTS OR MAY BE AMENDED.

(iv) DEVELOPER HEREBY AGREES THAT ANY PROPERTY WHICH IT CONVEYS TO SHERMAN PURSUANT TO THIS AGREEMENT IS ROUGHLY PROPORTIONAL TO THE BENEFIT RECEIVED BY DEVELOPER FOR SUCH LAND, AND DEVELOPER HEREBY WAIVES ANY CLAIM THEREFORE THAT IT MAY HAVE. DEVELOPER FURTHER ACKNOWLEDGES AND AGREES THAT ALL PREREQUISITES TO SUCH A DETERMINATION OF ROUGH PROPORTIONALITY HAVE BEEN MET, AND THAT ANY VALUE RECEIVED BY SHERMAN RELATIVE TO SAID CONVEYANCE ARE RELATED BOTH IN NATURE AND EXTEND TO THE IMPACT OF THE DEVELOPMENT OF DEVELOPER'S ADJACENT PROPERTY ON SHERMAN'S INFRASTRUCTURE. DEVELOPER AND SHERMAN FURTHER AGREE TO WAIVE AND RELEASE ALL CLAIMS ONE MAY HAVE AGAINST THE OTHER RELATED TO ANY AND ALL ROUGH PROPORTIONALITY AND INDIVIDUAL DETERMINATION REQUIREMENTS MANDATED BY THE UNITED STATES SUPREME COURT IN *DOLAN V. CITY OF TIGARD*, 512 U.S. 374 (1994), AND ITS PROGENY, AS WELL AS ANY OTHER REQUIREMENTS OF A NEXUS BETWEEN DEVELOPMENT CONDITIONS AND THE PROJECTED IMPACT OF THE PUBLIC INFRASTRUCTURE.

(v) DEVELOPER SHALL INDEMNIFY AND HOLD HARMLESS SHERMAN FROM AND AGAINST ANY CLAIMS AND SUITS OF THIRD PARTIES, INCLUDING BUT NOT LIMITED TO, DEVELOPER'S PARTNERS, OFFICERS, DIRECTORS, EMPLOYEES, REPRESENTATIVES, AGENTS, SUCCESSORS, ASSIGNEES, VENDORS, GRANTEES OR TRUSTEES, BROUGHT PURSUANT TO THIS SECTION.

(b) DEVELOPER RELEASES SHERMAN FROM ANY AND ALL CLAIMS OR CAUSES OF ACTION BASED ON EXCESSIVE OR ILLEGAL EXACTIONS.

(c) DEVELOPER WAIVES ANY CLAIM FOR DAMAGES OR REIMBURSEMENT AGAINST SHERMAN FOR A VIOLATION OF ANY FEDERAL OR STATE CONSTITUTION, STATUTE OR CASE LAW OR ANY FEDERAL, STATE OR LOCAL ORDINANCE, RULE OR REGULATION.

(d) THIS SECTION SHALL SURVIVE THE TERMINATION OF THIS AGREEMENT.

12. Vested Rights/Chapter 245 Waiver. This Agreement shall confer no vested rights on the Property, or any portion thereof. Developer acknowledges and agrees that this Agreement does not confer vested rights on the Property and does not provide to Sherman "fair notice" of any "project" as defined in Chapter 245 of the Texas Local Government Code. In addition, nothing contained in this Agreement shall constitute a "permit" or an application for a "permit" as defined in Chapter 245 of the Texas Local Government Code. DEVELOPER HEREBY RELEASES, REMISES, ACQUITS AND FOREVER DISCHARGES CITY AND ITS CITY COUNCIL MEMBERS, OFFICIALS, OFFICERS, AGENTS, EMPLOYEES, ATTORNEYS AND CONTRACTORS, IN EACH OF THEIR INDIVIDUAL, CORPORATE AND GOVERNMENTAL CAPACITIES, FROM ALL CLAIMS, DEMANDS AND CAUSES OF ACTION AND/OR PROPOSED CLAIMS, DEMANDS AND CAUSES OF ACTION WHICH COULD HAVE BEEN ALLEGED RELATING TO OR ARISING OUT OF VESTED RIGHTS UNDER CHAPTER 245 OF THE TEXAS LOCAL GOVERNMENT CODE OR OTHER LAW IN CONNECTION WITH THIS AGREEMENT. THIS SECTION SHALL SURVIVE THE TERMINATION OF THIS AGREEMENT.

13. Condemnation Procedures/Rights Waiver. AS ADDITIONAL CONSIDERATION FOR THE BENEFITS DEVELOPER IS RECEIVING UNDER THIS AGREEMENT, CITY AND ITS CITY COUNCIL MEMBERS, OFFICIALS, OFFICERS, AGENTS, EMPLOYEES, ATTORNEYS AND CONTRACTORS, IN EACH OF THEIR INDIVIDUAL, CORPORATE AND GOVERNMENTAL CAPACITIES, FROM ALL CLAIMS, DEMANDS AND CAUSES OF ACTION AND/OR PROPOSED CLAIMS, DEMANDS AND CAUSES OF ACTION WHICH COULD HAVE BEEN ALLEGED RELATING TO OR ARISING OUT OF CHAPTER 2206 OF THE TEXAS GOVERNMENT CODE, AS AMENDED, AND/OR CHAPTER 21 OF THE TEXAS PROPERTY CODE, AS AMENDED.

14. Warranties/Representations. All warranties, representations and covenants made by one party to the other in this Agreement or in any certificate or other instrument delivered by one party to the other under this Agreement shall be considered to have been relied upon by the other party and will survive the satisfaction of any fees under this Agreement, regardless of any investigation made by either party.

15. Entire Agreement. This Agreement contains the entire agreement of the parties with respect to the matters contained herein and may not be modified or terminated except upon the provisions hereof or by the mutual written agreement of the parties. To the extent of any conflict between the provisions of this Agreement and the exhibits, the provisions of this Agreement shall control.

16. Governing Law; Venue. The laws of the State of Texas shall govern the interpretation, validity, performance and enforcement of this Agreement, without regard to conflict of law principles. This Agreement is performable in Grayson County, Texas, and the exclusive venue for any action arising out of this Agreement shall be a court of appropriate jurisdiction in Grayson County, Texas.

17. Consideration. This Agreement is executed by the parties without coercion or duress and for substantial consideration, the sufficiency of which is forever confessed.

18. Miscellaneous Drafting Provisions. This Agreement shall be deemed drafted equally by all parties hereto. The language of all parts of this Agreement shall be construed as a whole

according to its fair meaning, and any presumption or principle that the language herein is to be construed against any party shall not apply. Headings in this Agreement are for the convenience of the parties and are not intended to be used in construing this document.

19. Authority to Execute. The individuals executing this Agreement on behalf of the respective parties below represent to each other and to others that all appropriate and necessary action has been taken to authorize the individual who is executing this Agreement to do so for and on behalf of the party for which his or her signature appears, that there are no other parties or entities required to execute this Agreement in order for the same to be an authorized and binding agreement on the party for whom the individual is signing this Agreement and that each individual affixing his or her signature hereto is authorized to do so, and such authorization is valid and effective on the Effective Date (hereinafter defined).

20. Savings; Severability. In the event that a term, condition or provision of this Agreement is determined to be invalid, illegal, void, unenforceable or unlawful by a court of competent jurisdiction, then that term, condition or provision shall be deleted and the remainder of the Agreement shall remain in full force and effect as if such invalid, illegal, void, unenforceable or unlawful provision had never been contained in this Agreement.

21. Representations. Each party represents that it has carefully read this Agreement, knows the contents hereof, has consulted with an attorney of its choice regarding the meaning and effect hereof and is signing the same solely of its own judgment.

22. No Third Party Beneficiaries. Nothing in this Agreement shall be construed to create any right in any third party not a signatory to this Agreement, and the parties do not intend to create any third party beneficiaries by entering into this Agreement.

23. Assignment/Binding Effect.

(a) This Agreement is assignable, in whole or in part, upon the following conditions, all of which must be satisfied before any such assignment shall be valid and enforceable:

(i) the assignment of the Agreement must be evidenced by a recordable document ("Assignment"), the form of which must be approved in writing by Sherman;

(ii) the Assignment must expressly contain, among any other reasonable requirements and conditions of Sherman, an acknowledgment and agreement that all obligations, covenants and conditions contained in this Agreement will be assumed solely and completely by the assignee, and the contact name, address, phone number, fax number and electronic mail address of the assignee;

(iii) Developer will file any approved, executed Assignment in the Real Property Records of Grayson County, Texas; and

(iv) Developer shall provide Sherman with a file-marked copy of the Assignment within ten (10) days of filing the same, and until Sherman receives said file-marked copy of the Assignment as provided herein, Sherman shall not, under any circumstance, recognize said Assignment.

(b) This Agreement shall be binding upon and inure to the benefit of Sherman and Developer.

(c) This Assignment provision shall in no way modify, alter, amend, reduce or waive the provision above titled "Covenant Running with the Land" or its effectiveness. In the event there is a conflict between this Assignment provision and the Covenant Running with the Land provision, the Covenant Running with the Land provision shall control and govern

24. Indemnification. The Parties agree that the Indemnity provisions set forth in this Agreement are conspicuous, and the parties have read and understood the same.

25. Waiver. Waiver by either party of any breach of this Agreement, or the failure of either party to enforce any of the provisions of this Agreement, at any time, shall not in any way affect, limit or waive such party's right thereafter to enforce and compel strict compliance.

26. Immunity. It is expressly understood and agreed that, in the execution and performance of this Agreement, Sherman has not waived, nor shall be deemed hereby to have waived, any defense or immunity, including governmental, sovereign and official immunity, that would otherwise be available to it against claims arising in the exercise of governmental powers and functions. By entering into this Agreement, the parties do not create any obligations, express or implied, other than those set forth herein. Notwithstanding any contrary language in this Agreement, Develop and Sherman agree that this Agreement is a "Contract subject to this subchapter" as set forth in Chapter 271, Subchapter I of the Texas Local Government Code.

27. Reference to Developer. When referring to "Developer" herein, this Agreement shall refer to and be binding upon Developer, and its officers, directors, partners, employees, representatives, contractors, agents, successors, assignees (as authorized herein), vendors, grantees, trustees, legal representatives and any other third parties for whom Developer is legally responsible.

29. Reference to Sherman. When referring to "Sherman" herein, this Agreement shall refer to and be binding upon Sherman and Sherman's Council Members, officers, agents, representatives, employees and any other authorized third parties for whom Sherman is legally responsible.

30. Multiple Counterparts. This Agreement may be executed in a number of identical counterparts, each of which shall be deemed an original for all purposes. An electronic mail or facsimile signature will also be deemed to constitute an original if properly executed and delivered to the other party.

IN WITNESS WHEREOF, the parties have executed this Agreement and caused this Agreement to be effective when all the parties have signed it. The date this Agreement is signed by the last party to sign it (as indicated by the date associated with that party's signature below) will be deemed the effective date of this Agreement ("Effective Date").

CITY OF SHERMAN, TEXAS,
a home-rule municipality

By: _____
Robby Hefton, City Manager
Date executed: _____

ATTEST:

By: _____
Linda Ashby, City Clerk

APPROVED AS TO FORM:
Abernathy, Roeder, Boyd & Hullett, P.C.

By: _____
Ryan D. Pittman, City Attorneys

STATE OF TEXAS §
§
COUNTY OF GRAYSON §

BEFORE ME, the undersigned authority, on this day personally appeared **Robby Hefton**, known to me to be one of the persons whose names are subscribed to the foregoing instrument; he acknowledged to me that he is the City Manager and duly authorized representative for the **City of Sherman, Texas**, and that he executed said instrument for the purposes and consideration therein expressed.

GIVEN UNDER MY HAND AND SEAL OF OFFICE this _____ day of _____, 2024.

_____
Notary Public, State of Texas
My Commission Expires:_____

AJH ENTERPRISES, LTD.,
a Texas limited partnership

By: _____
Printed Name: Jerome Hill
Title: Manager
Date executed: 3/28/2024

STATE OF TEXAS §
§
COUNTY OF Tarrant §

BEFORE ME, the undersigned authority, on this day personally appeared Jerome Hill, known to me to be one of the persons whose names are subscribed to the foregoing instrument; he acknowledged to me that he is the duly authorized representative of AJH Enterprises, LTD, a Texas Limited Partnership, and that he executed said instrument for the purposes and consideration therein expressed and in the capacity therein stated.

GIVEN UNDER MY HAND AND SEAL OF OFFICE this 28th day of March, 2024.

_____
Notary Public, State of Texas
My Commission Expires: 11/02/2025

KAYLEN PIZZINI
Notary ID #131338195
My Commission Expires
November 2, 2025

Exhibit A
Legal Description of the Property

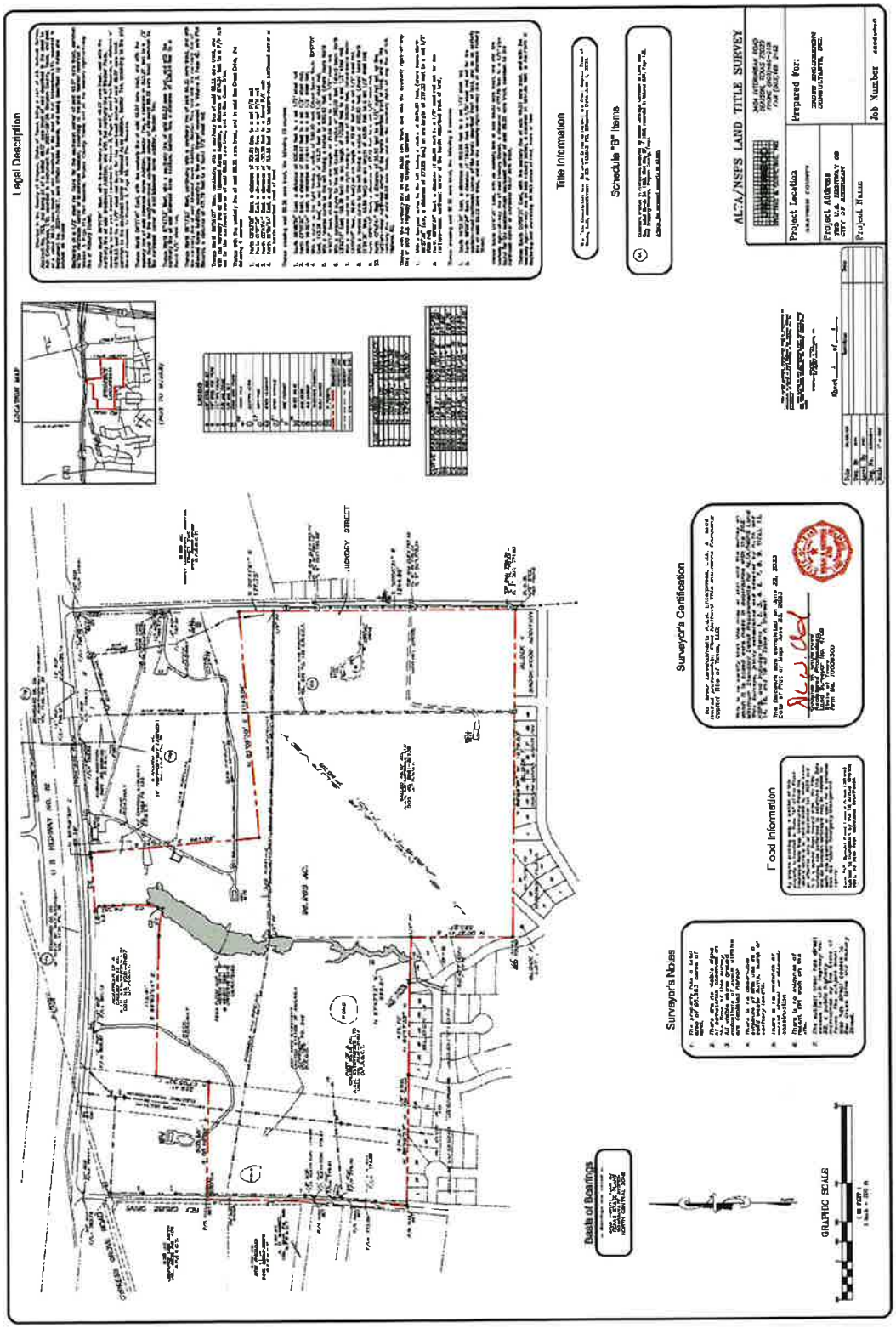

Exhibit B
General Depiction and Description of the Drainage Improvements

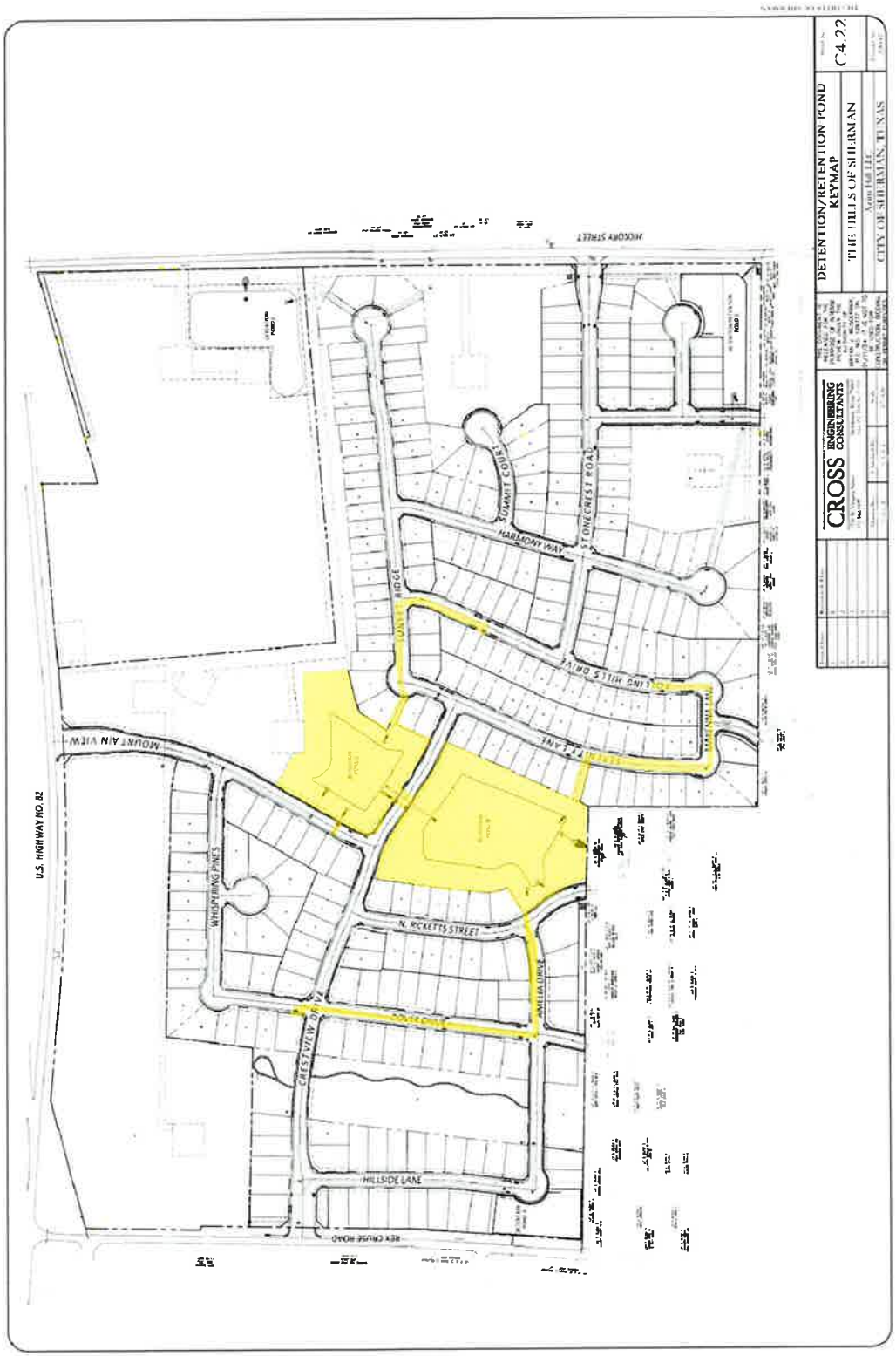

Exhibit C
Estimated Cost Analysis

The Hills of Sherman

Project: The Hills of Sherman

Date: 12/6/2023
Revision
Created By: KK
Checked By: BW

SD B & Laterals

DESCRIPTION	QUANTITY	UNIT	COST / UNIT	TOTAL COST
18" RCP	501	LF	$70.00	$35,067.90
21" RCP	432	LF	$80.00	$34,589.60
24" RCP	770	LF	$90.00	$69,325.20
27" RCP	455	LF	$100.00	$45,483.00
42" RCP	585	LF	$160.00	$93,580.80
27" Sloped End Headwall	1	EA	$3,800.00	$3,800.00
42" Sloped End Headwall	1	EA	$4,300.00	$4,300.00
10' Curb Inlet	18	EA	$6,500.00	$117,000.00
20' Curb Inlet	1	EA	$13,000.00	$13,000.00
8"-12" Rip-Rap	26	SY	$126.00	$3,276.00
4'x4' Junction Box	5	EA	$6,750.00	$33,750.00
5'x5' Junction Box	1	EA	$7,500.00	$7,500.00
Trench Safety	2,743	LF	$2.00	$5,486.66
				$466,159.16

SD C & Laterals

DESCRIPTION	QUANTITY	UNIT	COST / UNIT	TOTAL COST
18" RCP	76	LF	$70.00	$5,285.00
21" RCP	54	LF	$80.00	$4,300.00
24" RCP	612	LF	$90.00	$55,122.30
27" RCP	144	LF	$100.00	$14,373.00
30" RCP	196	LF	$110.00	$21,562.20
36" RCP	164	LF	$134.00	$21,976.00
6'x3' RCB	42	LF	$425.00	$17,850.00
18" Sloped End Headwall	1	EA	$2,500.00	$2,500.00
24" Sloped End Headwall	1	EA	$3,000.00	$3,000.00
30" Sloped End Headwall	1	EA	$4,000.00	$4,000.00
10' Curb Inlet	8	EA	$6,500.00	$52,000.00
8"-12" Rip-Rap	39	SY	$126.00	$4,914.00
4'x4' Junction Box	2	EA	$6,750.00	$13,500.00
6'x6' Modified Outfall Structure	1	EA	$15,000.00	$15,000.00
12'x6' Outfall Structure (CIP)	1	EA	$30,000.00	$30,000.00
Trench Safety	1,081	LF	$2.00	$2,162.94
				$267,545.44

TOTAL COST	$733,704.60

PRELIMINARY OPINION OF PROBABLE CONSTRUCTION COST

Project: The Hills of Sherman

Revised: 12/6/2023

SUMMARY OF COSTS

DESCRIPTION	TOTAL COST
STORM DRAIN	$733,705
Bond (3% of Hard Cost)	$22,011
Inspection (3.5%)	$25,680
Contingency (10%)	$73,370
Total Construction Cost	$854,766

Notes:

1. No easement acquisition costs are included in this estimate.
2. Since Cross Engineering Consultants, Inc. has no control over the cost of labor, materials, equipment, or services furnished by others, or over methods of determining price, or over competitive bidding or market conditions, any and all opinions as to the cost herein, including but not limited to opinions as to the costs of construction materials, shall be made on the basis of experience and best available data. Cross Engineering Consultants, Inc. cannot and does not guarantee that proposals, bids, or actual costs will not vary from the opinions on costs shown herein.

Exhibit D

Agreed Form of Three-Party Agreement for Public Improvements

Sherman
CLASSIC TOWN. BROAD HORIZON.

Construction of Public Infrastructure in Public Rights-Of-Way or Easements
(Drainage, Pavement, Sanitary Sewer, Water and/or Other Public Facilities)

CHECKLIST of items required for release of plans and issuance of notice to proceed. (See Item 7.)

Submitted	N/A	
_____	_____	Four (4) originals of the Contract, Bonds, Insurance Certificates and Acknowledgement Form (See instructions below.)
_____	_____	Three (3) to scale half size copies of approved construction plans, sealed by a Professional Engineer.
_____	_____	Plat has been approved by P&Z and City Council.
_____	_____	All necessary off-site easements executed and submitted per instructions.
_____	_____	Copy of SWPPP (booklet) and NOI as sent to TCEQ (or Site Notice) as applicable.
_____	_____	Copy of construction material submittals.
_____	_____	List of proposed subcontractors and emergency contact phone numbers.
_____	_____	Construction plans in pdf format (by Engineer).
_____	_____	Review, Testing and Inspection Fee (Paid)

INSTRUCTIONS FOR EXECUTION AND SUBMITTAL OF CONTRACT AND BONDS

1. Owner and Contractor must sign "**Three-Party Agreement**" and provide four (4) originals of documents.

2. Attach **Schedule of Values** (bid item costs) as **Exhibit "A"**. Do not use "lump sum" prices unless approved by City Engineer in writing in advance. Do not include any private facilities or private improvements in the Schedule of Values. The City Engineer or his designee must approve the Schedule of Values prior to submission of the completed Three-Party Agreement.

3. Bonds:
   - Execute **Performance Bond** and **Payment Bond** in the amount of One Hundred Percent (100%) of the value of the work (public infrastructure) to be performed.
   - Execute the **Maintenance Bond** in the amount of One Hundred Percent (100%) of the value of the work (public infrastructure) to be performed for a term of two (2) years from the date of acceptance of the work. (Note that the date of the Maintenance Bond must not be earlier than the date of the Contract.)
   - Power of Attorney will need to have an appointment with the surety company listed with the Texas Department of Insurance.

4. Provide a **Certificate of Insurance and All Applicable Endorsements,** in accordance, showing coverage with liability limits. The minimum limits are as specified below:
   a. Workers' Compensation/Employer's Liability: Providing for payment of benefits as specified by the Workers' Compensation Laws of the State of Texas.
   b. Contractor's Public Liability
      (1) Bodily Injury: $1,000,000 each person
      $1,000,000 each accident
      (2) Property Damage: $1,000,000 each accident
   c. See item # 10 of the agreement for insurance requirements.

5. Sign **Acknowledgement** related to the payment of inspection fees and testing costs prior to acceptance of public improvements by the City.

6. Submit four (4) sets of documents as above, each with original signatures. The order of each set should be:
   - Checklist
   - Contract
   - Exhibit "A" - Schedule of Values
   - Performance Bond, Payment Bond, Maintenance Bond; power of attorney must be submitted for all bonds
   - Certificate of Insurance and Endorsements and Contractor's Certification of Workers' Compensation
   - Acknowledgement Form
7. Beginning Construction: The written release of approved construction plans to the field via the City's Engineering Inspector constitutes **Notice to Proceed (NTP).**
8. If you have any questions, please call 903-892-7208.

City of Sherman
Private Contract No._____

THREE-PARTY AGREEMENT FOR PUBLIC IMPROVEMENTS

This THREE-PARTY AGREEMENT FOR PUBLIC IMPROVEMENTS is made and entered into by and between _____ ("OWNER") and _____ ("CONTRACTOR"). OWNER and CONTRACTOR are each referred to herein as a "party" or collectively as the "parties."

1. CONTRACTOR hereby agrees to furnish all labor, materials, tools, and the necessary equipment for the construction and installation ("work") of the following:

_____

_____

_____

See Exhibit "A" – Schedule of Values and scope of work (collectively, "Public Improvements").

2. The construction and installation of the Public Improvements shall be performed according to the plans prepared by _____ (engineering firm), titled _____ (name of project), dated _____, and the current ordinances, standards, specifications, details and other requirements relating to the design and construction of public improvements (collectively, "Sherman Construction Standards") adopted or issued by the City of Sherman ("CITY"), including the City Engineer and his designee (which are on file in the CITY Engineering Department), and the current edition of the Standard Specifications for Public Works Construction published by the North Central Texas Council of Governments. In the event of a conflict between the Sherman Construction Standards and the NCTCOG Standard Specifications, the Sherman Construction Standards and the NCTCOG Standard Specifications shall govern in that order. The parties agree that the Public Improvements construction, installation and the locations thereof shall be inspected and accepted by the City Engineer or his designee.

3. Inasmuch as the Public Improvements are proposed for dedication to the CITY, it is agreed by and between the parties that the CITY has an interest in the proper performance of this Agreement and any other contract relating to or arising out of the work, and that the CITY may bring suit for failure to comply with the terms of this Agreement and/or any such other contract, as a third-party beneficiary thereof. Although the Public Improvements may be accepted by the City Engineer, the CITY may recover damages and seek other remedies against the parties and/or upon the bonds if it is discovered that the Public Improvements were not built or completed in accordance with the terms of this Agreement.

4. It is agreed between the parties that a Performance Bond in the amount of one hundred percent (100%) of the contract price for work on the Public Improvements shall be furnished by the CONTRACTOR in favor of the CITY and shall be executed by a reputable and solvent surety company authorized to do business in the State of Texas and in the form required by the City Engineer. The Performance Bond shall indemnify the CITY for the completion of the Project in accordance with the terms of this Agreement. The Performance Bond shall be approved by the City Engineer or his designee prior to CONTRACTOR beginning work on the Public Improvements.

5. It is agreed between the parties that a Payment Bond in the amount of one hundred percent (100%) of the contract price for work on the Public Improvements shall be furnished by the CONTRACTOR in favor of the CITY and shall be executed by a reputable and solvent surety company authorized to do business in the State of Texas and in the form required by the City Engineer. The Payment Bond shall indemnify the CITY against any claims of nonpayment by all persons, firms, corporations and other entities who may furnish

materials or perform labor in connection with the work. The Payment Bond shall be approved by the City Engineer or his designee prior to CONTRACTOR beginning work on the Public Improvements

6. It is agreed between the parties that a Maintenance Bond in the amount of one hundred percent (100%) of the contract price for work on the Public Improvements shall be furnished by the CONTRACTOR in favor of the CITY and shall be executed by a reputable and solvent surety company authorized to do business in the State of Texas and in the form required by the City Engineer. The Maintenance Bond ensure the repair or remedy of any maintenance issues the CITY may have regarding the Public Improvements after the CITY accepts the same. The Maintenance Bond shall be approved by the City Engineer or his designee prior to CONTRACTOR beginning work on the Public Improvements

7. OWNER hereby agrees to pay CONTRACTOR for the work on the Public Improvements performed hereunder on the following basis:

See Exhibit "A" – Schedule of Values for unit prices and total value of work.

8. Each of the parties hereto has been furnished a copy of the plans referenced above. The project plans have been reviewed and accepted by the City Engineer or his designee.

9. EACH OF CONTRACTOR AND OWNER HEREBY RELEASES AND SHALL DEFEND, INDEMNIFY AND HOLD HARMLESS CITY AND ITS CITY COUNCIL MEMBERS, OFFICERS, AGENTS, REPRESENTATIVES AND EMPLOYEES (COLLECTIVELY REFERRED TO AS "CITY" FOR PURPOSES OF THIS SECTION) FROM AND AGAINST ALL DAMAGES, INJURIES (WHETHER IN CONTRACT OR IN TORT, INCLUDING PERSONAL INJURY AND DEATH), CLAIMS, PROPERTY DAMAGES (INCLUDING LOSS OF USE), LOSSES, DEMANDS, SUITS, ACTIONS, JUDGMENTS, LIENS, COSTS AND EXPENSES, INCLUDING REASONABLE ATTORNEY'S FEES AND EXPENSES (INCLUDING ATTORNEY'S FEES AND EXPENSES INCURRED IN ENFORCING THIS SECTION), THAT IN WHOLE OR IN PART ARISE OUT OF OR ARE CONNECTED WITH PERFORMANCE UNDER THIS AGREEMENT AND/OR THE PUBLIC IMPROVEMENTS AND/OR THE WORK AND/OR THE GOODS AND/OR SERVICES PROVIDED BY CONTRACTOR, ITS OFFICERS, AGENTS, REPRESENTATIVES, EMPLOYEES, SUBCONTRACTORS, LICENSEES, INVITEES OR ANY OTHER THIRD PARTIES FOR WHOM CONTRACTOR OR OWNER IS LEGALLY RESPONSIBLE (COLLECTIVELY REFERRED TO AS "CONTRACTOR" FOR PURPOSES OF THIS SECTION) PURSUANT TO THIS AGREEMENT AND/OR THE NEGLIGENT, GROSSLY NEGLIGENT AND/OR INTENTIONAL WRONGFUL ACT AND/OR OMISSION OF CONTRACTOR IN ITS/THEIR PERFORMANCE OF THIS AGREEMENT, REGARDLESS OF THE JOINT OR CONCURRENT NEGLIGENCE OF CITY (COLLECTIVELY, "CLAIMS"). THIS INDEMNIFICATION PROVISION AND THE USE OF THE TERM "CLAIMS" IS ALSO SPECIFICALLY INTENDED TO APPLY TO, BUT IS NOT LIMITED TO, ANY AND ALL CLAIMS, WHETHER CIVIL OR CRIMINAL, BROUGHT AGAINST CITY BY ANY GOVERNMENT AUTHORITY OR AGENCY RELATED TO ANY PERSON PROVIDING SERVICES UNDER THIS AGREEMENT THAT ARE BASED ON ANY FEDERAL IMMIGRATION LAW AND ANY AND ALL CLAIMS, DEMANDS, DAMAGES, ACTIONS AND CAUSES OF ACTION OF EVERY KIND AND NATURE, KNOWN AND UNKNOWN, EXISTING OR CLAIMED TO EXIST, RELATING TO OR ARISING OUT OF ANY EMPLOYMENT RELATIONSHIP BETWEEN CONTRACTOR AND ITS EMPLOYEES OR SUBCONTRACTORS AS A RESULT OF THAT SUBCONTRACTOR'S OR EMPLOYEE'S EMPLOYMENT AND/OR SEPARATION FROM EMPLOYMENT WITH CONTRACTOR, INCLUDING BUT NOT LIMITED TO ANY DISCRIMINATION CLAIM BASED ON SEX, SEXUAL ORIENTATION OR PREFERENCE, RACE, RELIGION, COLOR, NATIONAL ORIGIN, AGE OR DISABILITY UNDER FEDERAL, STATE OR LOCAL LAW, RULE OR REGULATION, AND/OR ANY CLAIM FOR WRONGFUL TERMINATION, BACK PAY, FUTURE WAGE LOSS, OVERTIME PAY, EMPLOYEE BENEFITS, INJURY SUBJECT TO RELIEF UNDER THE WORKERS' COMPENSATION ACT OR WOULD BE SUBJECT TO RELIEF UNDER ANY POLICY FOR WORKERS COMPENSATION INSURANCE, AND ANY OTHER CLAIM, WHETHER IN TORT, CONTRACT OR OTHERWISE.

IN ITS SOLE DISCRETION, CITY SHALL HAVE THE RIGHT TO APPROVE OR SELECT DEFENSE COUNSEL TO BE RETAINED BY CONTRACTOR IN FULFILLING ITS OBLIGATION HEREUNDER TO DEFEND AND INDEMNIFY CITY, UNLESS SUCH RIGHT IS EXPRESSLY WAIVED BY CITY IN WRITING. CITY RESERVES THE RIGHT TO PROVIDE A

PORTION OR ALL OF ITS OWN DEFENSE; HOWEVER, CITY IS UNDER NO OBLIGATION TO DO SO. ANY SUCH ACTION BY CITY IS NOT TO BE CONSTRUED AS A WAIVER OF CONTRACTOR'S OBLIGATION TO DEFEND CITY OR AS A WAIVER OF CONTRACTOR'S OBLIGATION TO INDEMNIFY CITY PURSUANT TO THIS AGREEMENT. CONTRACTOR SHALL RETAIN CITY-APPROVED DEFENSE COUNSEL WITHIN SEVEN (7) BUSINESS DAYS OF CITY'S WRITTEN NOTICE THAT CITY IS INVOKING ITS RIGHT TO DEFENSE OR INDEMNIFICATION UNDER THIS AGREEMENT. IF CONTRACTOR FAILS TO RETAIN COUNSEL WITHIN SUCH TIME PERIOD, CITY SHALL HAVE THE RIGHT TO RETAIN DEFENSE COUNSEL ON ITS OWN BEHALF, AND CONTRACTOR SHALL BE LIABLE FOR ALL COSTS INCURRED BY CITY.

THE RIGHTS AND OBLIGATIONS CREATED BY THIS SECTION SHALL SURVIVE TERMINATION OF THIS AGREEMENT.

10. CONTRACTOR shall not start work under this Agreement until CONTRACTOR has obtained, at CONTRACTOR's expense, all of the insurance specified in, and required by, this Section, nor shall CONTRACTOR allow any subcontractor to commence work on its subcontract until similar insurance has been obtained by the subcontractor. CONTRACTOR shall procure and keep in full force and effect the types and amounts of insurance specified herein for and during all aspects and phases of CONTRACTOR's work at no expense to CITY. All policies shall name the CITY, its officers, agents, representatives and employees as additional insureds as to all applicable coverages with the exception of workers compensation insurance and professional liability insurance (if applicable). Such policies shall require the provision of written notice to CITY at least thirty (30) days prior to cancellation, non-renewal or material modification of any policies, evidenced by return receipt or United States Certified Mail. General Liability Insurance shall provide for a Waiver of Subrogation against Sherman for injuries, including death, property damage, or any other loss to the extent that same is covered by the proceeds of the insurance. All insurance policies that are required to name Sherman as an additional insured must be endorsed to read as primary and non-contributory coverage regardless of the application of other insurance. All insurance companies providing the required insurance shall be authorized to transact business in the State of Texas, and shall have a minimum rating of "A-" by A.M. Best's Key Rating Guide, or other equivalent rating service(s). A Certificate of Insurance and all applicable endorsement(s) evidencing the required insurance shall be submitted prior to commencing work on the Project.

General Liability insurance for personal injury (including death) and property damage	$1 Million per occurrence $2 Million aggregate
Statutory Worker's compensation insurance Employers Liability insurance	as required by state law $1 Million bodily injury per accident $1 Million bodily injury by disease-policy limit $1 Million bodily injury by disease-each employee
Hired and Non-Owned Auto Liability insurance covering hired and non-owned autos	$1 Million per occurrence
Umbrella / Excess Liability insurance	$2 Million per occurrence (Projects less than $100,000)
Umbrella Liability insurance only	$2 Million per occurrence (Projects more than $100,000)

11. This Agreement shall bind the parties, their heirs, successors, assigns and representatives for the full and faithful performance of the terms hereof, jointly and severally.

12. In the event that a term, condition or provision of this Agreement is determined to be invalid, illegal, void, unenforceable or unlawful by a court of competent jurisdiction, then that term, condition or provision shall be deleted and the remainder of the Agreement shall remain in full force and effect as if such invalid, illegal, void, unenforceable or unlawful provision had never been included in this Agreement.

13. It is understood and agreed that the Public Improvements, all work and all installations of whatever kind made under the terms of this Agreement shall, upon the written acceptance thereof by the City Engineer or his designee, immediately become the property of the CITY, subject only to such reimbursement to the OWNER as provided by the ordinances of the CITY or by separate written agreement.

IN WITNESS WHEREOF, the parties have executed this Agreement and caused this Agreement to be effective when all the parties have signed it. The date this Agreement is signed by the last party to sign it (as indicated by the date associated with that party's signature below) will be deemed the effective date of this Agreement ("Effective Date").

Signature of Contractor's Representative	Signature of Owner's Representative
Print Name/Title of Contractor's Representative	Print Name/Title of Owner's Representative
Name of Contractor (company)	Name of Owner (company)
Address	Address
City, State, Zip	City, State, Zip
Area Code - Telephone Number	Area Code - Telephone Number

STATE OF TEXAS §
§
COUNTY OF _____ §

BEFORE ME, the undersigned authority, on this day personally appeared _____, known to me to be one of the persons whose names are subscribed to the foregoing instrument; he/she acknowledged to me that he/she is the duly authorized representative and agent of **OWNER**, and that he/she executed the same for the purposes and consideration therein stated and in the capacity therein stated.

IN WITNESS WHEREOF, I have hereunto set my hand and seal of office
this _____day of _____, 20_____.

_____
Notary Public, State of Texas
My Commission Expires:_____

STATE OF TEXAS §
§
COUNTY OF _____ §

BEFORE ME, the undersigned authority, on this day personally appeared _____, known to me to be one of the persons whose names are subscribed to the foregoing instrument; he/she acknowledged to me that he/she is the duly authorized representative and agent of **CONTRACTOR**, and that he/she executed the same for the purposes and consideration therein stated and in the capacity therein stated.

IN WITNESS WHEREOF, I have hereunto set my hand and seal of office this _____day of _____, 20____.

_____
Notary Public, State of Texas
My Commission Expires:_____

RECEIVED AND APPROVED AS TO FORM:

_____
Engineer, City of Sherman

Attachments: Exhibit "A"- Schedule of Values, Performance, Payment, and Maintenance Bonds, Certificate of Insurance/Endorsements, Contractor's Certification of Workers' Compensation, Acknowledgement Form

PERFORMANCE BOND

BOND NO._____

STATE OF TEXAS §
§ KNOW ALL PERSONS BY THESE PRESENTS:
COUNTY OF Grayson §

THAT _____
(Name of Contractor) of _____ (City) _____ County, State of _____, as PRINCIPAL and _____
(Name of Surety) as SURETY, authorized under the laws of the State of Texas to act as surety on bonds for principals, are held and firmly bound unto the City of Sherman (CITY), in the penal sum of:
_____ and ____/100 Dollars ($_____) for the payment whereof, the said PRINCIPAL and SURETY bind themselves, and their heirs, administrators, executors, successors, and assigns, jointly and severally, by these presents:

WHEREAS, the PRINCIPAL has entered into a certain written contract with the CITY, for _____ (Name of Project) which contract is hereby referred to and made part hereof as fully and to the same extent as if copied at length herein.

NOW THEREFORE, THE CONDITION OF THIS OBLIGATION IS SUCH, that if the said PRINCIPAL shall faithfully perform the said contract and shall in all respects duly and faithfully observe and perform all and singular the covenants, conditions and agreements in and by said contract agreed and covenanted by the PRINCIPAL to be observed and performed, and according to the true intent and meaning of said contract and the Plans and Specifications hereto annexed, then this obligation shall be void; otherwise to remain in full force and effect:

"PROVIDED, HOWEVER, that this bond is executed pursuant to the provisions of Chapter 2253 of the Texas Government Code for Public Works as amended and all liabilities on this bond shall be determined in accordance with the provisions of said Chapter to the same extent as if it were copied at length herein."

SURETY, for value received, stipulates and agrees that no change, extension of time, alteration or addition to the terms of the contract, or to the work performed thereunder, or the plans, specifications, or drawings accompanying the same, shall in any way affect its obligation on this bonds, and it does hereby waive notice of any such change, extension of time, alteration or addition to the terms of the contract, or to the work to be performed thereunder.

IN WITNESS WHEREOF, the said PRINCIPAL and SURETY have signed and sealed this instrument this _____day of _____ 20_____.

PRINCIPAL:	SURETY:
_____	_____
Name of Contractor	Name of Surety
_____	_____
Signature	Signature
_____	_____
Printed Name and Title	Printed Name and Title
_____	_____
Address	Address
_____	_____
City, State, Zip	City, State, Zip

The name, address and phone number of the Resident Agent of Surety is:

_____

_____

PAYMENT BOND

BOND NO._____

STATE OF TEXAS §

§ KNOW ALL PERSONS BY THESE PRESENTS:

COUNTY OF Grayson §

THAT _____
(Name of Contractor) of _____ (City) _____ County, State of _____, as PRINCIPAL and _____
(Name of Surety) as SURETY, authorized under the laws of the State of Texas to act as surety on bonds for principals, are held and firmly bound unto the City of Sherman (CITY), in the penal sum of:

_____ and ____/100 Dollars ($_____) for the payment whereof, the said PRINCIPAL and SURETY bind themselves, and their heirs, administrators, executors, successors, and assigns, jointly and severally, by these presents:

WHEREAS, the PRINCIPAL has entered into a certain written contract with the CITY, for _____ (Name of Project) which contract is hereby referred to and made part hereof as fully and to the same extent as if copied at length herein.

NOW, THEREFORE, THE CONDITION OF THIS OBLIGATION IS SUCH, that if the said PRINCIPAL shall pay all claimants supplying labor and material to him or a subcontractor in the prosecution of the work provided for in said contract, then this obligation shall be void; otherwise to remain in full force and effect:

"PROVIDED, HOWEVER, that this bond is executed pursuant to the provisions of Chapter 2253 of the Texas Government Code for Public Works as amended and all liabilities on this bond shall be determined in accordance with the provisions of said Chapter to the same extent as if it were copied at length herein."

SURETY, for value received, stipulates and agrees that no change, extension of time, alteration or addition to the terms of the contract, or to the work performed thereunder, or the plans, specifications, or drawings accompanying the same, shall in any way affect its obligation on this bonds, and it does hereby waive notice of any such change, extension of time, alteration or addition to the terms of the contract, or to the work to be performed thereunder.

IN WITNESS WHEREOF, the said PRINCIPAL and SURETY have signed and sealed this instrument this _____day of _____ 20_____.

PRINCIPAL:	SURETY:
_____	_____
Name of Contractor	Name of Surety
_____	_____
Signature	Signature
_____	_____
Printed Name and Title	Printed Name and Title
_____	_____
Address	Address
_____	_____
City, State, Zip	City, State, Zip

The name, address and phone number of the Resident Agent of Surety is:

_____

_____

MAINTENANCE BOND

BOND NO._____

STATE OF TEXAS §
§ KNOW ALL PERSONS BY THESE PRESENTS:
COUNTY OF Grayson §

THAT _____
(Name of Contractor) of _____ (City) _____ County, State of _____, as **PRINCIPAL** and _____
(Name of Surety) as **SURETY**, a corporation organized under the laws of the State of _____ as sureties, do hereby expressly acknowledge themselves to be held and bound to pay unto the City of Sherman, a municipal corporation, chartered by virtue of a special act of legislature of the State of Texas, at Sherman, Grayson County, Texas, the sum of:

_____ and _____/100 Dollars ($_____) for the payment of which sum will truly be made unto said City of Sherman, and its successors, and said principal and sureties to hereby bind themselves, their assigns and successors jointly and severally.

This obligation is conditioned, however, that whereas the said contractor has this day entered into a written contract with the said City of Sherman to build and construct _____
(Name of Project) which contract, plans and specifications therein mentioned are hereby expressly made a part hereof as though the same were written embodied herein.

WHEREAS, under the plans, specifications, and contract, it is provided that the contractor will maintain and keep in good repair the work herein contracted to be done and performed for a period of two (2) years from the date of the acceptance of said work, and to do all necessary repairing and/or reconstructing in whole or in part of said improvements that should be occationed by settlement of foundation, defective workmanship or materials furnished in the construction or any part thereof or any of the accessories thereto constructed by the contractor. It being understood that the purpose of this section, in part, is to cover all defective conditions arising by reason of defective material and charge the same against the said contractor and sureties on this obligation, and the said contractor sureties hereon shall be subject to the liquidation damages mentioned in said contract for each day's failure on its part to comply with the terms of said provisions of said contract. Now, therefore, if the said contractor shall keep and perform its said agreement to maintain said work and keep the same in repair for the said maintenance period of two (2) years, as provided, then these presents shall be null and void, and have no further effect, but if default shall be made by said contractor in the performance of its contract to so maintain and repair said work, then these presents shall have full force and effect, and said City of Sherman shall have and recover from the said contractor and its principal and sureties damages in the premises, as provided; and it is further agreed that this obligation shall be continuing one against the principal and sureties, hereon, and that successive recoveries may be and had hereon for successive branches until the full amount shall have been exhausted; and it is further understood that the obligation herein to maintain said work shall continue throughout said maintenance period, and the same shall not be changed, diminished or in any manner affected from any cause during said time.

IN WITNESS WHEREOF, the said **PRINCIPAL** and **SURETY** have signed and sealed this instrument this _____day of _____ 20_____.

PRINCIPAL:	**SURETY:**
_____	_____
Name of Contractor	Name of Surety
_____	_____
Signature	Signature
_____	_____
Printed Name and Title	Printed Name and Title
_____	_____
Address	Address
_____	_____
City, State, Zip	City, State, Zip

The name, address and phone number of the Resident Agent of Surety is:

_____

_____

ACKNOWLEDGEMENT

As the person or entity constructing public improvements in public rights-of-way or easements in the City of Sherman ("City"), as set forth in the attached City of Sherman Private Contract, _____(Name of Contractor) and _____(Name of Owner) acknowledge and agree to the following prior to the construction of said improvements:

1. Give at least five (5) work days' notice to the City Engineer of the construction start date.

2. Confirm that the plans to be followed are those which have been approved by the City Engineer, or that any changes thereto are approved in writing by the City Engineer.

3. Provide to the City Engineer Performance, Maintenance, and Payment Bonds for the improvements in the same amounts as if the City were engaging a contractor to do the work. The City shall be a named beneficiary on these bonds.

4. Provide to the City Engineer any soil tests deemed appropriate by the City Engineer.

5. Prior to acceptance of the improvements by the City, pay any fees for any reasonable retesting deemed appropriate by the City Engineer.

6. Provide timely notice to the City Engineer for the purposes of inspecting the work on the improvements, and make the work site available for City inspectors as needed.

7. Pay review, inspection and testing fees in the amount of $_____.

8. Provide the City with record drawings in pdf format and dwg/dxf format of the public improvements installed.

AGREED AND ACKNOWLEDGED this the_____day of_____, 20_____.

_____	_____
Name of Contractor (company)	Name of Owner (company)
_____	_____
Signature of Contractor's Representative	Signature of Owner's Representative
_____	_____
Print Name/Title of Contractor's Representative	Print Name/Title of Owner's Representative

SHERMAN CITY COUNCIL
Agenda Communication Form

City Council Regular Meeting Agenda Item No. H.4.

Meeting Date: 4/15/2024

Prepared By: Tom Pruitt, Utility Engineer

Approved By: Robby Hefton, City Manager

Caption:

**** RESOLUTION NO. 7284***

Authorizing Execution of Amendment No. 2 to the Professional Services Agreement with Freese and Nichols, Inc. for Design of the Northwest and Southwest Transmission Pipeline

Issue:

To consider an amendment to the professional services agreement with Freese and Nichols, Inc. for the design of the Northwest and Southwest Transmission Pipeline project.

Background:

The purpose of Amendment No. 2 is to provide an additional inspector for construction services for the installation of the 36-inch waterline.The original agreement provides for one inspector. Since this project will be constructed in three sections simultaneously, it is recommended to provide one additional inspector for a total of two inspectors. Staff believes that the two inspectors along with our testing and welding inspection services from GEOTEX should be adequate to complete the project with proper quality control.

Origination:

Engineering Department

Financial Consideration:

The total funding needed for Amendment No. 2 is $435,000.00, making a contract total of $6,648,760.00. This will be funded by GTUA Bond Funds.

Staff Recommendation:

It is recommended that Amendment No. 2 to the professional services agreement with Freese and Nichols, Inc. for the design of the Northwest and Southwest Transmission Pipeline project be approved.

Alternatives:

As may be directed by the City Council.

Attachments:

1. Resolution No. 7284
2. Amendment No. 2_v2
3. Res No. 6868 & Professional Services Agreement
4. Res No. 7075 & Signed Amendment No. 1
5. Location Map

RESOLUTION NO. 7284

A RESOLUTION OF THE CITY COUNCIL OF THE CITY OF SHERMAN, TEXAS, AUTHORIZING EXECUTION OF AMENDMENT NO. 2 TO THE PROFESSIONAL SERVICES AGREEMENT WITH FREESE AND NICHOLS, INC. FOR DESIGN OF THE NORTHWEST AND SOUTHWEST TRANSMISSION PIPELINE; FINDING AND DETERMINING THAT THE MEETING AT WHICH THIS RESOLUTION IS PASSED WAS NOTICED AND IS OPEN TO THE PUBLIC AS REQUIRED BY LAW.

BE IT RESOLVED BY THE CITY COUNCIL OF THE CITY OF SHERMAN, TEXAS:

SECTION 1. That the City Manager be and is hereby authorized and directed, subject to all contract documents being properly completed and approved as to form and content by the City Attorney, to execute Amendment No. 2 to the Professional Services Agreement with Freese and Nichols, Inc. for design of the Northwest and Southwest Transmission, in accordance with all contract documents attached hereto and made a part hereof for all purposes.

SECTION 2. That it is hereby officially found and determined that the meeting at which this resolution is passed is open to the public and that public notice of the time, place, and purpose of said meeting was given as required by law.

DULY PASSED AND APPROVED BY THE CITY COUNCIL OF THE CITY OF SHERMAN, TEXAS on this the 15th day of April 2024.

CITY OF SHERMAN, TEXAS

BY: _____
DAVID PLYLER, MAYOR

ATTEST:

BY: _____
LINDA ASHBY, CITY CLERK

APPROVED AS TO FORM AND CONTENT:
THE LAW FIRM OF ABERNATHY, ROEDER, BOYD & HULLETT, P.C.

BY: _____
RYAN D. PITTMAN, CITY ATTORNEY

AMENDMENT NO. 2

TO THE PROFESSIONAL SERVICES AGREEMENT FOR ENGINEERING DESIGN SERVICES BETWEEN THE CITY OF SHERMAN (OWNER) AND FREESE AND NICHOLS, INC. (ENGINEER) FOR THE NORTHWEST AND SOUTHWEST TRANSMISSION PIPELINE

Dated April 4, 2022 ("Original Agreement")

This Amendment No. 2 serves to increase the original contract fees of Six Million Two Hundred and Thirteen Thousand Seven Hundred and Sixty dollars ($6,213,760) by Four Hundred and Thirty-Five Thousand dollars ($435,000) to a total amount of Six Million Six Hundred and Forty Eight Thousand Seven Hundred Sixty dollars ($6,648,760) based on the following **additional** work to the project scope:

1. Special Services J – Construction Management Services
    a. Modify the services outlined for this task in the original agreement to include the addition of one (1) full-time on-site CM personnel on the 36-inch pipeline for a period of 12 months.
        i. Full-time CM services at 50 hours per week for 12 months – not to exceed 2,600 hours.

The contract amount under the Original Agreement shall be increased by a fee not to exceed the following amounts:

1. Special Services (Not to Exceed)
    a. Construction Management Services…….….. $435,000

Total Special Services…….. $435,000

TOTAL FEE INCREASE (NOT TO EXCEED): $435,000

ARTICLE III. TERM

1. No adjustment to project duration.

[Rest of page left intentionally blank]

This Amendment No. 2 shall be effective on the date it is executed by the last party to execute it. The OWNER and ENGINEER hereby agree to amend the Proposed Fees in EXIBIT B of this Original Agreement and Amendment No. 1 to read as follows:

Proposed Fees

Engineer shall be compensated as follows:

1. Basic Services (Lump Sum)
    a. Conceptual Study $344,600
    b. Preliminary Design (30%) $387,150
    c. Intermediate Design (60%) $747,950
    d. Final Design (90% and 100%) $1,210,100
    e. Bid Phase Services $108,600
    f. Construction Administration ..... **$**404,050
    g. Record Drawings $48,100

    Total Basic Services **$3,250,550**

2. Special Services (Not to Exceed)
    a. Topographic Surveying $355,650
    b. Easement Documents $215,035
    c. Subsurface Utility Engineering $107,225
    d. Geotechnical Engineering $361,700
    e. Environmental Services $108,900
    f. Archeological Investigation Services $76,200
    g. Corrosion Engineering Services $86,650
    h. Surge Protection Engineering Services $103,700
    i. Easement Acquisition Services $887,150
    j. Construction Management Services **$1,096,000**

    Total Special Services **$3,398,210**

CONTRACT TOTAL (NOT TO EXCEED): $6,648,760

[Rest of page left intentionally blank]

The parties hereby ratify and confirm all of the terms, provisions, covenants and conditions of the Original Agreement and acknowledge and agree that the Original Agreement remains in full force and effect, except as amended in this Amendment No. 2. To the extent that any provision contained herein conflicts with the Original Agreement and Amendment No. 1, the provision contained herein shall supersede such conflicting provision contained in the Original Agreement and Amendment No. 1. This Amendment No. 2 and the Original Agreement and Amendment No. 1 contain the entire agreement of the parties with respect to the matters contained herein. This Amendment No. 2 may not be modified or terminated except upon the provisions hereof or by the mutual written agreement of the Parties hereto.

[Rest of page left intentionally blank]

The parties hereby ratify and confirm all of the terms, provisions, covenants and conditions of the Original Agreement and acknowledge and agree that the Original Agreement remains in full force and effect, except as amended in this Amendment No. 2. To the extent that any provision contained herein conflicts with the Original Agreement, the provision contained herein shall supersede such conflicting provision contained in the Original Agreement. This Amendment No. 2 and the Original Agreement contain the entire agreement of the parties with respect to the matters contained herein. This Amendment No. 2 may not be modified or terminated except upon the provisions hereof or by the mutual written agreement of the Parties hereto.

[Rest of page left intentionally blank]

EXECUTED in three (3) counterparts (each of which is an original) on behalf of ENGINEER shown below, and on behalf of the OWNER by its City Manager (thereunto duly authorized) this _____ day of _____,2024.

OWNER:
CITY OF SHERMAN, TEXAS

_____
Robby Hefton, City Manager

ENGINEER:
FREESE AND NICHOLS, INC.

_____
Clayton C. Barnard, P.E., Principal

ATTEST:

_____
Linda Ashby
City Clerk

ATTEST:

_____

APPROVAL RECOMMENDED:

_____
Wayne E. Lee, P.E., CFM / Director Engineering

APPROVED AS TO FORM:
THE LAW FIRM OF ABERNATHY, ROEDER, BOYD & HULLETT, P.C.

BY: _____

NAME: _____
CITY ATTORNEY

CORPORATE ACKNOWLEDGMENT

THE STATE OF TEXAS§
§
COUNTY OF *Dallas* **§**

BEFORE ME, the undersigned authority, a Notary Public in and for said County and State, on this day personally appeared Clayton Barnard of Freese and Nichols, Inc. known to me to be the person and officer whose name is subscribed to the foregoing instrument and acknowledged to me that the same was the act of the said Freese and Nichols, Inc., a corporation, that (s)he was duly authorized to perform the same by appropriate resolution of the board of directors of such corporation for the purposes and consideration therein expressed, and in the capacity therein stated.

GIVEN UNDER MY HAND AND SEAL OF OFFICE this the 15th day of March, A.D. 2024.

Jane S. Jenks
Notary Public In and For DALLAS County, Texas

My Commission Expires:

1-22-27

JANE S. JENKS
Notary Public, State of Texas
Comm. Expires 01-22-2027
Notary ID 12444557-3

RESOLUTION NO. 6868

A RESOLUTION OF THE CITY COUNCIL OF THE CITY OF SHERMAN, TEXAS, AUTHORIZING EXECUTION OF A PROFESSIONAL SERVICES AGREEMENT WITH FREESE AND NICHOLS, INC. FOR DESIGN OF THE NORTHWEST AND SOUTHWEST TRANSMISSION PIPELINE; FINDING AND DETERMINING THAT THE MEETING AT WHICH THIS RESOLUTION IS PASSED WAS NOTICED AND IS OPEN TO THE PUBLIC AS REQUIRED BY LAW.

BE IT RESOLVED BY THE CITY COUNCIL OF THE CITY OF SHERMAN, TEXAS:

SECTION 1. That the City Manager be and is hereby authorized and directed, subject to all contract documents being properly completed and approved as to form and content by the City Attorney, to execute a Professional Services Agreement with Freese and Nichols, Inc. for design of the Northwest and Southwest Transmission, in accordance with all contract documents attached hereto and made a part hereof for all purposes.

SECTION 2. That it is hereby officially found and determined that the meeting at which this resolution is passed is open to the public and that public notice of the time, place, and purpose of said meeting was given as required by law.

DULY PASSED AND APPROVED BY THE CITY COUNCIL OF THE CITY OF SHERMAN, TEXAS on this the 4th day of April, 2022.

CITY OF SHERMAN, TEXAS

ATTEST:

BY: Linda Ashby
LINDA ASHBY, CITY CLERK

BY: _____
DAVID PLYLER, MAYOR

APPROVED AS TO
FORM AND CONTENT:
THE LAW FIRM OF ABERNATHY,
ROEDER, BOYD & HULLETT, P.C.

BY: _____
RYAN D. PITTMAN, CITY CLERK

AGREEMENT

BETWEEN

THE CITY OF SHERMAN, TEXAS AND

FREESE AND NICHOLS, INC

FOR

PROFESSIONAL SERVICES

Made as of the 4th day of April, 2022:

Between City: **The City of Sherman, Texas**
220 W. Mulberry Street
Sherman, Texas 75090
Telephone: (903) 892-7208

and Consultant: **Freese and Nichols, Inc.**
5805 Main Street, Suite B
Frisco, Texas 75034
Telephone: (972) 624-9201

for the following Project: **Northwest and Southwest Transmission Pipeline**

THIS AGREEMENT ("Agreement") is made and entered into by and between the City of Sherman, Texas, a home-rule municipality ("City"), and Freese and Nichols, Inc, a Texas corporation ("Consultant"), to be effective from and after the date as provided above. City and Consultant are at times each referred to herein as a "party" or collectively as the "parties."

WHEREAS, City desires to engage Consultant to provide professional civil engineering services for the Northwest and Southwest Transmission Pipeline Project ("Project"); and

WHEREAS, Consultant desires to render such professional services ("Services") for City on the terms and conditions provided herein.

NOW, THEREFORE, KNOW ALL PERSONS BY THESE PRESENTS:

That for and in consideration of the covenants contained herein, for the mutual benefits to be obtained hereby and for other good and valuable consideration, the receipt and sufficiency of which are hereby acknowledged, the parties agree as follows:

ARTICLE 1
CONSULTANT'S SERVICES

1.1 **Employment of Consultant** – City hereby agrees to retain Consultant to perform the Services in connection with the Project. Consultant agrees to perform the Services in accordance with the terms and conditions of this Agreement. Consultant further agrees that if any employee of Consultant who is performing the day-to-day Services under this Agreement for the Project is separated, for any reason, from employment with Consultant, Consultant shall provide City with written notice thereof at least five (5) business days' prior to said separation unless circumstances reasonably warrant a shorter notice period, which shall not exceed two (2) business days following the separation.

1.2 **Scope of Services** – The parties agree that Consultant shall perform the Services as are set forth and described in **Exhibit A**, attached hereto and incorporated herein by reference for all purposes ("Scope of Services"). The parties understand and agree that deviations or modifications to the Scope of Services described in **Exhibit A**, in the form of written amendment to this Agreement, may be authorized from time to time by City ("Amendment(s)").

1.2.1 **Requirement of Written Amendment** – "Extra" work, "claims" invoiced as "extra" work or "claims" which have not been issued as a duly executed, written Amendment by the Sherman Director of Engineering or designee will not be authorized for payment and/or shall not become part of this Agreement. A duly executed, written Amendment requiring additional funding of $50,000 or more of the original contract amount shall be preceded by the Sherman City Council's authorization for the Sherman City Manager to execute said Amendment.

1.2.2 **CONSULTANT SHALL NOT PERFORM ANY "EXTRA" WORK AND/OR ADDITIONAL SERVICES WITHOUT A DULY EXECUTED, WRITTEN AMENDMENT ISSUED BY THE CITY**.

1.3 **Schedule of Work** – Consultant agrees to commence work immediately on the execution of this Agreement, and to proceed diligently with said work to completion as described in the Project Engineering Budget Summary, attached hereto as **Exhibit B** and incorporated herein by reference for all purposes.

1.4 **Standard of Care** – Consultant shall perform the Services required hereunder in accordance with the prevailing engineering standard of care by exercising the skill and care ordinarily utilized by engineers performing the same or similar services under the same or similar circumstances in the State of Texas.

ARTICLE 2
CITY'S RESPONSIBILITIES

City shall do the following in a timely manner so as not to delay the Services of Consultant:

2.1 **Project Data** – City shall furnish required information that is reasonably requested by Consultant and that City has in its possession at the time of Consultant's request, as expeditiously as necessary for the orderly progress of the Project, and Consultant shall be entitled to rely upon the accuracy and completeness of the information furnished by City under this Article 2.1.

2.2 **City Project Manager** – When necessary in City's sole discretion, City shall designate a representative authorized to act on City's behalf with respect to the Project ("Project Manager"). City, the Project Manager and/or his or her authorized designee shall examine the documents submitted by Consultant and shall render any required decisions pertaining thereto as soon as practicable to avoid unreasonable delay in the progress of Consultant's Services.

ARTICLE 3
CONSULTANT'S COMPENSATION

3.1 **Compensation for Consultant's Services** – As described in "Article 1, Consultant's Services" of this Agreement, compensation for this Project shall be: (a) for Basic Services, on a lump sum basis in an amount not to exceed **Three Million Two Hundred Seventeen Thousand Three Hundred Fifty Dollars ($3,217,350)**; and (b) for Special Services, on cost-plus basis in an amount not to exceed **Two Million Eight Hundred Fifty-Six Thousand Two Hundred Dollars ($2,856,200)** (collectively, "Consultant's Fee"); and (c) paid in accordance with this Article 3 and the Project Design Budget Summary as set forth in **Exhibit B**.

3.1.1 **Completion of Record Documents** – City and Consultant agree that the completion of Record Documents and/or "As-Built" Documents, including hard copy formatting and electronic formatting, shall be completed, submitted to, and accepted by City prior to payment. Completion of the Record Documents and/or "As-Built" documents shall be included in the Consultant's Fee and considered to be within the Scope of Services defined under this Agreement." The electronic formatting shall be consistent with the standards established in **Exhibit C**, Guidelines for Computer Aided Design and Drafting ("CADD"), which is attached hereto and incorporated herein by reference for all purposes.

3.1.2 **Disputes between City and Construction Contractor** – If the Project involves Consultant performing Construction Administration Services relating to an agreement between a Construction Contractor ("Contractor") and City, and on receipt of a written request by City, Consultant shall research previous and existing conditions of the Project, and make a determination whether or not to certify that sufficient cause exists for City to

declare Contractor in default of the terms and conditions of the Agreement. Consultant shall submit his findings in writing to City, or submit a written request for a specific extension of time (including the basis for such extension), within fifteen (15) calendar days of receipt of the written request from City. City and Consultant agree that if requested by City, completion of this task shall be included in the Consultant's Fee and considered to be within the Scope of Services as defined under this Agreement.

3.1.3 **Consultation and Approval by Governmental Authorities and Franchised Utilities** – Consultant shall be solely responsible for identifying and analyzing the requirements of governmental agencies and all franchise utilities involved with the Project, and for consulting with such agencies and utilities to obtain all necessary approvals and/or permissions. Consultant shall be responsible for preparation and timely submittal of documents required for review, approval and/or recording by such agencies and/or utilities. Consultant shall be solely responsible for making such changes in the construction documents ("Construction Documents") as may be required by existing written standards promulgated by such agencies and/or utilities at no additional charge to City.

3.2 **Direct Expenses** – Direct Expenses ("Direct Expenses") are included in Consultant's Fee as described in Article 3.1 of this Agreement and include actual reasonable and necessary expenditures made by Consultant and Consultant's employees and subcontractors in the interest of the Project. All submitted Direct Expenses are to be within the amounts as stated in the Project Engineering Budget Summary set forth in **Exhibit B**, and consistent with **Exhibit D**, Guidelines for Direct Expenses; General and Administrative Markup; Travel and Subsistence Expenses, which is attached hereto and incorporated herein by reference for all purposes. Consultant shall be solely responsible for the auditing and accuracy of all Direct Expenses, including those of its subcontractors, prior to submitting to City for reimbursement. Any over-payment by City for errors in submittals for reimbursement may be deducted from Consultant's subsequent payment for Services; provided, however, that this shall not be City's sole and exclusive remedy for said over-payment.

3.3 **Additional Services** – Consultant shall provide the Services as described in the Scope of Services set forth in **Exhibit A** of this Agreement. If authorized in writing by City, Consultant shall provide additional services, to be compensated as provided in an Amendment to the Contract on a cost not to exceed sum or hourly

basis in accordance with this paragraph ("Additional Services") and a mutually agreed estimate of man-hours and expenses. These services may include, but are not limited to:

3.3.1 Additional meetings, hearings, work-sessions or other similar presentations which are not provided for or contemplated in the Scope of Services described in **Exhibit A**.

3.3.2 Additional drafts and revisions to the Project which are not provided for or contemplated in the Scope of Services as described in **Exhibit A**.

3.3.3 Additional copies of final reports and construction plans which are not provided for or contemplated in the Scope of Services as described in **Exhibit A**.

3.3.4 Photography, professional massing models which are not provided for or contemplated in the Scope of Services as described in **Exhibit A**.

3.3.5 Compensation for Additional Services authorized by City shall be in addition to Consultant's Fee and shall be based on direct billable labor rates and expenses.

3.3.6 Compensation for Additional Services authorized by City shall be in addition to Consultant's Fee and shall be based on an hourly basis according to the following personnel rates. The rates set forth in this chart are subject to reasonable change provided prior written notice of said change is given to and approved by City.

Hourly Billable Rates by Position

Position	Range of Hourly Rates	
Professional 1	85	159
Professional 2	107	168
Professional 3	131	244
Professional 4	163	262
Professional 5	199	375
Professional 6	211	427
Construction Manager 1	95	189
Construction Manager 2	116	204
Construction Manager 3	179	240
Construction Manager 4	219	310
CAD Technician/Designer 1	77	158
CAD Technician/Designer 2	112	169
CAD Technician/Designer 3	143	223
Corporate Project Support 1	56	135

Corporate Project Support 2	78	188
Corporate Project Support 3	112	285
Intern/Coop	45	115

3.4 **Invoices** – No payment to Consultant shall be made until Consultant tenders an invoice to City. Consultant shall submit monthly invoices for Services rendered, based upon the actual percentage of work complete at the time the invoice is prepared, or shall submit invoices to City immediately upon completion of each individual task listed in **Exhibit B**. On all submitted invoices for Services rendered, Consultant shall include appropriate background materials to support the submitted charges on said invoice. Upon request, such background material may include, but is not limited to, employee timesheets, invoices for work obtained from other parties, and receipts and/or log information relating to Direct Expenses. All invoices shall provide a summary methodology for administrative markup and/or overhead charges.

3.5 **Timing of Payment** – City shall make payment to Consultant for said invoices within thirty (30) days following receipt and acceptance thereof. The parties agree that payment by City to Consultant is considered to be complete upon mailing of payment by City. Furthermore, the parties agree that the payment is considered to be mailed on the date that the payment is postmarked.

3.6 **Disputed Payment Procedures** – In the event of a disputed or contested billing by City, only that portion so contested may be withheld from payment, and the undisputed portion will be paid. City shall notify Consultant of a disputed invoice, or portion of an invoice, in writing by the twenty-first (21st) calendar day after the date City receives the invoice. City shall provide Consultant an opportunity to cure the basis of the dispute. If a dispute is resolved in favor of Consultant, City shall proceed to process said invoice, or the disputed portion of the invoice, within the provisions of Article 3.5 of this Agreement. If a dispute is resolved in favor of City, Consultant shall submit to City a corrected invoice, reflecting any and all payment(s) of the undisputed amounts, documenting the credited amounts, and identifying outstanding amounts on said invoice to aid City in processing payment for the remaining balance. Such revised invoice shall have a new invoice number, clearly referencing the previous submitted invoice. City agrees to exercise reasonableness in contesting any billing or portion thereof that has background materials supporting the submitted charges.

3.7 **Failure to Pay** – Failure of City to pay an invoice, for a reason other than on written notification as stated in the provisions of Article 3.6 of this Agreement, to Consultant within sixty (60) days from the date of the invoice shall grant Consultant the right, in addition to any and all other rights provided, to, upon written notice to City, suspend performance under this Agreement, and such act or acts shall not be deemed a breach of this Agreement. However, Consultant shall not suspend

performance under this Agreement prior to the tenth (10th) calendar day after written notice of suspension was provided to City, in accordance with Chapter 2251, Subchapter "D" of the TEX. GOV'T CODE. City shall not be required to pay any invoice submitted by Consultant if Consultant breached any provision(s) herein.

3.8 **Adjusted Compensation** – If the Scope of the Project ("Scope of the Project") or if the Services are materially changed due to no error by Consultant in the performance of Services under this Agreement, the amounts of Consultant's compensation shall be equitably adjusted as approved by City in its sole discretion. Any additional amounts paid to Consultant as a result of any material change to the Scope of the Project shall be authorized by written Change Order duly executed by both parties before the Services are performed.

3.9 **Project Suspension** – If the Project is suspended or abandoned in whole or in part for more than three (3) months, Consultant shall be entitled to compensation for any and all work completed to the satisfaction of City in accordance with the provisions of this Agreement prior to suspension or abandonment. In the event of such suspension or abandonment, Consultant shall deliver to City all finished or unfinished documents, data, studies, drawings, maps, models, reports, photographs and/or any other items prepared by Consultant in connection with this Agreement prior to Consultant receiving final payment. If the Project is resumed after being suspended for more than three (3) months, Consultant's compensation shall be equitably adjusted as approved by City. Any additional amounts paid to Consultant after the Project is resumed shall be agreed upon in writing by both parties before the services are performed.

3.10 **Fixed Budget Limit for Construction Cost** - If a fixed budget limit for the Construction Cost has been established, the Consultant shall be permitted to make reasonable adjustments in the scope of the Project and to include alternate bid items in the Bid Proposal to adjust the Construction Cost to the fixed limit. However, this paragraph shall not operate to increase the fixed budget limit of the Construction Cost established in this paragraph. All adjustments in the scope of the Project shall be approved by the City and documented in writing. Should the lowest bona fide bid for construction of the Project be in excess of 130% of $(58,771,000) due to the negligence of the Consultant, the City may (1) give written approval of an increase in such fixed limit, (2) authorize rebidding or re-negotiating of the Project, (3) terminate the Project and this Agreement in accordance herewith, or (4) require that the Consultant adjust the Project scope or quality, or both, as necessary to reduce the Construction Cost to within the budgetary constraints. In the case of (4) the Consultant, without additional charge to the City, shall consult with the City and shall revise and modify the drawings and specifications as necessary to achieve compliance with the fixed limitation on Construction Cost. These revisions and modifications may include splitting the Project into multiple Construction Phases that will fall within budget constraints. The Consultant shall provide the services defined in Exhibit A, as required, for each of the new phases created by splitting the Project. Absent negligence on the part

of the Consultant in making its estimates of probable Construction Cost, providing services as defined in Exhibit A shall be the limit of the Consultant's Services related to the establishment of such fixed limitation of Construction Costs. The Consultant shall be entitled to compensation for all other services performed in accordance with this Agreement.

ARTICLE 4
OWNERSHIP OF DOCUMENTS

4.1 **Documents Property of City** – The Project is the property of City, and Consultant may not use the documents, plans, data, studies, surveys, drawings, maps, models, reports, photographs and/or any materials for any other purpose not relating to the Project without City's prior written consent. City shall be furnished with such reproductions of the Project, plans, data, documents, maps, and any other information as defined in **Exhibit A**. Upon completion of the work, or any earlier termination of this Agreement under Article 3 and/or Article 8 of this Agreement, Consultant will revise plans, data, documents, maps, and any other information as defined in **Exhibit A** to reflect changes while working on the Project through the date of completion of the work, as solely determined by City, or the effective date of any earlier termination of this Agreement under Article 3 and/or Article 8 of this Agreement, and promptly furnish the same to City in an acceptable electronic format. All such reproductions shall be the property of City who may use them without Consultant's permission for any purpose relating to the Project, including, but not limited to, completion of the Project, and/or additions, alterations, modifications, and/or revisions to the Project. Any reuse of the documents not relating to the Project shall be at City's own risk.

4.2 **Documents Subject to Laws Regarding Public Disclosure** – Consultant acknowledges that City is a governmental entity and that all documents, plans, data, studies, surveys, drawings, maps, models, reports, photographs and/or any items prepared or furnished by Consultant (and Consultant's professional associates and/or sub-consultants) under this Agreement are instruments of service in respect of the Project and property of City. Upon completion of the Project, all of the documents, plans, data, studies, surveys, drawings, maps, models, reports, photographs and/or any items prepared or furnished by Consultant (and Consultant's professional associates and/or sub-consultants) shall thereafter be subject to the Texas Public Information Act (Chapter 552, TEX. GOV'T CODE, as amended) and any other applicable laws requiring public disclosure of the information contained in said documents.

ARTICLE 5
CONSULTANT'S INSURANCE REQUIREMENTS

5.1 **Required General Liability Insurance** – Consistent with the terms and provisions of **Exhibit E**, Contractor Insurance Guidelines, which is attached hereto and incorporated herein by reference for all purposes, Consultant shall procure and

maintain throughout the term of this Agreement, at no expense to City, a general liability insurance policy with a company that maintains a minimum rating of "A" by A.M. Best's Key Rating Guide, or other equivalent rating service(s), and is authorized to transact business in the State of Texas, in an amount not less than One Million and 00/100 Dollars ($1,000,000.00) for each occurrence, and Two Million and 00/100 Dollars ($2,000,000.00) in the aggregate. Such policy shall name City, its officers, agents, representatives, and employees as additional insureds as to all applicable coverage. Such policy shall provide for a waiver of subrogation against City for injuries, including death, property damage, or any other loss to the extent that same is covered by the proceeds of the insurance. Such policy shall require the provision of written notice to City at least thirty (30) days prior to cancellation, non-renewal or material modification of any policies, evidenced by return receipt or United States Certified Mail. Consultant shall furnish City with certificates and required endorsement(s) evidencing such coverage prior to commencing work on the Project.

5.2 **Required Professional Liability Insurance** – Consistent with the terms and provisions of **Exhibit E**, Consultant shall procure and maintain throughout the term of this Agreement, at no expense to City, a professional liability (errors and omissions) insurance policy with a company that maintains a minimum rating of "A" by A.M. Best's Key Rating Guide, or other equivalent rating service(s), and is authorized to transact business in the State of Texas, in an amount not less than One Million and 00/100 Dollars ($1,000,000.00) for each claim, and Two Million and 00/100 Dollars ($2,000,000.00) in the aggregate. Such policy shall require the provision of written notice to City at least thirty (30) days prior to cancellation, non-renewal or material modification of any policies, evidenced by return receipt or United States Certified Mail. Consultant shall furnish City with certificates and required endorsement(s) evidencing such coverage prior to commencing work on the Project.

5.3 **Required Workers Compensation Insurance** – Consistent with the terms and provisions of **Exhibit E**, Consultant shall procure and maintain throughout the term of this Agreement, at no expense to City, all Statutory Workers Compensation Insurance as required by the laws of the State of Texas. Such insurance policy shall be with a company that maintains a minimum rating of "A" by A.M. Best's Key Rating Guide, or other equivalent service(s), and is authorized to transact business in the State of Texas. Such policy shall require the provision of written notice to City at least thirty (30) days prior to cancellation, non-renewal or material modification of any policies, evidenced by return receipt or United States Certified Mail. Consultant shall furnish City with certificates and required endorsement(s) evidencing such coverage prior to commencing work on the Project.

5.4 **Circumstances Requiring Umbrella Coverage or Excess Liability Coverage** – If the Project's size and scope warrant, and if identified on the checklist located in **Exhibit E**, Consultant shall procure and maintain throughout the term of this Agreement, at no expense to City, an umbrella coverage or excess liability

coverage insurance policy with a company that maintains a minimum rating of "A" by A.M. Best's Key Rating Guide, or other equivalent rating service(s), and is authorized to transact business in the State of Texas, in an amount of Two Million and 00/100 Dollars ($2,000,000.00). Such policy shall require the provision of written notice to City at least thirty (30) days prior to cancellation, non-renewal, or material modification of any policies, evidenced by return receipt or United States Certified Mail. Consultant shall furnish City with certificates and required endorsement(s) evidencing such coverage prior to commencing work on the Project.

ARTICLE 6
CONSULTANT'S ACCOUNTING RECORDS

Records of Direct Expenses and expenses pertaining to services performed in conjunction with the Project shall be kept on the basis of generally accepted accounting principles. Invoices will be sent to City as indicated in Article 3.4 of this Agreement. Copies of employee time sheets, receipts for direct expense items and other records of Project expenses will be made available if requested.

ARTICLE 7
AUDITS AND RECORDS/VENDOR DISCLOSURE

Consultant agrees that at any time during normal business hours and as often as City may deem necessary, Consultant shall make available to representatives of City for examination all of its records with respect to all matters covered by this Agreement, and will permit such representatives of City to audit, examine, copy and make excerpts or transcripts from such records, and to make audits of all contracts, invoices, materials, payrolls, records of personnel, conditions of employment and other data relating to all matters covered by this Agreement, and for a period of four (4) years from the date of final settlement of this Agreement or for such other or longer period, if any, as may be required by applicable statute or other lawful requirement.

Consultant agrees that it is further aware of the vendor disclosure requirements set forth in Chapter 176, TEX. LOC. GOV'T CODE, as amended, and will abide by the same. In this connection, a lawful representative of Consultant shall execute and deliver to City the Conflict of Interest Questionnaire, Form CIQ, attached hereto as **Exhibit F** and incorporated herein for all purposes, no later than the Effective Date of this Agreement.

ARTICLE 8
TERMINATION OF AGREEMENT/REMEDIES

City may, upon thirty (30) days written notice to Consultant, terminate this Agreement, for any reason or no reason at all, before the termination date hereof, without prejudice to any other remedy it may have. If City terminates this Agreement due to a default of and/or breach by Consultant and the expense of hiring a replacement Consultant exceeds Consultant's Fee at the time of termination, Consultant waives its right to any portion of

Consultant's Fee as set forth in Article 3 of this Agreement and agrees to pay any costs over and above the fee which City is required to pay in order to finish the Project. On any default and/or breach by Consultant, City may elect not to terminate the Agreement, and in such event it may make good the deficiency in which the default consists, and deduct the costs from Consultant's Fee due Consultant as set forth in Article 3 of this Agreement. If City terminates this Agreement and Consultant is not in default of the Agreement, Consultant shall be entitled to compensation for any and all work completed to the satisfaction of City in accordance with the provisions of this Agreement prior to termination.

In the event of any termination, Consultant shall deliver to City all finished and/or unfinished documents, data, studies, surveys, drawings, maps, models, reports, photographs and/or any items prepared by Consultant in connection with this Agreement prior to Consultant receiving final payment.

The rights and remedies provided by this Agreement are cumulative, and the use of any one right or remedy by either party shall not preclude or waive its rights to use any or all other remedies. These rights and remedies are given in addition to any other rights the parties may have by law, statute, ordinance, or otherwise.

ARTICLE 9
DISPUTE RESOLUTION/MEDIATION

In addition to all remedies at law, the parties may agree to attempt to resolve any controversy, claim or dispute arising out of or relating to the interpretation or performance

of this Agreement, or breach thereof, by voluntary mediation to be conducted by a mutually acceptable mediator. However, if both parties do not agree to voluntarily mediate any such controversy, claim or dispute, mediation shall not be required.

ARTICLE 10
INDEMNITY

CONSULTANT SHALL RELEASE, DEFEND, INDEMNIFY AND HOLD HARMLESS CITY AND ITS CITY COUNCIL MEMBERS, OFFICERS, AGENTS, REPRESENTATIVES AND EMPLOYEES (COLLECTIVELY REFERRED TO AS "CITY" FOR PURPOSES OF THIS ARTICLE 10) FROM AND AGAINST ALL DAMAGES, INJURIES (WHETHER IN CONTRACT OR IN TORT, INCLUDING PERSONAL INJURY AND DEATH), CLAIMS, PROPERTY DAMAGES (INCLUDING LOSS OF USE), LOSSES, DEMANDS (REGARDLESS OF WHETHER THE ALLEGATIONS ARE FALSE, FRAUDULENT OR GROUNDLESS), SUITS, ACTIONS, JUDGMENTS, LIENS, COSTS AND EXPENSES, INCLUDING REASONABLE ATTORNEY'S FEES AND EXPENSES (INCLUDING ATTORNEY'S FEES AND EXPENSES INCURRED IN ENFORCING THIS ARTICLE 10), THAT IN WHOLE OR IN PART ARISE OUT OF OR ARE CONNECTED WITH, OR THAT ARE ALLEGED TO HAVE ARISEN OUT OF OR CONNECTED WITH, GOODS AND/OR SERVICES PROVIDED BY CONSULTANT, ITS OFFICERS, AGENTS, REPRESENTATIVES, EMPLOYEES, SUBCONTRACTORS, LICENSEES, INVITEES OR ANY OTHER THIRD PARTIES FOR WHOM CONSULTANT IS LEGALLY RESPONSIBLE (COLLECTIVELY REFERRED TO AS "CONSULTANT" FOR PURPOSES OF THIS ARTICLE 10) PURSUANT TO THIS AGREEMENT AND/OR THE NEGLIGENT, GROSSLY NEGLIGENT AND/OR INTENTIONAL WRONGFUL ACT AND/OR OMISSION OF CONSULTANT IN ITS/THEIR PERFORMANCE OF THIS AGREEMENT, REGARDLESS OF THE JOINT OR CONCURRENT NEGLIGENCE OR STRICT LIABILITY OF THE CITY (COLLECTIVELY, "CLAIMS"). THIS INDEMNIFICATION PROVISION AND THE USE OF THE TERM "CLAIMS" IS ALSO SPECIFICALLY INTENDED TO APPLY TO, BUT IS NOT LIMITED TO, ANY AND ALL CLAIMS, WHETHER CIVIL OR CRIMINAL, BROUGHT AGAINST CITY BY ANY GOVERNMENT AUTHORITY OR AGENCY RELATED TO ANY PERSON PROVIDING SERVICES UNDER THIS AGREEMENT THAT ARE BASED ON ANY FEDERAL IMMIGRATION LAW AND ANY AND ALL CLAIMS, DEMANDS, DAMAGES, ACTIONS AND CAUSES OF ACTION OF EVERY KIND AND NATURE, KNOWN AND UNKNOWN, EXISTING OR CLAIMED TO EXIST, RELATING TO OR ARISING OUT OF ANY EMPLOYMENT RELATIONSHIP BETWEEN CONSULTANT AND ITS EMPLOYEES OR SUBCONTRACTORS AS A RESULT OF THAT SUBCONTRACTOR'S OR EMPLOYEE'S

EMPLOYMENT AND/OR SEPARATION FROM EMPLOYMENT WITH THE CONSULTANT, INCLUDING BUT NOT LIMITED TO ANY DISCRIMINATION CLAIM BASED ON SEX, SEXUAL ORIENTATION OR PREFERENCE, RACE, RELIGION, COLOR, NATIONAL ORIGIN, AGE OR DISABILITY UNDER FEDERAL, STATE OR LOCAL LAW, RULE OR REGULATION, AND/OR ANY CLAIM FOR WRONGFUL TERMINATION, BACK PAY, FUTURE WAGE LOSS, OVERTIME PAY, EMPLOYEE BENEFITS, INJURY SUBJECT TO RELIEF UNDER THE WORKERS' COMPENSATION ACT OR WOULD BE SUBJECT TO RELIEF UNDER ANY POLICY FOR WORKERS COMPENSATION INSURANCE, AND ANY OTHER CLAIM, WHETHER IN TORT, CONTRACT OR OTHERWISE. CONSULTANT IS EXPRESSLY REQUIRED TO DEFEND CITY AGAINST ALL SUCH CLAIMS; PROVIDED, HOWEVER, THAT IF A COURT OF COMPETENT JURISDICTION SIGNS A JUDGMENT THAT BECOMES FINAL AND NON-APPEALABLE, DETERMINING THAT THE CITY (WITHOUT WAIVING ANY GOVERNMENTAL IMMUNITY) HAS JOINT, CONCURRENT OR SOLE NEGLIGENCE FOR THE CLAIMS IN ACCORDANCE WITH THE LAWS OF THE STATE OF TEXAS ("JUDGMENT"), THEN CONSULTANT IS NOT REQUIRED TO INDEMNIFY OR DEFEND CITY TO THE EXTENT OF THE NEGLIGENCE APPORTIONED TO CITY FOR EACH CAUSE(S) OF ACTION IDENTIFIED IN THE JUDGMENT. IN THE EVENT THE JUDGMENT PROVIDES THAT CITY IS JOINTLY, CONCURRENTLY OR SOLELY NEGLIGENT FOR THE CLAIMS REFERRED TO THEREIN, CITY AGREES TO REIMBURSE CONSULTANT FOR ALL REASONABLE AND NECESSARY COSTS INCURRED AND PAID BY CONSULTANT THAT ARE ATTRIBUTABLE TO CITY'S PERCENTAGE OF JOINT, CONCURRENT OR SOLE NEGLIGENCE, AS SET FORTH IN THE JUDGMENT, INCLUDING REASONABLE AND NECESSARY ATTORNEY'S FEES AND EXPENSES, WITHIN SIXTY (60) DAYS OF THE DATE THE JUDGMENT BECOMES FINAL AND NON-APPEALABLE. IF THIS AGREEMENT IS A CONTRACT FOR ENGINEERING OR ARCHITECTURAL SERVICES, THEN CONSULTANT'S INDEMNITY AND DEFENSE OBLIGATIONS UNDER THIS ARTICLE 10 ARE LIMITED BY, AND TO BE READ AS COMPLYING WITH, SECTION 271.904 OF THE TEXAS LOCAL GOVERNMENT CODE.

IN ITS SOLE DISCRETION, CITY SHALL HAVE THE RIGHT TO APPROVE OR SELECT DEFENSE COUNSEL TO BE RETAINED BY CONSULTANT IN FULFILLING ITS OBLIGATION HEREUNDER TO DEFEND AND INDEMNIFY CITY, UNLESS SUCH RIGHT IS EXPRESSLY WAIVED BY CITY IN WRITING. CITY RESERVES THE RIGHT TO PROVIDE A PORTION OR ALL OF ITS OWN DEFENSE; HOWEVER, CITY IS UNDER NO OBLIGATION TO DO SO. ANY SUCH ACTION BY CITY IS NOT TO BE CONSTRUED AS A WAIVER OF

CONSULTANT'S OBLIGATION TO DEFEND CITY OR AS A WAIVER OF CONSULTANT'S OBLIGATION TO INDEMNIFY CITY PURSUANT TO THIS AGREEMENT. CONSULTANT SHALL RETAIN CITY-APPROVED DEFENSE COUNSEL WITHIN SEVEN (7) BUSINESS DAYS OF CITY'S WRITTEN NOTICE THAT CITY IS INVOKING ITS RIGHT TO DEFENSE OR INDEMNIFICATION UNDER THIS AGREEMENT. IF CONSULTANT FAILS TO RETAIN COUNSEL WITHIN SUCH TIME PERIOD, CITY SHALL HAVE THE RIGHT TO RETAIN DEFENSE COUNSEL ON ITS OWN BEHALF, AND CONSULTANT SHALL BE LIABLE FOR ALL COSTS INCURRED BY CITY. THE RIGHTS AND OBLIGATIONS CREATED BY THIS ARTICLE SHALL SURVIVE TERMINATION OF THIS AGREEMENT.

ARTICLE 11
NOTICES

Any notice provided or permitted to be given under this Agreement must be in writing and may be served by depositing the same in the United States Mail, addressed to the party to be notified, postage pre-paid and registered or certified with return receipt requested; by facsimile; by electronic mail, with documentation evidencing the addressee's receipt thereof; or by delivering the same in person to such party a via hand-delivery service, or any courier service that provides a return receipt showing the date of actual delivery of same to the addressee thereof. Notice given in accordance herewith shall be effective upon receipt at the address of the addressee. For purposes of notification, the addresses of the parties shall be as follows:

If to City, addressed to:
Wayne E. Lee, P.E., CFM
Director of Engineering
City of Sherman
220 W Mulberry St.
Sherman, TX 75091
Telephone: (903) 892-7327
Email: waynel@cityofsherman.com

With a copy to:
Abernathy, Roeder, Boyd & Hullett, P.C.
Attention: Ryan D. Pittman
1700 Redbud Blvd., Suite 300
McKinney, Texas 75069
Telephone: (214) 544-4000
Facsimile: (214) 544-4054
Email: rpittman@abernathy-law.com

If to Consultant, addressed to:

Clayton C. Barnard, P.E.
Principal/ Vice President
Freese and Nichols, Inc.
5805 Main Street, Suite B
City, TX 75034
Telephone: (972) 624-9207
Email: ccb@freese.com

ARTICLE 12
MISCELLANEOUS

12.1 **Complete Agreement** – This Agreement, including the exhibits hereto labeled "A" through "F," all of which are incorporated herein for all purposes, constitute the entire Agreement by and between the parties regarding the subject matter hereof and supersedes all prior and/or contemporaneous written and/or oral understandings. This Agreement may not be amended, supplemented, and/or modified except by written agreement duly executed by both parties. The following exhibits are attached below and made a part of this Agreement:

12.1.1 **Exhibit A**, Scope of Services.

12.1.2 **Exhibit B**, Project Engineering Budget Summary.

12.1.3 **Exhibit C**, Guidelines for Computer Aided Design and Drafting (CADD).

12.1.4 **Exhibit D**, Guidelines for Direct Expenses; General and Administrative Markup; Travel and Subsistence Expenses.

12.1.5 **Exhibit E**, Contractor Insurance Guidelines.

12.1.6 **Exhibit F**, Conflict of Interest Questionnaire, Form CIQ.

To the extent that **Exhibit A**, **Exhibit B**, **Exhibit C**, **Exhibit D**, **Exhibit E**, or **Exhibit F** are in conflict with provisions of this Agreement or each other, the provisions of this Agreement, then the provisions of **Exhibit B**, **Exhibit C**, **Exhibit D**, **Exhibit E**, **Exhibit F** or **Exhibit A** shall prevail in that order.

12.2 **Assignment and Subletting** – Consultant agrees that neither this Agreement nor the work to be performed hereunder will be assigned or sublet without the prior written consent of City. Consultant further agrees that the assignment or subletting of any portion or feature of the work or materials required in the performance of this Agreement shall not relieve Consultant of its full obligations to City as provided by this Agreement. All such approved work performed by assignment or subletting shall be billed through Consultant, and there shall be no third party billing.

12.3 **Attorney's Fees** – If either party files any action or brings any proceeding against

the other arising from this Agreement, then as between City and Consultant, the prevailing party shall be entitled to recover as an element of its costs of suit, and not as damages, reasonable and necessary attorneys' fees and litigation expenses both at trial and on appeal, subject to the limitations set forth in TEX. LOC. GOV'T CODE § 271.153, as it exists or may be amended, if applicable.

12.4 **Successors and Assigns** – City and Consultant, and their respective partners, assigns, successors, subcontractors, executors, officers, agents, employees, representatives and administrators are hereby bound to the terms and conditions of this Agreement.

12.5 **Savings/Severability** – In the event of a term, condition, or provision of this Agreement is determined to be invalid, illegal, void, unenforceable, or unlawful by a court of competent jurisdiction, then that term, condition, or provision, shall be deleted and the remainder of the Agreement shall remain in full force and effect as if such invalid, illegal, void, unenforceable or unlawful provision had never been contained in this Agreement.

12.6 **Governing Law/Venue** – This Agreement shall be governed by and construed in accordance with the laws of the State of Texas, without regard to conflict of law principles. The exclusive venue for any action arising out of this Agreement shall be a court of appropriate jurisdiction in Grayson County, Texas.

12.7 **Execution/Consideration** – This Agreement is executed by the parties hereto without coercion or duress for any substantial consideration, the sufficiency of which is forever confessed.

12.8 **Authority** – The individuals executing this Agreement on behalf of the respective parties below represent to each other that all appropriate and necessary action has been taken to authorize the individual who is executing this Agreement to do so for and on behalf of the party for which his or her signature appears, that there are no other parties or entities required to execute this Agreement in order for the same to be an authorized and binding agreement on the other party for whom the individual is signing this Agreement and that each individual affixing his or her signature hereto is authorized to do so, and such authorization is valid and effective on the date hereof.

12.9 **Waiver** – Waiver by either party of any breach of this Agreement, or the failure of either party to enforce any of the provisions of this Agreement, at any time, shall not in any way affect, limit, or waive such party's right thereafter to enforce and compel strict compliance.

12.10 **Headings** – The headings of the various sections of this Agreement are included solely for convenience of reference and are not to be full or accurate descriptions of the content thereof.

12.11 **Multiple Counterparts** – This Agreement may be executed in a number of identical counterparts, each of which shall be deemed an original for all purposes. An electronic mail and/or facsimile signature will also be deemed to constitute an original if properly executed and delivered to the other party.

12.12 **Immunity** – It is expressly understood and agreed that, in the execution and performance of this Agreement, City has not waived, nor shall be deemed to have waived, any immunity, governmental, sovereign and/or official, or defense that is available to it against claims arising in the exercise of governmental powers and functions. By entering into this Agreement, the parties do not create any obligations, express or implied, other than those set forth in this Agreement.

12.13 **Incorporation of Recitals** – The representations, covenants and recitations set forth in the foregoing recitals of this Agreement are true and correct and are incorporated into the body of this Agreement and adopted as findings of City and the authorized representative of Consultant.

12.14 **Additional Representations** – Each signatory represents this Agreement has been read by the party for which this Agreement is executed and that such party has had the opportunity to confer with its counsel.

12.15 **Miscellaneous Drafting Provisions** – This Agreement shall be deemed drafted equally by all parties hereto. The language of all parts of this Agreement shall be construed as a whole according to its fair meaning, and any presumption or principle that the language herein is to be construed against any party shall not apply.

12.16 **No Third Party Beneficiaries** – Nothing in this Agreement shall be construed to create any right in any third party not a signatory to this Agreement, and the parties do not intend to create any third party beneficiaries by entering into this Agreement.

12.17 **Indemnity** – The parties agree that the Indemnity provision set forth in Article 10 of this Agreement is conspicuous and the parties have read and understood the same.

12.18 **Representations** – All representations and covenants made by one party to the other in this Agreement or in any certificate or other instrument delivered by one party to the other under this Agreement shall be considered to have been relied upon by the other party and will survive the satisfaction of any fees under this Agreement, regardless of any investigation made by either party.

12.19 **Independent Contractor** – In performing this Agreement, Consultant shall act as an independent contractor with respect to City. In no event shall this Agreement be construed as establishing a partnership, joint venture or similar relationship

between the parties and nothing herein shall authorize either party to act as agent for the other. Consultant shall be liable for its own debts, obligations, acts and omissions, including the payment of all required withholding, social security and other taxes and benefits with respect to all of Consultant's officers, directors, partners, employees and representatives, who shall not be considered City employees and shall not be eligible for any employee benefit plan offered by City.

12.20 **Debarment/Suspension** – City is prohibited from making any award or permitting any award at any tier to any party which is debarred or suspended or otherwise excluded from or ineligible for participation in federal assistance programs under Executive Order 12549, Debarment and Suspension. City, Consultant and Consultant's subcontractors shall comply with federal and state regulations regarding debarment and suspension. Consultant shall include a statement of compliance with federal and state debarment and suspension regulations in all third-party agreements for work on the Project.

12.21 **Restrictions on Lobbying** – City and Consultant are prohibited from using funds awarded under the Agreement for lobbying purposes. Consultant shall include a statement of compliance with this provision in applicable procurement solicitations and third-Party agreements for work on the Project.

12.22 **Appropriation of Funds** – Funds are not presently budgeted for City's performance under this Agreement beyond the end of City's 2021-2022 fiscal year. City will give Consultant sixty (60) days' notice if funds for City's performance are not budgeted to continue beyond that time. City shall have no liability for payment of any money for services performed after the end of City's 2021-2022 fiscal year unless and until such funds are budgeted.

12.23 **Duty to Facilitate Compliance with Public Information Act** –

(a) The obligations in this provision apply if this Agreement (1) has a stated expenditure of at least $1 million in public funds for the purchase of goods or services by City; or (2) results in the expenditure of at least $1 million in public funds for the purchase of goods or services by City in a fiscal year of the City City Council.

(b) If this Agreement is described in subsection (a) above, Consultant shall comply with the following obligations, which are set forth in Subchapter J, Chapter 552, Texas Government Code:

(1) preserve all contracting information related to this Agreement as provided by the records retention requirements applicable to City for the duration of this Agreement;

(2) promptly provide to City any contracting information related to this

Agreement that is in the custody or possession of Consultant on request of City; and

(3) on completion of this Agreement, either: (1) provide at no cost to City all contracting information related to the contract that is in the custody or possession of Consultant; or (2) preserve the contracting information related to this Agreement as provided by the records retention requirements applicable to City.

(c) As used in this provision, the term "contracting information" shall have the same meaning as that term is defined in Section 552.003, Texas Government Code.

(d) The requirements of Subchapter J, Chapter 552, Texas Government Code, may apply to this Agreement and the Consultant agrees that this Agreement can be terminated if the Consultant knowingly or intentionally fails to comply with a requirement of that subchapter.

12.24 **Certifications Required by Texas Law** – In accordance with Chapter 2270 of the Texas Government Code (to the extent applicable), Consultant hereby certifies that Consultant does not boycott Israel and will not boycott Israel during the term of any contract with City, including during the term of this Agreement. In accordance with Chapter 809 of the Texas Government Code (to the extent applicable), Consultant hereby certifies that Consultant does not boycott energy companies and will not boycott energy companies during the term of any contract with City, including during the term of this Agreement. In accordance with Chapter 2274 of the Texas Government Code (to the extent applicable), Consultant hereby certifies that Consultant does not have a practice, policy, guidance or directive that discriminates against a firearm entity or firearm trade association and will not discriminate against a firearm entity or firearm trade association during the term of any contract with City, including during the term of this Agreement. The foregoing terms in this Section have the meanings ascribed to them in the referenced statutes if defined therein.

12.25 **Reference to Consultant** – When referring to "Consultant," this Agreement shall refer to and be binding upon Consultant, and its officers, directors, partners, employees, representatives, contractors, subcontractors, licensees, invitees, agents, successors, assignees (as authorized herein), vendors, grantees, trustees, legal representatives and/or any other third parties for whom Consultant is legally responsible.

12.26 **Reference to City** – When referring to "City," this Agreement shall refer to and be binding upon City, its Council members, officers, agents, representatives, employees and/or any other authorized third parties for whom City is legally responsible.

IN WITNESS WHEREOF, the parties have executed this Agreement and caused this Agreement to be effective on the date set forth in the introductory clause of this Agreement.

CITY:
City of Sherman, Texas,
a Texas home-rule municipality

By: _____
Robby Hefton, City Manager

CONSULTANT:
Freese and Nichols, Inc.
a Texas corporation

By: _____
Clayton C. Barnard, PE,
Principal/ Vice President

APPROVED AS TO FORM:

_____
Abernathy, Roeder, Boyd & Hullett, P.C.
Ryan D. Pittman, City Attorneys

STATE OF TEXAS §
§
COUNTY OF GRAYSON §

BEFORE ME, THE UNDERSIGNED AUTHORITY, ON THIS DAY PERSONALLY APPEARED **ROBBY HEFTON**, KNOWN TO ME TO BE ONE OF THE PERSONS WHOSE NAMES ARE SUBSCRIBED TO THE FOREGOING INSTRUMENT; HE ACKNOWLEDGED TO ME THAT HE IS THE CITY MANAGER AND DULY AUTHORIZED REPRESENTATIVE FOR THE **CITY OF SHERMAN, TEXAS**, A TEXAS HOME-RULE MUNICIPALITY, AND THAT HE EXECUTED SAID INSTRUMENT FOR THE PURPOSES AND CONSIDERATION THEREIN EXPRESSED.

GIVEN UNDER MY HAND AND SEAL OF OFFICE THIS 5th DAY OF April 2022.

LINDA ASHBY
NOTARY PUBLIC
STATE OF TEXAS
ID # 382275-0
My Comm. Expires 06-06-2022

Linda Ashby
NOTARY PUBLIC IN AND FOR THE STATE OF TEXAS
My commission expires: 6/6/2022

STATE OF TEXAS §
§
COUNTY OF Collin §

BEFORE ME, THE UNDERSIGNED AUTHORITY, ON THIS DAY PERSONALLY APPEARED **CLAYTON C. BARNARD**, KNOWN TO ME TO BE ONE OF THE PERSONS WHOSE NAMES ARE SUBSCRIBED TO THE FOREGOING INSTRUMENT; HE ACKNOWLEDGED TO ME THAT HE IS THE PRESIDENT AND DULY AUTHORIZED REPRESENTATIVE FOR **FREESE AND NICHOLS, INC**, AND THAT HE EXECUTED SAID INSTRUMENT FOR THE PURPOSES AND CONSIDERATION THEREIN EXPRESSED.

GIVEN UNDER MY HAND AND SEAL OF OFFICE THIS 1st DAY OF April 2022.

APRIL DENISE CRANE
Notary Public, State of Texas
Comm. Expires 02-02-2024
Notary ID 12300507-6

NOTARY PUBLIC IN AND FOR THE STATE OF TEXAS
My commission expires: 2/2/2024

I. PROJECT DESCRIPTION

The expansion of Texas Instruments production facilities within the Southwest section of the City is requiring several improvements to the water transmission system. This project will include the design of a 36" water transmission line from the Water Treatment Plant, located south of State Highway 691 along La Cima Road, to the proposed intersection of Shepherd Drive and Flanary Road, approximately 73,000-LF. The pipeline is anticipated to travel along Friendship Road , FM 1417 and Flanary Road. The final alignment will be established within the Conceptual Study. This project includes a transfer valve near the intersection of FM 1417 and Flanary Road that will lower the pressure from the Northwest Pressure Zone into the Southwest Pressure Zone. The transfer valve will be located within an underground precast vault with SCADA controls to allow for operation of the proposed Southwest Elevated Storage Tank.

This scope includes the conceptual alignment study, preliminary alignment design, intermediate design, final design, bid and construction phase services. The detailed pipeline designs will be based on the alignment selected during the alignment study phase. Topographic survey, easement documents and sub-surface utility engineering services will be based on the approved alignments and will be provided as Special Services.

The project will use the Construction Manager at Risk (CMAR) delivery method.

The City will procure a Program Manager that will act as the City's representative for the design of the project.

II. GENERAL REQUIREMENTS

A. Specific design requirements shall be obtained from the City of Sherman Engineering Design Standards. Consultant will establish and summarize design criteria. The design criteria will be reviewed by the City for approval prior to beginning design work.

B. Consultant shall coordinate with other engineering consultants, utility companies, franchise utilities, City of Sherman, pipeline companies, and any other entity which has facilities within or adjacent to the Project.

C. Each time the Consultant submits plans and/or specifications to City, two (2) half-sized (11"x17") copies (as well as PDF versions) of each shall be submitted, unless otherwise instructed. These shall be reviewed and checked by City and returned to Consultant for corrections. When the corrected copies of the plans and specifications are returned to City, the original and reviewed plans and specifications shall also be returned to City. All plans, specifications, documents, provisions, attachments, and correspondence provided in accordance with this contract shall be dated.

D. The Consultant shall submit a monthly report outlining, at a minimum, the work on the project which occurred the previous month, the work expected to be completed the following month, the next major project milestone, and any information needed from the City. The report is to be submitted with monthly invoice.

E. Communications and Reporting:

a. Attend a pre-design project kickoff meeting with City staff to confirm and clarify scope, understand City objectives, and ensure economical and functional designs meet City requirements.
b. Attend review meeting with the City at the end of each design phase.
c. Prepare and submit monthly invoices in the format acceptable to the City.
d. Prepare and submit monthly progress reports.
e. Prepare and submit baseline Project Schedule initially, Project Schedule updates, and updated Opinion of Probable Construction Cost with each plan submittal.
f. Coordinate with other agencies and entities as necessary for the design of the proposed infrastructure and provide and obtain information needed to prepare the design.
g. With respect to coordination with permitting authorities, Consultant shall communicate with permitting authorities such that their regulatory requirements are appropriately reflected in the designs. Consultant shall work with regulatory authorities to obtain approval of the designs and make changes necessary to meet their requirements.
h. Attend additional project coordination meetings up to twelve (12) meetings, if needed.

III. TASK SUMMARY, BASIC SERVICES

A. Task 1 – Conceptual Study Phase

a. Advise City as to the necessity of City's providing or obtaining data or services from others and assist City in connection with any such services. Collect and review existing data, reports, mapping, and records from City. Review documents associated with the Project. Provide analyses of City's requirements for the Project, including planning, survey, site evaluations and comparative studies of prospective alternatives.

b. Prepare a desktop route study for the pipelines. Obtain GIS mapping of the route corridors, where available. Up to three routes will be evaluated. Study shall include analysis of hydraulics, pump station and delivery point locations, construction costs, conflicts with existing infrastructure, land costs (to be coordinated between Consultant and City), environmental considerations, accessibility, proximity to power sources for transfer valve and permitting requirements. Study will include site visits to points of public access and area where potential environmental constraints are identified in the desktop route study. Furnish 11" x 17" map books at 1" = 400 feet scale

c. Prepare a Report containing recommended pipeline route, facility locations, and conceptual design criteria with appropriate exhibits to indicate the considerations involved and alternative solutions (where indicated) and setting forth Consultant's findings and recommendations with opinions of probable construction costs for the Project, which includes estimates of contingencies and allowances for charges of professionals and consultants. Environmental and archeological considerations will be outlined in the report for each route alternative. Estimates of the cost of land and rights-of-way, compensation for or damages to properties and interest and financing charges will be provided by Easement Acquisition Sub-Consultant, Consultant and City.

d. Furnish one (1) electronic copy of the memorandum and present and review it in person with the City and CMAR. Receive and address City's comments and issue the final memorandum.

B. **Task 2 – Preliminary Design Phase:** Based upon the desktop pipeline route study from the Study Phase, proceed with final pipeline alignment selection.

a. Provide GIS alignment to surveyor to prepare property boundary information in GIS format.

b. Obtain Right-of-Entry for field walk and special services access.

c. Consultant will review alignment in the field and make modifications to avoid conflicts and determine the final pipeline alignment. Final alignment will be based upon property considerations, constructability, hydraulics, pump station and delivery point locations, construction costs, conflicts with existing infrastructure, land costs, environmental considerations, accessibility, proximity to power sources for transfer valve and permitting requirements.

d. Consultant will meet with third party road and railroad authorities, utility owners, development review and approval departments, and other agencies having jurisdiction over alignment approval. Meetings will be to coordinate the third-party requirements and seek approval of the final alignment.

e. Consultant will gather mapping of existing utilities based on field information and surveys collected by the Consultant and from existing "Record Drawings" provided by the City of Sherman. Other utilities should be shown on the plans based on field information and surveys collected by the Consultant, utility locates requested by the Consultant, and any available "Record Drawings" that the Consultant can obtain from other utilities to assist in route selection and pipeline design.

f. Consultant will update GIS mapping based upon the field alignment selection and provide two (2) half-sized (11"x17") copies to City.

g. Consultant will have one review meeting to receive comments from City and finalize the pipeline alignment,

h. Consultant will update GIS Mapping and issue two (2) half-sized (11"x17") copies of final alignment map books to City and Surveyor.

C. Task 3 – Intermediate Design Plans (60%)

a. Coordinate with CMAR as required.

b. Prepare front end documents (using City's available standard documents), including bid documents, general conditions, special conditions for the construction and equipment packages. Meet with City to resolve review comments and revise documents accordingly.

c. Prepare applications for routine permits such as road and railroad crossing permits, and TCEQ Approval. Environmental and United States Army Corp of Engineers (USACE) permitting are included as Special Services. Preparation of applications and supporting documents for government grants or for planning advances is an Additional Service. City will pay all permit application fees.

d. Furnish such information and applications necessary to utility companies whose facilities may be affected, or services may be required for the Project. Provide site civil design of the transfer valve to support the electric utilities site requirements, including site grading, roads, underground duct banks, and equipment pads if necessary. Easements for utilities companies will be provided as a Special Service.

e. Prepare revised opinion of probable construction cost at the 60% submittal.

f. Prepare intermediate engineering review drawings that address all comments from the preliminary engineering review, including detailed construction-related notes. A general notes sheet(s), coordinate control sheet(s), proposed erosion control plan sheet(s), and detail sheet(s) will be required for all projects.

g. Utilize hydraulic model to evaluate Southwest Pressure Zone operations with the proposed EST and determine the instrumentation settings for the proposed transfer valve.

h. Provide engineering layouts, instrumentation, electrical, cross-sections, details and specifications associated with the transfer valve.

i. Prepare miscellaneous plan sheets, including cover sheet, index, general notes, project control (1"=100' scale, or as appropriate), and applicable City standard details.

j. Prepare Preliminary Project Manual, including Bid Form and Special Conditions and technical specifications.

k. Furnish City and CMAR two (2) half-sized (11"x17") and one (1) electronic copy of the Intermediate submittal for review and comment.

D. Task 4 – Final Design/Construction Plans (90%, 100%)

a. Coordinate with CMAR as required.

b. Finalize miscellaneous plan sheets, including cover sheet, index, general notes, project control (1"=100' scale, or as appropriate), and applicable City standard details.

c. 60% Documents: Prepare drawings, specification table of contents, construction contract documents, designs, and layouts of improvements to be constructed. Furnish City two (2) half-sized (11"x17") sets and one (1) electronic copy of drawings and specification table of contents marked "Preliminary" for approval by City. Consultant will meet with the City/CMAR to present the plans and specifications and receive comments. Review documents will include plan and profile sheets, pipeline appurtenances, and typical details. Consultant will receive comments from City and CMAR and address comments in the 90% Review.

d. 90% Documents: Furnish one (1) electronic copy of drawings, specifications, and bid forms marked "Preliminary" for approval by City. Consultant will meet with the City/CMAR to present the plans and specifications and receive comments. Review documents will include all plans and specifications with minor corrections and notes remaining. Consultant will receive comments from Owner and CMAR and address comments in the 100% documents. Upon final approval by City, Consultant will provide two (2) half-sized (11"x17") and one (1) electronic copy of "Final" plans and specifications.

e. 100% Documents: Furnish one (1) electronic copy of drawings, specifications, and bid forms marked "Final" for approval by City. Consultant will meet with the City and CMAR to present the plans and specifications and receive comments. Review documents will include all final plans and specifications. Consultant will receive comments from City and CMAR and address comments in the Issued for Bid documents. Upon final approval by City, Consultant will provide City one (1) electronic copy of "Final" plans and specifications.

f. Prepare detailed opinion of probably construction cost based on current unit prices from the proposal of authorized construction, which shall include summaries of bid items and quantities on the unit price system of bidding, wherever practical.

g. When required by the nature of the project, the Consultant shall provide necessary exhibits and attend a public meeting with the City, up to (2) meetings.

h. Upon completion of the final design review, the Consultant shall furnish to the City up to four (4) additional half-sized (11"x17") copies and a pdf of the construction drawings to be forwarded to the utility companies.

i. Upon completion of the final design review, the Consultant shall furnish to the City, where required by the circumstances of the assignment, the engineering

data, construction plans, completed forms, and reports necessary for applications for routine permits by local, state, and federal authorities (as distinguished from detailed applications and supporting documents for government grants-in-aid or for planning advances not included in Basic Engineering Services).

E. Task 5 – Bid Phase Services

The CMAR will develop several work and material procurement packages to execute the project. It is anticipated there will be six (6) packages although the actual number may be different. The Consultant will be required to provide plans and specifications as well as general input into the development of these packages. These packages may be combined with other packages. Below is a list of anticipated packages:

- Pipe and Fitting Material Procurement Package
- Bedding Material Procurement Package
- Air Valve Procurement Package
- Main Line Valve Procurement Package
- Pipe Tunnel Construction Package
- Pipe Installation Construction Package

The services below apply to all bid packages.

a. Furnish to the City all necessary copies of approved Construction Contract Documents needed for competitive bidding (plans, specifications, notice to bidders, proposals, etc.). All sets of Construction Contract Documents in excess of eight (8) half-sized (11"x17") copies are to be paid for separately as provided hereinafter

b. Assist City/CMAR in securing bids. Provide a copy of the notice to bidders for City/CMAR to use in notifying construction news publications and publishing appropriate legal notice. The cost for publications shall be paid by City.

c. Assist Owner/CMAR by responding to questions and interpreting bid documents. Prepare and issue addenda to the bid documents if necessary.

d. Assist the City/CMAR in conducting pre-bid conferences for the construction projects and coordinate responses with Owner/CMAR. Response to the pre-bid conference will be in the form of addenda issued after the conference.

e. Prepare addenda as appropriate to interpret, clarify, or expand the Bid Documents.

f. Assist the City in the opening and tabulation of bids for construction of the Project.

g. Prepare a written summary of the bid tabulation and evaluation together with a letter addressing the award of the construction contract.

h. Assist in the preparation of formal Construction Contract Documents, provide

four (4) copies of contracts to be executed by the contractor, and coordinate their execution by the respective parties.

i. The Consultant shall not be required to guarantee the accuracy of the final design Cost of Construction, but may be required to provide additional services at no cost to the City if bids for the Project exceed the fixed budget limit for the Construction Cost as provided in Article 3.

F. Task 6 – Construction Administration Services

Upon completion of the bid or negotiation phase services, Consultant will proceed with the performance of construction phase services. Detailed daily construction inspection will be performed by as described within Special Services. Construction Administration services provided by Consultant will include the following:

a. Conformed Document submittal:
   i. Update the Bid Documents (plans and Project Manual) to incorporate bid addenda items
   ii. Print up to ten (10) sets 11"x17" plans and Project Manuals for issuance at the Pre-Construction Conference.
   iii. Package and submit CAD base files upon request.

b. Make monthly visits to the construction site over the construction period to observe progress of the work and consult with the City and the CMAR concerning problems and progress of the work. Twelve (12) site visits are planned for construction.

c. *Pre-Construction Meeting.* Assist the City in conducting the pre-construction conference. City shall prepare an agenda for the conference and prepare and distribute minutes. The pre-construction conference shall include a discussion of the Contractor's tentative schedules, procedures for transmittal and review of the Contractor's submittals, processing payment applications, critical work sequencing, change orders, record documents, and the Contractor's responsibilities for safety and first aid.

d. *Franchise Utility Coordination*. Assist the City with franchise utility coordination efforts and conflict resolution during construction.

e. *Requests for information*. Coordinate with Contractor and issue clarifications and interpretations of the Contract Documents to City as appropriate to the orderly completion of Contractor's work. Such clarifications and interpretations will be consistent with the intent of the Contract Documents. Field Orders authorizing variations from the requirements of the Contract Documents will be made by City.

f. *Change Orders*. Recommend Change Orders to City, as appropriate. Review and make recommendations related to Change Orders submitted or proposed by the Contractor. Task includes preparing plan sheet revisions.

g. *Shop Drawings, Samples, and Submittals.* Review and approve or take other

appropriate action in respect to Shop Drawings, Samples, Submittals and other data which Contractor is required to submit, but only for conformance with the information given in the Contract Documents and compatibility with the design concept of the completed Project as a functioning whole as indicated in the Contract Documents. Such review and approvals or other action will not extend to means, methods, techniques, equipment choice and usage, sequences, schedules, or procedures of construction or to related safety precautions and programs.

h. *Substitutes and "or-equal."* Evaluate and determine the acceptability of substitute or "or-equal" materials and equipment proposed by Contractor in accordance with the Contract Documents, but subject to the provisions of applicable standards of state or local government entities.

i. *Disagreements between City and Contractor.* As necessary, render written decision on all claims of City and Contractor relating to the acceptability of Contractor's work or the interpretation of the requirements of the Contract Documents pertaining to the progress of Contractor's work. In rendering such decisions, Consultant shall be fair and not show partiality to City or Contractor and shall not be liable in connection with any decision rendered in good faith in such capacity.

j. *Limitation of Responsibilities.* Consultant shall not be responsible for the acts or omissions of any Contractor, or of any of their subcontractors, suppliers, or of any other individual or entity performing or furnishing the Work. Consultant shall not have the authority or responsibility to stop the work of any Contractor.

G. Task 7 – Record Documents

a. Consultant shall prepare construction Record Documents based on the information received from Contractor within 30 days of final completion in accordance with the Agreement. Consultant shall submit one full size set and one pdf file of the Record Documents.

b. Provide GIS shape files of the record drawing alignment to the City.

IV. TASK SUMMARY, SPECIAL SERVICES

A. Task 8 – Topographical Survey

Consultant will subcontract with a surveying firm to provide surveying services for the project. The services listed below are based upon survey of up to 73,000 linear feet of pipeline from the Water Treatment Plant to the proposed intersection of Shepherd Drive and Flanary Road. A detailed scope of work is described below:

a. Ownership Data – Research property ownership of the affected parcels and obtain copies of deeds, subdivision plats, right-of-way maps and ownership

addresses along the route. Prepare a landowners Excel spreadsheet to include parcel number and landowner's name and address. Prepare a deed plot of all ownerships, subdivisions, and rights-of-way within one hundred feet either side of the proposed alignment. All properties shall be numbered to match the corresponding list of landowners in the Excel spreadsheet.

b. Ownership Map – Locate property corners of parcels that are affected by the proposed improvements. Calculate property lines, easement lines, and right-of-way lines of existing streets and utilities. A digital property map will be prepared showing lot numbers, property lines, right-of-way lines, existing easements, and ownership with recording information.

c. Existing Underground Utilities – Locate underground utilities horizontally with existing visible features and those marked by Texas811. Additional SUE services will be provided under Task 10.

d. Topographical/Design Survey – Gather design survey within along the final alignment as selected within Basic Services. The typical width of survey will be 100-ft along the proposed alignment. Survey will gather the locations of pavement edges, curb and gutter, driveways, culverts, fences and gates, walls, signs, mailboxes, tops and toes of slopes, spot elevations, trees six (6) inches and greater, surface locations of utilities and flowline of elevations of sanitary and storm sewer manholes where accessible, and other surface features as encountered. The digital survey drawing will be delivered in AutoCAD format showing visible surface features located, an ASCII point file, and a copy of field notes and field sketches.

e. Control Points – Establish project control at 1,000-ft intervals throughout the project area using Global Positioning System (GPS) methodology. Horizontal values will be based on the Texas State Plane Coordinate System, North American Datum of 1983 utilizing control monuments established withing the City of Sherman. This also includes refreshing and re-establishing benchmarks and reference points on NAD 93 CORDS Grid coordinate system for construction of the project, one time only.

f. Construction Staking – Staking of the Centerline of the proposed Project for utility coordination. The Consultant or its surveyor shall stake the centerline throughout the extent of the Project. The beginning and the end of the Project shall be designated. The points of intersection, points of curvature, and points of tangency of all horizontal curves shall be designated. Stations and half-stations (50-foot and 100-foot) shall be designated throughout the entire Project, on tangential and curvilinear portions. Said centerline control is to be established in a timely fashion as directed by City staff. Said centerline control markings are to be a one-time event and shall be of a nature to last a minimum of eight months.

B. Task 9 – Easement Documents

a. Prepare up to eighty-five (85) parcel maps and descriptions for permanent easements, signed and sealed by a Registered Professional Land Surveyor.

b. Prepare up to eighty-five (85) parcel maps and descriptions for temporary construction easement, signed and sealed by a Registered Professional Land Surveyor.

C. Task 10 – Subsurface Utility Engineering (SUE)

Consultant will subcontract with a SUE firm to provide the following SUE services:

a. SUE Quality Level B (QLB) – Designate horizontal location information along the final pipeline alignment within the right-of-way of major and minor road crossings. This information is obtained through the application and interpretation of appropriate non-destructive surface geophysical methods. A variety of electromagnetic equipment will be used to complete the process. Residential services and irrigation systems will not be mapped, commercial services will be mapped should they cross or parallel the alignment. Un-locatable lines will be depicted as per records from the utility if available.

b. SUE Quality Level A (QLA) – Provide QLA information for a total of thirty (30) test hole locations along various points throughout the pipeline alignment. QLA services will be in accordance with ASCE Publication CI/ASCE 38-02 (Standard Guideline for the Collection and Depiction of Existing Subsurface Utility Data). Subconsultant will excavate test holes by means of non-destructive vacuum excavation methods. Subconsultant will produce a summary sheet containing the coordinates and elevation to the top of the utility at each test hole location with test holes incorporated in the surveyor's topographic survey file.

D. Task 11 – Geotechnical Engineering

a. A geotechnical investigation will be performed to complete a Geotechnical Data Report (GDR) for the Project.

b. Geotechnical Investigation. The geotechnical investigation will include soil and rock exploration, laboratory testing, and related engineering analysis and reporting. The purpose of the geotechnical investigation will be to provide general understanding of the subsurface conditions along the proposed alignment and recommendations for pipe embedment and backfill, trenchless crossing construction methods, and recommendations for subgrade preparation and backfill associated with any required structures, such as the valve vault.
   i. A site visit will be performed to select and stake locations for the borings to be performed as a part of the geotechnical investigation after performing a desktop review of available geotechnical information, existing underground utilities, and accessibly to the boring locations. A geotechnical investigation plan will be prepared to finalize the scope and summarize the objectives of the geotechnical investigation to be performed under a subcontract. The

geotechnical investigation plan will include a boring location map that shows the borings to be performed along the proposed alignment.

ii. Right-of-way or other permits will be obtained from the City of Sherman, Grayson County and TxDOT prior to commencement of the field exploration activities. Traffic control devices will be provided if required. Clearing may be required for access to some of the boring locations that are away from paved areas.

iii. Up to sixty (60) borings will be performed, with depths ranging from 20-feet to 50-feet except for three borings that will have depths ranging from 70- to 80-feet should the pipeline be adjacent to bodies of water. The borings will be advanced using standard rotary drilling equipment with continuous flight augers or rotary wash methods. Subsurface samples will be collected using two (2) inch diameter split spoon sampling devices in conjunction with the standard penetration test (SPT) for non-cohesive soils and with three (3) inch diameter Shelby tube samples for cohesive soils. Where rock is encountered, the rock core will be collected using an NX or similar sized core barrel. Groundwater observations within the borings will be performed during drilling and after completion of drilling and sampling.

iv. Each boring will be logged by geotechnical engineers or geologists experienced with logging borings, directing field geotechnical investigations, and handling and transporting samples. Visual classification of the material will be performed during logging in general accordance with ASTM D2488.

v. Piezometers will be constructed in up to eight (8) of the borings to evaluate groundwater conditions for some of the trenchless crossings. Piezometers will be constructed and developed in accordance with the requirements of the Texas Department of Licensing and Regulation and reported to the State of Texas. Piezometers will remain in place through construction for use and monitoring by the contractor and ultimately will be removed and abandoned by the contractor. Four periodic site visits will be made after piezometer installation to record water level readings.

vi. Upon completion of the drilling and sampling the borings will be backfilled in accordance with requirements of the Texas Department of Licensing and Regulation. Any borings performed in paved areas will be patched with like material in accordance with applicable roadway standards after backfilling is performed. For borings performed in unpaved areas, the ground surface will be restored to the existing conditions.

vii. Laboratory testing will be performed on samples obtained from the borings to determine soil classification and pertinent engineering properties of such materials. Laboratory tests will be appropriately assigned for specific materials encountered during the geotechnical investigation are expected to include:

1. Atterberg Limits
2. Percent Passing No. 200 Sieve
3. Sieve Analysis (Gradation) with Hydrometer

4. Moisture Content
5. Dry Unit Weight
6. Unconfined Compressive Strength
7. Corrosivity Testing (electrical resistivity/conductivity, pH, and sulfate/chloride content)
8. Tensile Strength (Rock Only)
9. Slake Durability (Rock Only)
10. Cherchar Testing (Rock Only)
11. Miller Number Testing (Rock Only)

viii. A summary of the findings of the geotechnical investigation and recommendations will be provided in a Geotechnical Design Memorandum Report (GDM), which will include the elements listed below. The GDM will not be considered a contract document.

1. As-drilled boring location map, boring logs, laboratory test results, and a key to the symbols used.
2. Discussion of the surface and subsurface conditions and soil and rock properties indicated by the field observations and laboratory testing and implications for the design.
3. Groundwater level measurements from piezometers.
4. Pipeline backfill and embedment and other earthwork related recommendations for use during the design development.
5. Foundation design recommendations and considerations for structures associated with the pipeline.
6. General discussion of expected construction issues.

c. Geotechnical Data Report. A Geotechnical Data Report (GDR) will be prepared to summarize the findings and results of the geotechnical investigation and associated laboratory testing and provide only factual, objective information. The GDR will include a description of the geologic setting, description and discussion of the geotechnical investigation program, boring logs, test pits, and other related site investigations, a description and discussion of all field and laboratory testing, and results of such testing. The GDR is not to contain any conclusions or recommendations based on the data collected. The GDR will be considered a contract document.

E. Task 12 – Environmental Services

Data Compilation and Pedestrian Survey

a. Consultant's environmental scientists will compile existing study information and review pertinent data to the project area, such as soils maps, topographic maps, floodplain maps, National Wetland Inventory and National Hydrography Dataset information, to guide the pedestrian survey described below.

b. Consultant's environmental scientists will conduct a pedestrian survey along the chosen route alternative to document existing conditions of the alignment and

identify environmental constraints. This investigation will include the following:

i. Identification of "waters of the U.S." as defined by U.S. Army Corps Engineers (USACE) regulations. Waters of the U.S. are regulated by the USACE, and activities conducted within the jurisdictional boundaries of waters of the U.S require a permit under Section 404 of the Clean Water Act. FNI environmental scientists will document the presence of jurisdictional waters such as streams, wetlands, or open water bodies, and will GPS map the boundaries of these features. Wetlands will be delineated per the Corps of Engineers 1987 Wetlands Delineation Manual.

ii. Identification of potential habitat for any federally listed threatened or endangered species.

Environmental Permitting Memorandum

a. Consultant's environmental scientists will prepare a technical memorandum documenting the findings of the pedestrian survey, an estimate of potential impact to waters of the U.S., and a discussion of potential Section 404 permitting options.

b. This scope assumes that the proposed pipeline can be designed to meet the terms and conditions of Nationwide Permit (NWP) 58, Utility Line Activities for Water and Other Substances, without requiring the submittal of a pre-construction notification (PCN) to the USACE. In the event a PCN is required, consultant can prepare PCN as an additional service.

c. This scope assumes that mitigation services will not be required by the project since a PCN would be avoided. If mitigation services are required, they will be considered additional service.

d. All permit conditions and requirements will be included in the construction contract documents, and the construction contractor will be required to abide by these during construction.

e. Consultant will coordinate with the Project Team (City and Design Team) to discuss the findings of the site visit, potential ways to avoid PCN triggers, and comments to the draft technical memorandum.

F. Task 13 – Archeological Investigation Services

a. Archeology Field Survey and Reporting

i. Once a final alignment is chosen, subcontractor to the Consultant will prepare an Antiquities Permit application per the requirements of the Antiquities Code of Texas (ACT). This permit application package will include a summary of the known resources in the vicinity, the proposed field methods, and an application form. The application will be submitted to the City for their review, approval, and signature on the permit application form as a sponsor of the project prior to submittal. The fully signed permit application package will then be submitted to the THC for their review and

eventual permit issuance. Simultaneously with permit application preparation, make final arrangements for on-site survey.

b. Archeological Field Survey
   i. Once a permit has been issued and schedule allows, subconsultant's staff archeologists will travel to the survey area to conduct an archeological survey in accordance with the THC's minimum standards, including shovel testing and potentially required backhoe trenching. Observations will be recorded through notes, photographs, field forms, and with hand-held GPS. Any archeological sites observed within the survey tract will be documented in accordance with THC standards.

c. Draft Reporting
   i. After field investigations, subconsultant to prepare standard documentation for any archeological site(s) recorded. Prepare a comprehensive report that details project components, field methods and observations, recorded sites (if any), and regulatory recommendations for the proposed project. A draft will be electronically submitted to FNI and the City for review and comment, then (upon revision/approval) sent to the THC for their review under the ACT.

d. Curation and Final Report Preparation
   i. Upon THC approval (typically 30 days after receipt), subconsultant to prepare final reports in accordance with the Antiquities Permit requirements and the scope provided and submit all photographs, notes, and forms to a state approved curation facility for permanent curation.

G. Task 14 – Corrosion Engineering Services

a. Review site plans, proposed pipeline alignment and materials, foreign pipeline crossing, parallel piping systems and existing cathodic protection systems, electrical High Voltage (EHV) transmission lines, sources of stray DC current, topography and soil types and conditions.

b. Mobilization
   i. Conduct in-situ soil resistivity (75 locations) at depths of 20, 10, 5 and 2.5 feet via the Wenner 4-pin Method
   ii. Conduct stray current (DC) investigation in proposed alignment. The purpose of performing this investigation is to identify potential sources of stray current and nearby metallic pipelines that may be affected by the proposed cathodic protection system.

c. Review geotechnical report. Geotechnical group will be requested to test a minimum of 10 samples collected from the proposed pipeline depth for:
   i. As-received and saturated electrical resistivity per ASTM G-187 and pH as per ASTM G-51
   ii. Chemical analysis for major anions and cations as per ASTM 4327, ASTM 6919, and AWWA 41108

d. Analyze collected data and prepare a technical memorandum. The memorandum will include the collected field data and provide conclusions and recommendations for cathodic protection based on the soil conditions with respect to the proposed pipeline materials.

e. Provide Protection Design and Specifications at the 90 and 100% design submittals. All design work will apply to new construction only.

f. Participate in up to four (4) design review meetings.

g. Provide a cathodic protection opinion of probably construction cost.

H. Task 15 – Surge Protection Engineering Services

Consultant will prepare a hydraulic surge analysis of the proposed 36-inch pipeline.

a. Collect Data: Engineer will review proposed pipeline alignment sheets prepared for the 36-inch pipeline from the Water Treatment Plant High Service Pump Station. Such data will be reviewed, evaluated, and formatted, as needed, for input to simulation model building. Engineer will review and verify completeness and consistency of pipeline alignment sheet data and record data to ensure that it represents the current design, including pipeline elevation profile, pipeline materials, design pressure, and locations and size of combination air and vacuum valves.

b. Building of Synergi Pipeline Simulator (SPS) model for the system: Consultant will build the surge analysis computer model using Synergi Pipeline Simulator (SPS) Version 10.4. Model will include the proposed 36-inch pipeline elevation profile, High Service Pump Station pumps, valves, and piping, and locations and sizes of combination air and vacuum valves. The SPS computer model will be calibrated to meet the steady state flow operating conditions established for the system, with target pressures and flowrates based on design parameters. The surge model will include appropriate boundary conditions for characterizing the upstream supply and the downstream delivery.

c. Transient Case Simulations based on 60 Design Drawings: Consultant will model up to two (2) hydraulic transient scenarios including:
   i. Power failure at the High Service Pump Station to the 36-inch pipeline in service. All pumps trip simultaneously.
   ii. Transfer valve closure.

d. Base Case Simulations for 60% design plans – The above transient cases shall be simulated for base case conditions as determined for the designed rate of flow. All surge protection devices shall be included in analysis.

e. Surge Resolution Simulations for 60% design plans – If either the maximum allowable surge pressures or the worst-case allowable vacuum conditions are violated under the above simulated transient scenarios, then additional surge protection devices will be size and added to the model, and the simulations will be re-run to meet the desired conditions.

f. Technical Memorandum Preparation: Review and interpret results of computer simulations and provide a technical memorandum with graphs and plots of simulation results. The draft technical memorandum will be submitted for review and comments. A meeting or phone conference will be scheduled to review and discuss comments. A final technical memorandum will be issued that includes the resolution of comments. The final approved recommendations for the transient study will be incorporated into the final design of the Secondary Raw Water Line by the design engineers.

I. Task 16 – Easement Acquisition Services

a. Right-of-Entry and Easement Acquisition Services will be performed for a maximum of 85 easements.

b. Pre-Acquisition Services
   i. Confirm ownership and easement information.
   ii. Attendance of public information meetings, project design meetings, route development field visits by land manager.

c. Title/Curative Services
   i. Review preliminary title commitment for properties where permanent easements are to be obtained or preliminary title search information for properties where temporary easements are to be obtained.
   ii. Secure title commitments and updates in accordance with insurance rules and requirements for parcel payment submissions for properties which will be acquired in fee simple and for permanent easements.
   iii. Secure title insurance for all permanents easements. Cure all exceptions on Schedule C, when applicable. Written approval by the City will be required for any exceptions to coverage.

d. Right-of-Entry
   i. Prepare Right-of-Entry packets to include Landowner Bill of Rights, maps and paperwork to be executed.
   ii. The agent will initiate and participate in landowner meetings for ROE documents.
   iii. Upload Right-of-Entry executed documents to central location for access by City, its agents and employees.

e. Negotiation Services
   i. Determine values for TCE's based on the Tax Appraisal Value x 10% with negotiations up to Tax Appraisal Value x 1.5 x 10%. In this scenario, a floor for a minimum amount to be offered of $500.00 will be used. If TCE's cannot be acquired using this method within 30 days of the initial offer letter, an appraisal will be ordered by the City.
   ii. Request Appraisals to be ordered for all permanent offers.
   iii. Prepare the initial offer letter and any other documents required or requested by the City in an acceptable form.

iv. Contact each property owner or owner's designated representative and present the written offer in person where practical. When owners do not wish to have offers delivered in person, they will be mailed via certified mail with return receipt for documentation of delivery/receipt. Maintain follow-up contacts and secure the necessary instruments upon acceptance of the offer for the closing.
v. Provide a copy of the appraisal report for the subject property exclusively to the property owner or authorized representative at the time of the offer for permanent easements.
vi. Provide a compensation summary to the property owner or authorized representative at the time of the offer for temporary easements.
vii. Respond to property owner inquiries verbally and/or in writing within two business days.
viii. Prepare a separate negotiator contact report for each parcel file for each contact.
ix. Maintain parcel files of original documentation related to the purchase of the real property or property interests/acquisition of the Easement.
x. Present counteroffers in a form as directed by the City. Transmit any written counteroffer from property owners including supporting documentation, and Agent's recommendation with regard to the counteroffer.
xi. Prepare Final Offer letter, as necessary. Appraisals will be done by the City's chosen appraiser for Temporary Construction Easements prior to Final Offer letters.

f. Acquisition/Closing Services
i. Prepare check request, review closing documents facilitate execution of all necessary documents. Attend closings and provide closing services in conjunction with Title Company for all permanent easements.
ii. Transport any documents to City and landowner for signatures for all temporary easements.
iii. Record or cause to be recorded all original instruments immediately after closing at the respective County Clerk's Office.
iv. Review Title Policy and give to City for permanent storage.

g. Project/Document Administration
i. Maintain current status reports of all parcel and project activities and provide monthly or as requested to the City.
ii. Participate in project review meetings as requested.
iii. Provide copies of all incoming and outgoing correspondence as generated if requested.
iv. Maintain copies of all correspondence and contacts with property owners.
v. Update database with current status information and documentation.

h. Initiate and coordinate appraisal with City approved appraisers
i. Secure written permission from owner to enter the property from which land is to be acquired. Maintain permission letters with appraisal reports.

ii. Prepare and conduct personal pre-appraisal contact with interest owner(s) for each parcel wherein an appraisal is needed.
iii. Contact property owners or their designated representative to offer opportunity to accompany the appraiser on the appraiser's inspection of subject property. Maintain record of contact in file.
iv. All completed appraisals will be administratively reviewed and approved by the City.

i. Condemnation Support
   i. Condemnation support by the land acquisition agent (sub-consultant) will be limited to 25% of the total easements on the project.
   ii. Upon receipt of a copy of the final offer, research and produce an updated "Condemnation Limited Title Report" (search parameters set by City and/or outside legal counsel).
   iii. Prepare a condemnation package as directed by the City and deliver the package to the City's designee or legal counsel.
   iv. Upon notification from the City request the update of appraisal.
   v. Appear as Expert Witness as requested.

j. Expert testimony is limited to Sub-consultant. Expert Testimony by Consultant will be an additional service.

J. Task 17 – Construction Management Services

The duties, responsibilities and limitations of the authority of the on-site Construction Manager (CM) is as follows:

a. CM will be City's agent at the site and will act as directed by and under the supervision of City and Consultant. The CM will confer with City regarding CM's actions. CM's dealings in matters pertaining to the on-site work will in general be with City, Consultant, and Contractor. CM's dealings with Subcontractors will only be through, or with full knowledge and approval of, Contractor. CM will generally communicate with City and Consultant on any project issues as needed.

b. Duties and Responsibilities of the CM:
   i. Conferences and Meetings: Facilitate meetings with Contractor, Consultant, and City, such as monthly progress meetings and other project related meetings, as requested.
   ii. Serve as City's and Consultant's liaison with Contractor, working principally through Contractor's project manager and superintendent. Assist in understanding the intent of contract documents and serve as Consultant's and City's representative with Contractor when Contractor's operations affect facility operations.
   iii. Shop Drawings and Samples:
      1. Using the FNiManager System, use and reference a digital copy of shop drawings and other submittals for use in the field to verify materials and

equipment conforms to approved submittals.

2. Advise City, Consultant, and Contractor of the commencement of any work requiring a shop drawing or submittal if the shop drawing or submittal has not yet been approved by City.

iv. Review of Work, Rejection of Defective Work, Inspections, and Tests:

1. Conduct on-site observations of the work in progress to determine if the work is in general conformance with the contract documents.
2. Report to City and Consultant whenever it appears observed work will not produce a completed Project which conforms generally to the contract documents or will jeopardize the integrity of the design concept of the completed Project as a functioning whole as indicated in the contract documents, or has been damaged, or does not meet the requirements of any inspection, test or approval required to be made. Advise City and Consultant of work which should be corrected or rejected or should be uncovered for observation, or requires special testing, inspection or approval.
3. Provide visual and magnetic particle inspections on pipe welds. Inspection services will be provided by a Certified Welding Inspector (CWI). CWI will be on-site more often at the first of the project to verify and inspect contractor prove-out and beginning of pipe welding operations and will reduce the trips per week, as directed by CM or the City, after prove-out is completed. 1,900 joints are anticipated for inspection.
4. Verify tests, equipment, system start-ups, and operating and maintenance training are conducted in the presence of appropriate City and Consultant personnel; verify the Contractor maintains adequate records thereof; and observe record and report to City and Consultant appropriate details relative to the test procedures and start-ups. Use the FNiManager System for reporting.
5. Consult with City and Consultant in advance of scheduled major tests, inspections, and start of important phases of the work.
6. Review concrete and soil test reports and upload reports to FNiManager. Notify Consultant and City for results not in compliance with the contract documents.
7. Accompany visiting inspectors representing public or other agencies having jurisdiction over the Project, record the results of these inspections, and report to City and Consultant.
8. Observe whether Contractor has performed inspections required by laws, regulations, ordinances, codes, and orders applicable to the work, including but not limited to those to be performed by public agencies having jurisdiction over the work.

v. Reports:

1. Using the FniManager System, furnish Daily Construction Reports documenting progress of the work and of Contractor's compliance with

the progress schedule.

2. Report immediately to City and Consultant the occurrence of any accident.
3. CM will provide a monthly summary report to accompany the pay request submittal to the City and Consultant detailing the project budget status including change orders along with schedule updates.

vi. Payment Requests: Review Contractor prepared applications for payment. Verify quantities and stored materials with Contractor and report agreed upon quantities to City and Consultant.

vii. Completion:

1. Attend a preliminary inspection, in the company of City, Consultant, and Contractor and assist in preparation of a list of items to be completed or corrected.
2. Attend a final inspection, in the company of City, Consultant, and Contractor and assist in preparation of a final list of items to be completed or corrected.
3. Observe whether all items on the final punch list have been completed or corrected and make recommendations to City concerning acceptance and Final Completion/Payment.

viii. Limitations of Authority of CM:

1. CM will note time on each project to ensure proper tracking of effort.
2. Will not authorize any deviation from the contract documents or substitution of materials or equipment (including "or-equal" items), unless authorized by City and Consultant via change order, field order, or other written authorization for or-equal items.
3. Will not exceed limitations of Consultant's authority as set forth in Agreement or the contract documents.
4. Will not undertake any of the responsibilities of Contractor, Subcontractor, Suppliers, or Superintendent. Contractor will retain responsibility for construction quality.
5. During construction, the CM will work with the Contractor on field issues and discuss potential resolutions. However, the CM will not advise on, issue directions relative to, or assume control over any aspect of the means, methods, techniques, sequences or procedures of construction unless such advice or directions are specifically required by the contract documents.
6. The Contractor is responsible for the safety plan on-site. CM will not advise on, issue directions regarding, or assume control over safety precautions and programs in connection with the work or any activities or operations of City or Contractor.
7. Will not participate in specialized field or laboratory tests or inspections conducted by others, except as specifically authorized by City.

Consultant will provide CM services during the construction phase as indicated. The

level of effort for on-site CM coverage to fulfill the scope detailed above is estimated as:

- Full-time CM Services at 50 hours per week for 12 months – not to exceed 2,600 hours
- Part-time CM Services at 24 hours per week for construction start up and completion, assumed for 2 months – not to exceed 208 hours
- Senior CM Services at an average of 16 hours per month – not to exceed 340 hours

V. ITEMS NOT INCLUDED IN THE EXISTING SCOPE OF SERVICES

A. **Additional Services not included in the existing Scope of Services** – City and Consultant agree the following services are beyond the Scope of Services described in the tasks above. However, Consultant can provide these services, if needed, upon the City's written request. Any additional amounts paid to the Consultant as a result of any material change to the Scope of the Project shall be agreed upon in writing by both parties before the services are performed. These Additional Services include the following:

1. Scope of Services for the Project in Relation to Article 3, Section 3.1.4 of the Standard Form Agreement – Relating to the Project, the parties agree that at the time of the execution of the Agreement, the requirements of the Barriers Act are not applicable to the Scope of Services to be performed by Consultant under this Agreement.
2. Detailed construction staking.
3. Trench excavation safety plan.
4. Public Meetings, unless noted in the scope of services.
5. Tree Survey, unless noted in the scope of services.
6. Storm Water Pollution Prevention Plans.
7. Section 10 Permitting with the USACE.
8. Preparation of a formal written request for USACE authorization under a letter of permission procedure.
9. Preparation of a standard individual Section 404 permit application.
10. Preparation of Environmental Information Document, Environmental Assessment, or an Environmental Impact Statement.
11. Meetings or consultation with the USACE or other resource agencies, except as specifically noted in the scope of services.
12. Additional field investigations or analysis required to respond to public or regulatory agency comments.
13. Expert representation at legal proceedings or at contested hearings.
14. Mitigation monitoring if required by permit conditions.

EXHIBIT B
PROJECT DESIGN BUDGET SUMMARY

I. Basic Services

A. Conceptual Study (Expected Completion: May 2022)	**$344,600**
B. Preliminary Design (30%) (Expected Completion: June 2022)	**$387,150**
C. Intermediate Design (60%) (Expected Completion: August 2022)	**$747,950**
D. Final Design (90%, 100%) (Expected Completion: December 2022)	**$1,181,600**
E. Bid Phase Services (Expected Completion: March 2023)	**$108,600**
F. Construction Administration (Expected Completion: April 2024)	**$401,200**
G. Record Drawings (Expected Completion: May 2024)	**$46,250**
Total Basic Services (Lump Sum)	***$3,217,350***

II. Special Services

A. Topographic Surveying (Expected Completion: June 2022)	**$355,650**
B. Easement Documents (Expected Completion: July 2022)	**$199,625**
C. Subsurface Utility Engineering (Expected Completion: October 2022)	**$107,225**
D. Geotechnical Engineering (Expected Completion: September 2022)	**$361,700**
E. Environmental Services (Expected Completion: June 2022)	**$41,400**
F. Archeological Investigation Services (Expected Completion: June 2022)	**$52,100**
G. Corrosion Engineering Services (Expected Completion: October 2022)	**$86,650**
H. Surge Protection Engineering Services (Expected Completion: November 2022)	**$103,700**
I. Easement Acquisition Services (Expected Completion: February 2023)	**$887,150**
J. Construction Management Services (Expected Completion: April 2024)	**$661,000**
Total Authorized Special Services	***$2,856,200***
Project Budget, Grand Total (Not-To-Exceed)	***$6,073,550***

1. Files shall done in DWG/DXF format.

2. Files shall be georeferenced in the State Plane, Texas North Central FIPS 4202 (feet) coordinate system, using a datum of NAD 83 Grid.

3. If a surface adjustment factor is applied to the data, any surface adjustment factors used should be clearly documented on the drawing.

4. If submissions for the Project relate to a plat, the file submitted must match exactly the plat that is submitted for recording.

5. The file shall contain required features for the project type as detailed below:

    a. Pre-Construction/As-Built Plans and/or Record Documents:
        i. Layers from Final Plat Requirements as Applicable to Project Type.
        ii. Water Utility Features.
        iii. Sanitary Sewer Features.
        iv. Storm Sewer Features.

6. Each required feature group should be provided as a separate layer within the file.

7. Layer names should be representative of the information contained in the layer.

8. Line work should be done per accepted industry norms.

9. Text should not be smaller than 0.08" on a full size sheet, and should be a font such at Simplex, Calibri, or Arial.

EXHIBIT D
CONSULTANT'S GUIDELINES FOR DIRECT EXPENSES; GENERAL AND ADMINISTRATIVE MARKUP; TRAVEL AND SUBSISTENCE EXPENSES

I. **CONSULTANT'S RESPONSIBILITY**. Consultant shall be solely responsible for the auditing and accuracy of all Direct Expenses, approved markup (general and/or administrative), and approved travel and/or subsistence charges, including those of its subcontractors, prior to submitting to City for reimbursement. Any over-payment by City for errors in submittals for reimbursement may be deducted from Consultant's subsequent payment(s) for services; however, this shall not be City's sole and exclusive remedy for said over-payment.

II. **GUIDELINES FOR DIRECT EXPENSES**.

A. **Local Transportation** – Transportation in connection with the Project, when such transportation is not a function of routine performance of the duties of Consultant in connection with the Project, and when such transportation exceeds beyond fifty (50) miles from the Project site, shall be reimbursed at a standard mileage rate consistent with that as issued, and periodically revised, by the United States Internal Revenue Service (IRS). Under no circumstances shall City reimburse Consultant at a higher standard mileage rate or pay additional markup on charges for local transportation. Completion of City's Standard Mileage Log is required for submittal of these charges for reimbursement, including justification for each submitted expense.

Under no circumstances are charges associated with rental cars for local transportation eligible for reimbursement by City. Toll road subscriptions or toll plaza receipts are not reimbursable. Consultant agrees to place these standards in all subcontracts for work on the Project.

B. **Supplies, Material, Equipment** – City shall reimburse the actual cost of other similar direct Project-related expenses, which are duly presented in advance and approved by City's Project Manager in writing.

C. **Commercial Reproduction** – City shall reimburse the actual cost of reproductions, specifically limited to progress prints prepared for presentation to City at each phase of progress, and final Construction Documents prepared for distribution at bidding phase, provided that Consultant has duly obtained at least three (3) quotations from commercial firms and has chosen the best value for City. Consultant shall provide such documentation to City for review prior to submitting these expenses for reimbursement. Consultant agrees to place these standards in all subcontracts for work on the Project.

D. **In-House Reproduction** – Consultant shall make arrangements with City for prior approval of in-house reproduction rates prior to submitting these expenses for reimbursement. City shall provide Consultant with a standard format for documenting these charges. Completion of City's reproduction log is required as

a prerequisite for payment, including the number or reproductions, the date, time, description, the approved standard rate, and a justification for each submitted expense for reimbursement. Consultant agrees to place these standards in all subcontracts for work on the Project.

E. **Commercial Plotting** – City shall reimburse the actual cost of plots, specifically limited to final documents, provided Consultant has duly obtained at least three (3) quotations from commercial firms and has chosen the best value for City. Consultant shall provide such documentation to City for review prior to submitting these expenses for reimbursement. Consultant agrees to place these standards in all subcontracts for work on the Project.

F. **In-House Plotting** – Consultant shall make arrangements with City for prior written approval of in-house plotting rates prior to submitting these charges for reimbursement. City shall provide Consultant with a standard format for documenting these charges. Completion of City's reproduction log is required as a prerequisite for payment, including the number of plots, the date, time, description, the approved standard rate, and a justification for each submitted charge for reimbursement.

G. **Communications** – Reimbursement for expenses relating to electronic communications shall be limited to long-distance telephone or fax toll charges specifically required in the discharge of professional responsibilities related to the Project. Telephone service charges including office or cellular phones, WATTS, or Metro line services or similar charges are not reimbursable.

H. **Postage, Mail, and Delivery Service** – City shall reimburse the actual cost of postage and delivery of Instruments of Service, provided Consultant duly considers all circumstances (including available time for assured delivery) of the required delivery and selects the best value for City, which may require comparison of delivery costs offered by three (3) or more sources or methods of delivery, which at a minimum shall include U.S. Mail. Courier service is acceptable only in circumstances requiring deadline-sensitive deliveries and not for the convenience of Consultant and/or Consultant's employees. Consultant agrees to place these standards in all subcontracts for work on the Project.

I. **Meals and Other Related Charges** – Meals or any other related expenses are not reimbursable unless incurred outside a fifty (50) mile radius of the Project, and then only reimbursable for the actual cost subject to compliance with City's currently adopted policy. Non-allowable costs include, but are not limited to, charges for entertainment, alcoholic beverages, and gratuities.

III. GUIDELINES FOR GENERAL AND ADMINISTRATIVE MARKUP.

A. **Requirement of Prior Approval** – Consultant may be allowed to charge a General and/or Administrative Markup on work completed if Consultant can clearly define to City specifically what costs are included in the markup calculation. To apply General and/or Administrative Markup, Consultant must also document to City what costs would be considered direct costs. City shall issue approval in writing to allow Consultant to charge General and/or Administrative Markup. City reserves the right to reject any and all requests for General and/or Administrative Markup.

IV. GUIDELINES FOR TRAVEL AND SUBSISTENCE EXPENSES.

A. **Requirement of Prior Approval** – City shall reimburse the actual cost of travel and/or subsistence expenses upon prior written approval by City's Project Manager.

B. **Adherence to Currently Adopted City Travel Policy** – Reimbursements shall be governed by the same travel policies provided for City employees according to current adopted policy. Prior to the event, Consultant shall request, and City's Project Manager shall provide the provisions and the restrictions that apply to out-of-town reimbursements.

EXHIBIT E
CONTRACTOR'S INSURANCE GUIDELINES

I. GENERAL INSURANCE REQUIREMENTS –

A. All policies shall name the City of Sherman, its officers, agents, representatives and employees as additional insured as to all applicable coverage with the exception of workers compensation insurance and professional liability insurance.

B. Such policies shall require the provision of written notice to City at least thirty (30) days prior to cancellation, non-renewal or material modification of any policies, evidenced by return receipt or United States Certified Mail.

C. Such policies shall provide for a waiver of subrogation against City for injuries, including death, property damage or any other loss to the extent the same is covered by the proceeds of the insurance.

II. INSURANCE COMPANY QUALIFICATION – All insurance companies providing the required insurance shall be authorized to transact business in the State of Texas, and shall have a minimum rating of "A" by A.M. Best's Key Rating Guide, or other equivalent rating service(s).

III. CERTIFICATE OF INSURANCE – A Certificate of Insurance and policy endorsement(s) evidencing the required insurance shall be submitted prior to execution of the Agreement. If the Agreement is renewed or extended by City, a Certificate of Insurance and policy endorsement(s) shall also be provided to City prior to the date the Agreement is renewed or extended.

IV. INSURANCE CHECKLIST – "X" means that the following coverage(s) is required for this Agreement.

		Coverage Required	Limits
_X_	1.	Worker's Compensation & Employer's Liability	▪ Statutory Limits of the State of Texas
_X_	2.	General Liability	▪ Minimum $1,000,000.00 each occurrence; ▪ Minimum $2,000,000.00 in the aggregate
___	3.	XCU Coverage	▪ Minimum $1,000,000.00 each occurrence; ▪ Minimum $2,000,000.00 in the aggregate

X	4.	Professional Liability	▪ Minimum $1,000,000.00 each claim; ▪ Minimum $2,000,000.00 in the aggregate
X	5.	Umbrella Coverage of Excess Liability Coverage	▪ An amount of $2,000,000.00 ▪ Minimum $2,000,000.00 in the aggregate

X 6. City and its officers, agents, representatives and employees named as additional insured on General Liability Policy, as provided above. This coverage is primary to all other coverage City may possess.

X 7. General Liability Insurance provides for a Waiver of Subrogation against the City for injuries, including death, property damage, or any other loss to the extent that same is covered by the proceeds of the insurance. All insurance policies that are required to name the City as an additional insured must be endorsed to read as primary and non-contributory coverage regardless of the application of other insurance.

X 8. Thirty (30) days' notice of cancellation, non-renewal, or material change required. The words "endeavor to" and "but failure" (to end of sentence) are to be eliminated from the Notice of Cancellation provision on standard ACORD certificates.

X 9. Insurance company has a minimum rating of "A" by A.M. Best's Key Rating Guide, or other equivalent rating service(s).

X 10. The Certificate of Insurance must state the project title and bid number.

___ 11. Other Insurance Requirements (State Below):

CONFLICT OF INTEREST QUESTIONNAIRE — FORM CIQ

For vendor doing business with local governmental entity

This questionnaire reflects changes made to the law by H.B. 23, 84th Leg., Regular Session.

This questionnaire is being filed in accordance with Chapter 176, Local Government Code, by a vendor who has a business relationship as defined by Section 176.001(1-a) with a local governmental entity and the vendor meets requirements under Section 176.006(a).

By law this questionnaire must be filed with the records administrator of the local governmental entity not later than the 7th business day after the date the vendor becomes aware of facts that require the statement to be filed. *See* Section 176.006(a-1), Local Government Code.

A vendor commits an offense if the vendor knowingly violates Section 176.006, Local Government Code. An offense under this section is a misdemeanor.

OFFICE USE ONLY
Date Received

1 **Name of vendor who has a business relationship with local governmental entity.**

N/A

2 ☐ **Check this box if you are filing an update to a previously filed questionnaire.** (The law requires that you file an updated completed questionnaire with the appropriate filing authority not later than the 7th business day after the date on which you became aware that the originally filed questionnaire was incomplete or inaccurate.)

3 **Name of local government officer about whom the information is being disclosed.**

N/A
Name of Officer

4 **Describe each employment or other business relationship with the local government officer, or a family member of the officer, as described by Section 176.003(a)(2)(A). Also describe any family relationship with the local government officer. Complete subparts A and B for each employment or business relationship described. Attach additional pages to this Form CIQ as necessary.**

A. Is the local government officer or a family member of the officer receiving or likely to receive taxable income, other than investment income, from the vendor?

☐ Yes ☐ No

B. Is the vendor receiving or likely to receive taxable income, other than investment income, from or at the direction of the local government officer or a family member of the officer AND the taxable income is not received from the local governmental entity?

☐ Yes ☐ No

5 **Describe each employment or business relationship that the vendor named in Section 1 maintains with a corporation or other business entity with respect to which the local government officer serves as an officer or director, or holds an ownership interest of one percent or more.**

6 ☐ Check this box if the vendor has given the local government officer or a family member of the officer one or more gifts as described in Section 176.003(a)(2)(B), excluding gifts described in Section 176.003(a-1).

7 Clayton C Barnard
Signature of vendor doing business with the governmental entity

4-1-2022
Date

Form provided by Texas Ethics Commission www.ethics.state.tx.us Revised 1/1/2021

RESOLUTION NO. 7075

A RESOLUTION OF THE CITY COUNCIL OF THE CITY OF SHERMAN, TEXAS, AUTHORIZING EXECUTION OF AMENDMENT NO. 1 TO THE PROFESSIONAL SERVICES AGREEMENT WITH FREESE AND NICHOLS, INC. FOR DESIGN OF THE NORTHWEST AND SOUTHWEST TRANSMISSION PIPELINE; FINDING AND DETERMINING THAT THE MEETING AT WHICH THIS RESOLUTION IS PASSED WAS NOTICED AND IS OPEN TO THE PUBLIC AS REQUIRED BY LAW.

BE IT RESOLVED BY THE CITY COUNCIL OF THE CITY OF SHERMAN, TEXAS:

SECTION 1. That the City Manager be and is hereby authorized and directed, subject to all contract documents being properly completed and approved as to form and content by the City Attorney, to execute Amendment No. 1 to the Professional Services Agreement with Freese and Nichols, Inc. for design of the Northwest and Southwest Transmission, in accordance with all contract documents attached hereto and made a part hereof for all purposes.

SECTION 2. That it is hereby officially found and determined that the meeting at which this resolution is passed is open to the public and that public notice of the time, place, and purpose of said meeting was given as required by law.

DULY PASSED AND APPROVED BY THE CITY COUNCIL OF THE CITY OF SHERMAN, TEXAS on this the 15th day of May 2023.

CITY OF SHERMAN, TEXAS

ATTEST:

BY: _____
LINDA ASHBY, CITY CLERK

BY: _____
DAVID PLYLER, MAYOR

APPROVED AS TO FORM AND CONTENT:
THE LAW FIRM OF ABERNATHY, ROEDER, BOYD & HULLETT, P.C.

BY: _____
RYAN D. PITTMAN, CITY ATTORNEY

AMENDMENT NO. 1

TO THE PROFESSIONAL SERVICES AGREEMENT FOR ENGINEERING DESIGN SERVICES BETWEEN THE CITY OF SHERMAN (OWNER) AND FREESE AND NICHOLS, INC. (ENGINEER) FOR THE NORTHWEST AND SOUTHWEST TRANSMISSION PIPELINE

Dated April 4, 2022 ("Original Agreement")

This Amendment No. 1 serves to increase the original contract fees of Six Million Seventy-Three Thousand Five Hundred and Fifty dollars ($6,073,550) by One Hundred and Forty Thousand Two Hundred and Ten dollars ($140,210) to a total amount of Six Million Two Hundred and Thirteen Thousand Seven Hundred and Sixty dollars ($6,213,760) based on the following **additional** work to the project scope:

1. Basic Services
    a. Final Design (90%, 100%), Bid Phase Services, Construction Administration Services, and Record Drawing Services
        i. Provide the above mentioned services as outlined in the original agreement for an additional 2,250 LF extending from the original project termination point at the intersection of Shepherd Drive and Flanary Road (Interurban Parkway) to a point approximately 600 LF east of the existing Shepherd Drive EST and connect to the existing 24-inch water line.

2. Special Services B – Easement Documents
    a. At the parcels where the alignment enters the Flanary Road (Interurban Parkway) alignment, acquire ROW for the full width of the road in lieu of water line easement. This will require additional field work to set corners for the proposed ROW.

3. Special Services E – Environmental Services
    a. Preparation and Submission of a Preconstruction Notification to the USACE
        i. Pre-Application Meeting with USACE
            1. FNI will prepare a letter to the USACE Tulsa District requesting a pre-application meeting. The letter will include a description of the project, its purpose and need, maps, and conceptual design drawings. FNI will coordinate and attend the pre-application meeting with the USACE and prepare meeting documentation. This scope assumes that the pre-application meeting will be held using the USACE's preferred virtual platform.
        ii. Delineation Report
            1. FNI will prepare a Delineation Report in accordance with USACE guidance to document potential waters of the U.S., including wetlands. The Delineation Report will include the required data forms and maps.
        iii. Prepare PCN
            1. FNI will prepare a PCN in accordance with the requirements of NWP General Condition 32.

2. A draft PCN will be prepared for the City's review and comment. The PCN will include the Delineation Report, USACE ENG Form 6082 application form, cultural resources information, federally listed threatened or endangered species information, and the required supporting documentation and engineering drawings depicting the proposed impacts to waters of the U.S. The final PCN will be prepared by incorporating the City's comments and will be submitted to the USACE Tulsa District.

iv. Address USACE Comments
    1. FNI will address up to two rounds of USACE comments/requests for additional information or clarification. Based on our review of available design information, permanent losses to WOTUS are not likely. If required, this scope assumes that mitigation will be covered by the purchase of mitigation bank credits; therefore, development of a mitigation plan is not included in this scope of services. FNI will coordinate with the mitigation bank and obtain a sales agreement for the purchase of credits, if required. Additional requests by the USACE for site visits, preparation of a compensatory mitigation plan, consultation with other resource agencies, or excessive request for additional information resulting in expenditures beyond FNI's project budget will be considered additional services.

v. USFWS Conference
    1. If required, FNI will participate in one conference call or virtual meeting with the U.S. Fish and Wildlife Service (USFWS) and the USACE to discuss NWP General Condition 18 requirements for federally listed threatened or endangered species. This scope does not include formal consultation under Section 7 of the Endangered Species Act.

vi. Project Team Coordination
    1. FNI scientists will coordinate with the project team (design team and City) on the findings of the delineation, assist with fill calculations, and provide permitting input into the design.

vii. Additional Permitting Site Visit for the Shepherd Drive EST
    1. If required, FNI will perform an additional pedestrian survey to document the conditions of potential WOTUS and federally listed threatened and endangered species habitat at the proposed Shepherd Dr Elevated Storage Tank (EST) site following development activities by other parties.

viii. Shepherd EST PCN
    1. If a PCN is required for the construction of the proposed Shepherd EST based on impacts to WOTUS, NWP General Condition 18, or NWP General Condition 20, FNI will prepare a PCN in accordance with the requirements of NWP General Condition 32. A draft PCN will be prepared for the City's review and comment. The PCN will include a Delineation Report, USACE ENG Form 6082 application form, cultural resources information, federally listed threatened or endangered species information, and the required supporting documentation and engineering drawings depicting the proposed

impacts to waters of the U.S. The final PCN will be prepared by incorporating the City's comments and will be submitted to the USACE Tulsa District.

b. Deliverables
   i. Request for Pre-application Meeting
   ii. Delineation Report
   iii. NWP PCN

c. Additional Services
   The following services are not included in the scope of work but can be provided upon written authorization by the Client:
   i. Preparation of a formal written request for USACE authorization under a letter of permission procedure.
   ii. Preparation of a standard individual Section 404 permit application.
   iii. Conduct tree survey and prepare permit application for compliance with City tree ordinance requirements.
   iv. Preparation of Environmental Information Document, Environmental Assessment, or an Environmental Impact Statement.
   v. Meetings or consultation with the USACE or other resource agencies, except as specifically noted in the scope of services.
   vi. Presence/absence surveys for state or federally listed threatened/endangered species.
   vii. Freshwater mussel surveys and reports.
   viii. Scour analysis and reports.
   ix. Geomorphic stream assessments and reports.
   x. Preparation of a mitigation plan to compensate for impacts to waters of the U.S.
   xi. Application to Texas Commission on Environmental Quality for individual 401 Water Quality Certification.
   xii. Additional field investigations or analysis required to respond to public or regulatory agency comments.
   xiii. Formal consultation with the U.S. Fish and Wildlife Service under Section 7 of the Endangered Species act.
   xiv. Conditional assessments of streams and wetlands following USACE methodology such as Texas Rapid Assessment Method (TXRAM).
   xv. Expert representation at legal proceedings or at contested hearings.
   xvi. Phase I/II Environmental Site Assessment

4. Special Services II – F – Archeological Investigation Services
   a. Archeology Field Survey and Reporting, Archeological Field Survey, Draft Reporting, Curation and Final Report Preparation
      i. Provide the above mentioned services as outlined in the original agreement for an additional 2,250 LF extending from the original project termination point at the intersection of Shepherd Drive and Flanary Road (Interurban Parkway) to a point approximately 600 LF east of the existing Shepherd Drive EST.

ii. Provide the above mentioned services as outlined in the original agreement for the 1.53 acre proposed Shepherd Drive EST site. This will be a separate investigation, survey, and report specific to the Shepherd EST site.

The contract amount under the Original Agreement shall be increased by a fee not to exceed the following amounts:

1. Basic Services (Lump Sum)
    a. Final Design (90% and 100%) $28,500
    b. Construction Administration..... $2,850
    c. Record Drawings $1,850

    Total Basic Services $33,200

2. Special Services (Not to Exceed)
    a. Easement Documents..... $15,410
    b. Environmental Services $67,500
    c. Archeological Investigation Services $24,100

    Total Special Services $107,010

TOTAL FEE INCREASE (NOT TO EXCEED): $140,210

ARTICLE III. TERM

1. No adjustment to project duration.

[Rest of page left intentionally blank]

This Amendment No. 1 shall be effective on the date it is executed by the last party to execute it. The OWNER and ENGINEER hereby agree to amend the Proposed Fees section of this Original Agreement to read as follows:

Proposed Fees

Engineer shall be compensated as follows:

1. Basic Services (Lump Sum)
   a. Conceptual Study $344,600
   b. Preliminary Design (30%) $387,150
   c. Intermediate Design (60%) $747,950
   d. Final Design (90% and 100%) **$1,210,100**
   e. Bid Phase Services $108,600
   f. Construction Administration **$404,050**
   g. Record Drawings **$48,100**

   Total Basic Services **$3,250,550**

2. Special Services (Not to Exceed)
   a. Topographic Surveying $355,650
   b. Easement Documents **$215,035**
   c. Subsurface Utility Engineering $107,225
   d. Geotechnical Engineering $361,700
   e. Environmental Services **$108,900**
   f. Archeological Investigation Services **$76,200**
   g. Corrosion Engineering Services $86,650
   h. Surge Protection Engineering Services $103,700
   i. Easement Acquisition Services $887,150
   j. Construction Management Services $661,000

   Total Special Services **$2,963,210**

CONTRACT TOTAL (NOT TO EXCEED): $6,213,760

[Rest of page left intentionally blank]

The parties hereby ratify and confirm all of the terms, provisions, covenants and conditions of the Original Agreement and acknowledge and agree that the Original Agreement remains in full force and effect, except as amended in this Amendment No. 1. To the extent that any provision contained herein conflicts with the Original Agreement, the provision contained herein shall supersede such conflicting provision contained in the Original Agreement. This Amendment No. 1 and the Original Agreement contain the entire agreement of the parties with respect to the matters contained herein. This Amendment No. 1 may not be modified or terminated except upon the provisions hereof or by the mutual written agreement of the Parties hereto.

[Rest of page left intentionally blank]

EXECUTED in three (3) counterparts (each of which is an original) on behalf of ENGINEER shown below, and on behalf of the OWNER by its City Manager (thereunto duly authorized) this 18 day of May ,2023.

OWNER:
CITY OF SHERMAN, TEXAS

Robby Hefton, City Manager

ENGINEER:
FREESE AND NICHOLS, INC.

Clayton C. Barnard, P.E., Principal

ATTEST:

Linda Ashby
City Clerk

ATTEST:

APPROVAL RECOMMENDED:

Wayne E. Lee, P.E., CFM / Director Engineering

APPROVED AS TO FORM:
THE LAW FIRM OF ABERNATHY, ROEDER, BOYD & HULLETT, P.C.

BY:

NAME: Ryan D. Pittman

CITY ATTORNEY

CORPORATE ACKNOWLEDGMENT

THE STATE OF TEXAS§
§
COUNTY OF Dallas **§**

BEFORE ME, the undersigned authority, a Notary Public in and for said County and State, on this day personally appeared Clayton Barnard of Freese and Nichols, Inc. known to me to be the person and officer whose name is subscribed to the foregoing instrument and acknowledged to me that the same was the act of the said Freese and Nichols, Inc., a corporation, that (s)he was duly authorized to perform the same by appropriate resolution of the board of directors of such corporation for the purposes and consideration therein expressed, and in the capacity therein stated.

GIVEN UNDER MY HAND AND SEAL OF OFFICE this the 10th day of May, A.D. 2023.

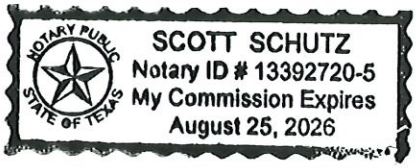

Notary Public In and For Dallas County, Texas

My Commission Expires:

8/25/2026

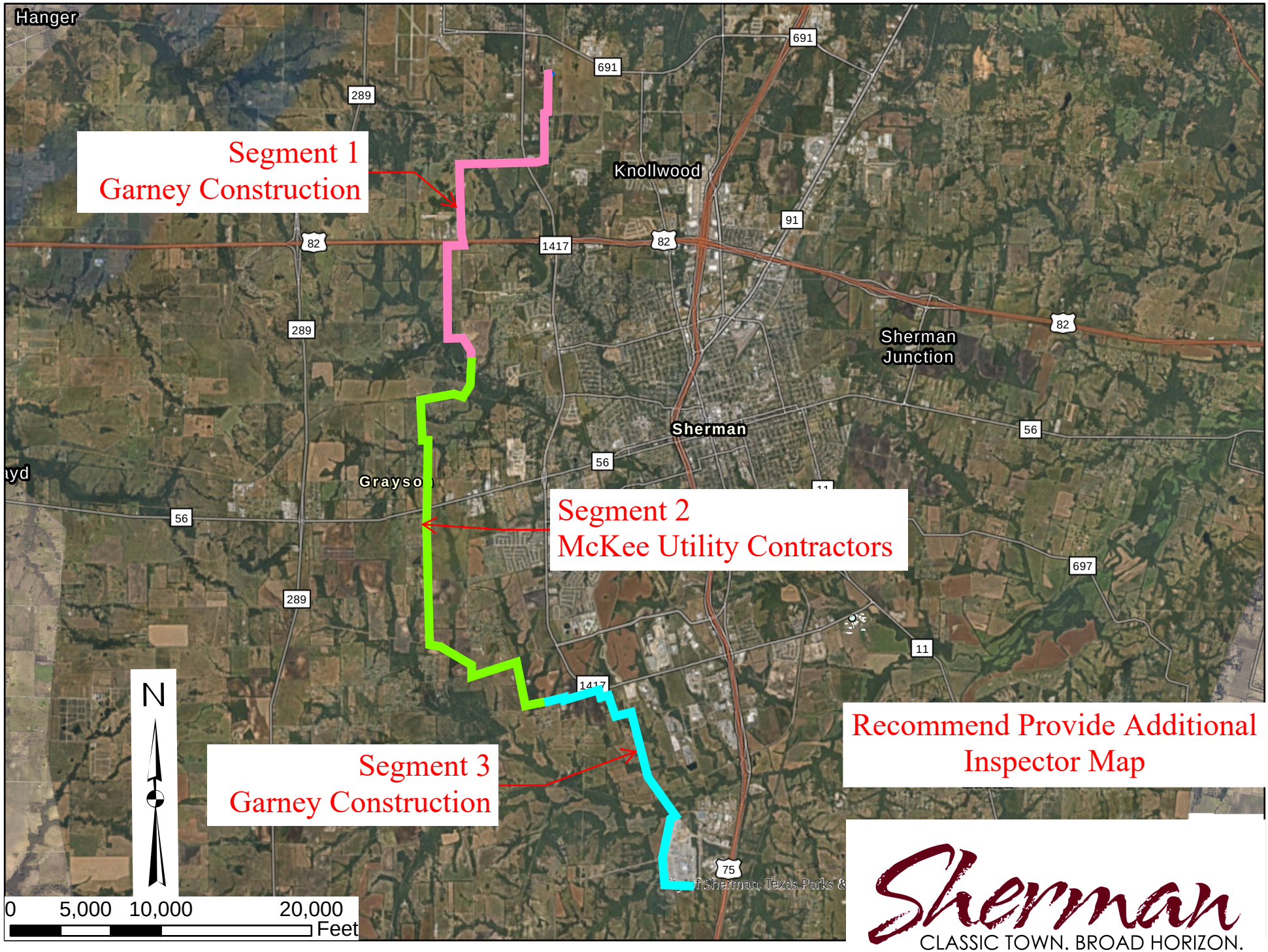
Hanger
691
691
289
Segment 1
Garney Construction
Knollwood
91
82
1417
82
289
82
Sherman
Junction
Sherman
56
56
Grayson
56
Segment 2
McKee Utility Contractors
697
289
11
1417
Segment 3
Garney Construction
75
N
0
5,000
10,000
20,000
Feet
Recommend Provide Additional
Inspector Map
Sherman
CLASSIC TOWN. BROAD HORIZON.

SHERMAN CITY COUNCIL
Agenda Communication Form

City Council Regular Meeting Agenda Item No. H.5.

Meeting Date: 4/15/2024

Prepared By: Tom Pruitt, Utility Engineer

Approved By: Robby Hefton, City Manager

Caption:

**** RESOLUTION NO. 7285***

Approving the Greater Texoma Utility Authority's Intention to Approve Amendment No. 6 to Kiewit Water Facilities South CO. for the South Wastewater Treatment Plant

Issue:

To consider approving the Greater Texoma Utility Authority's intention to approve Amendment No. 6 for the South Wastewater Treatment Plant

Background:

In a continued effort to provide expedited Wastewater Treatment Plant construction and moving closer to the guaranteed maximum price (GMP), the South Wastewater Treatment Plant Amendment 06 has three components.

- Item 1 - Early Works GMP Package J - Awarding Architectural Package J
- Item 2 - Potential Change Orders Impacting Early Works GMP Packages as follows:
  - PCO004 - Xylem SS Piping and RAS PS Mixers (Amending GMP Package C)
  - PCO005 - Rotary Lobe Pump Duty Point Change (Amending GMP Package C)
  - PCO006 - Veolia MBR Cover Material Change (Amending GMP Package C)
  - PCO007 - Submersible Pump Discharge Elbow Upsize (Amending GMP Package C)
  - PCO008 - Additional Survey Monuments (Amending GMP Package A)
  - PCO009 - Preconstruction Partnering Session (Amending Preconstruction Services)
  - PCO010 - Eaton Electrical Equipment (Amending GMP Package C)
- Item 3 - Owner's Contingency Allowance

The Program Management team has worked closely with the design engineer, construction manager, CMAR and City Staff to review each component of the proposed amendment listed and recommends approval of this amendment.

Origination:

Engineering Department

Financial Consideration:

Funds needed for this package is $13,945,682.58 and will be provided through the GTUA 2024 Open Market bonds.

Staff Recommendation:

It is recommended that the City Council approve GTUA’s intention to approve Amendment No. 6 for the South

Wastewater Treatment Plant.

Alternatives:
As may be directed by the City Council

Attachments:
1. Resolution No. 7285
2. Amendment No. 6 - Full Packet
3. Location Map

RESOLUTION NO. 7285

A RESOLUTION OF THE CITY COUNCIL OF THE CITY OF SHERMAN, TEXAS, APPROVING THE GREATER TEXOMA UTILITY AUTHORITY'S INTENTION TO AWARD AMENDMENT NO. 6 TO KIEWIT WATER FACILITIES SOUTH CO. FOR THE SOUTH WASTEWATER TREATMENT PLANT; FINDING AND DETERMINING THAT THE MEETING AT WHICH THIS RESOLUTION IS PASSED WAS NOTICED AND IS OPEN TO THE PUBLIC AS REQUIRED BY LAW.

BE IT RESOLVED BY THE CITY COUNCIL OF THE CITY OF SHERMAN, TEXAS:

SECTION 1. That the City of Sherman hereby approves the Greater Texoma Utility Authority's intention to award Amendment No. 6 to Kiewit Water Facilities South Co. in the amount of Thirteen Million Nine Hundred Forty-Five Thousand Six Hundred Eighty-Two Dollars and Fifty-Eight Cents ($13,945,682.58).

SECTION 2. That it is hereby officially found and determined that the meeting at which this resolution is passed is open to the public and that public notice of the time, place, and purpose of said meeting was given as required by law.

DULY PASSED AND APPROVED BY THE CITY COUNCIL OF THE CITY OF SHERMAN, TEXAS on this the 15th day of April 2024.

CITY OF SHERMAN, TEXAS

BY: _____
DAVID PLYLER, MAYOR

ATTEST:

BY:_____
LINDA ASHBY, CITY CLERK

APPROVED AS TO FORM AND CONTENT:
THE LAW FIRM OF ABERNATHY,
ROEDER, BOYD & HULLETT, P.C.

BY: _____
RYAN D. PITTMAN, CITY ATTORNEY

April 4, 2024

GTUA/City of Sherman
220 W Mulberry St.
P.O. Box 1106
Sherman, TX 75091
(903) 892-7208

Re: COSK South Wastewater Treatment Plant - MBR Project
Amendment 06 Recommendation

Dear GTUA/City of Sherman:

For the South Wastewater Treatment Plant – MBR Project, Amendment 06 has three components. Each is described herein with detail information attached. The Program Management team has worked closely with the design engineer, construction manager, CMAR and city staff to review each component of the proposed amendment listed below and recommends approval of this amendment. A summary table of the proposed amendment cost follows the Item descriptions.

Item 1 – Early Works GMP Package J - Architectural

GMP J – Architectural. This project was formally advertised on Civcast on February 11 and newspaper advertisements on February 18 and 25th. Bids were received and opened March 15th with one responsive bidder being Kiewit Water Facilities South Co. The Program Team recommends award of a bid to partially accomplish GMP J and the CMAR has provided a GMP submittal package for this work. The bid recommendation is to award the bid to Kiewit Water Facilities South Co. with a bid amount of $6,560,000.00. The GMP J package includes this amount as well as General Conditions costs, CMAR fee, Contingency, and CMAR staff needed to execute this early works package with a total amount of $10,144,164.15.

Item 2 - Potential Change Orders Impacting Early Works GMP Packages

Seven Potential Change Orders (PCO's) have been reviewed and recommended by the project team further described as:

- **PCO004 – Xylem SS Piping and RAS PS Mixers (GMP C).** After Equipment Package 04 was bid and awarded, it was determined by the design team that two additional submersible mixers were needed in the Return Activated Sludge Pump Station and that a change in scope of work to shift air piping from a future mechanical package to an equipment

vendor (Xylem) was needed. This PCO provides for both of these costs with a total lump sum of $77,829.70.

- **PCO005 – Rotary Lobe Pump Duty Point Change (GMP C).** After Equipment Package 04 was bid and awarded, it was determined by the design team that the pump duty point for sludge transfer pumps was inadequate to pump sludge to all areas of the plant requiring this transfer. The pump discharge head and flowrate needed to be increased. The equipment vendor of these 2 pumps, Vogelsang, was engaged to provide updated pricing. This PCO provides for this additional lump sum cost of $79,699.73.

- **PCO006 – Veolia MBR Cover material change (GMP C).** During the submittal review process for Equipment Package 01 MBR equipment, it was requested that the fiberglass reinforced plastic MBR basin unit covers originally bid be replaced with aluminum. The City operations staff reviewed the proposed changes and requested that for long term O&M, the Aluminum covers would provide a better value. This PCO provides for the differential cost addition to change the cover material and totals $127,743.32.

- **PCO007 – Submersible pump discharge elbow upsize (GMP C).** Because the South WWTP is being designed with multiple expansions planned in the near future, it was determined that in the future larger submersible pumps would be required in the influent pump station and the return activated sludge pump station. Since these two pump stations will be difficult to impossible to shut down in the future, the design team evaluated that it is in the City's best interest to provide the piping connections that would allow future pump changes without the need to change the pump's discharge elbows. This PCO provides the cost of these larger discharge elbows and transition couplings. Note that the total cost includes reductions in the original piping costs for these items. Also noted that during negotiations of this cost, the pump vendor offered a 15% reduction in the cost. The total cost of this PCO is $192,587.17

- **PCO008 – Additional Survey Monuments (GMP A).** During initial project layout, the CMAR determined that the survey monuments provided for in the contract would not be adequate to provide the appropriate level of survey control for construction. Additional monumentation was requested and the CMAR installed the monuments to design specifications. This PCO provides for the material and labor to install the additional monumentation for a total cost of $9,687.91.

- **PCO009 – Preconstruction Partnering Session (Preconstruction Services).** The original proposal request documentation included an item for the CMAR to host a Partnering Session with the project team during the preconstruction phase. This was discussed with the CMAR, Program Manager and City and it was determined that the project would benefit from a partnering session and the request was approved. The total cost of this PCO is $12,275.85.

- **PCO010 – Eaton Electrical Equipment (GMP C).** After Equipment package 02 was bid (Issued for Bid or IFB package advertised undertaken to expedite pre-procurement efforts) and awarded, the electrical system design was updated (Issued for Construction or IFC based on actual completed design) which resulted in the need to make several minor modifications to electrical equipment provided. This change provides the total lump sum cost increase for the additional equipment items of $147,743.82.

Item 3 – Owner's Contingency Allowance

All project components were procured prior to final design completion in order to provide completion before the required date. This means that design development may necessitate changes. In order to address these types of items, the Program Team recommends the authorization of adding an Owner's Contingency Allowance to the contract value in the amount of $3,153,958.93. Note that this is slightly more than 1% of the expected project value, but does not increase the estimated budget of $258,150,000.00.

Summary of Amendment 06 Costs

Amendment 06 Summary Table

Item No.	ID	Description	Net Change in Cost	Net Change in Time
1	GMP J	Architectural	$10,144,164.15	0
2	PCO 004	Xylem RAS and Air Piping	$ 77,829.70	0
	PCO 005	Rotary Lobe Pumps Duty Point	$ 79,699.73	0
	PCO 006	Veolia MBR Aluminum Covers	$ 127,743.32	0
	PCO 007	Submersible Pump Dischare Elbows	$ 192,587.17	0
	PCO 008	Survey Monumentation Addition	$ 9,687.91	0
	PCO 009	Preconstruction Partnering	$ 12,275.85	0
	PCO 010	Eaton Electrical Equipment	$147,735.82	0
3	Cntgy.	Owner's Contingency Allowance	$3,153,958.93	0
	Total	**Net Change to Contract**	**$13,945,682.58**	**0**

The total project funding request for Amendment 06 is $13,945,682.585. By authorizing this amendment amount, the following contract adjustments will be made:

Original Contract Value:	$ 2,865,000.00
Previous Amendments:	$ 241,339,317.42
Proposed Amendment 06	$ 13,945,682.58
Revised Total Contract Value:	$ 258,150,000.00

Respectfully,

Toby Flinn, PE
Vice President

Attachments:

1. GMP H2 Package
2. PCO004
3. PCO005
4. PCO006
5. PCO007
6. PCO008
7. PCO009
8. PCO010

South Wastewater Treatment Plant – MBR Project

GMP Proposal Submissions for:

GMPJ – Arch-Bldg Trades

Submitted: March 29, 2024

Sherman CLASSIC TOWN. BROAD HORIZON. | PAPE-DAWSON ENGINEERS | Kiewit | PLUMMER

March 29, 2024

Mr. Tom Pruitt, PE
City of Sherman
220 W. Mulberry Street
Sherman, TX 75090

RE: GMPJ Arch-Bldg Trades

Dear Mr. Pruitt:

Kiewit Water Facilities South Co. is hereby submitting GMPJ proposal for the South Wastewater Treatment Plant – MBR Project. The GMP proposal incorporates Bid Package 09-001 Arch-Bldg Trades.

RFP and Addenda for BP09-001 have been included in this proposal. The scope of work for BP09-001 includes Masonry, Doors, Windows, Structural Steel, Trusses, Roofing, Painting, HVAC, Plumbing for the Blower Building and MBR Support Building per the Arch-Bldg Trades Package ITB. Anticipated Work Start Date April 29, 2024 and Anticipated Finish Date February 4, 2025.

This scope is submitted as a lump sum to be billed against the proposed schedule of values. If the overall project schedule changes, this package may require additional funding that would be negotiated via the change management process.

Below is a table comparing the current proposed values to the overall project budget to help understand how this funding authorization fits within the overall projected construction budget.

GMP	GMP/Work Package Name	Previous	Current	Remaining	Forecast Value 65% Cost Model	Target
PCSA	Preconstruction Services	$ 1,950,000.00	$ -	$ -	$ 1,950,000.00	9/18/23
PCSB	Procurement Services	$ 915,000.00	$ -	$ -	$ 915,000.00	9/18/23
	Preconstruction Lump Sum	$ 2,865,000.00	$ -	$ -	$ 2,865,000.00	
GMPA	General Conditions	$ 16,866,305.00	$ -	$ -	$ 16,866,305.00	10/16/23
GMPB	Site Services	$ 18,399,017.31	$ -	$ -	$ 18,399,017.31	10/16/23
GMPC	Early Procurement	$ 16,000,000.00	$ -	$ 800,000.00	$ 16,800,000.00	10/16/23
GMPD	Grading, Excavation, SOE, Dewatering	$ 15,902,635.00	$ -	$ 3,000,000.00	$ 18,902,635.00	11/20/23
GMPE	Backfill	$ 5,068,000.00	$ -	$ -	$ 5,068,000.00	12/18/23
GMPF	Underground Piping	$ 39,952,988.25	$ -	$ 11,944,712.00	$ 51,897,700.25	12/18/23
GMPG	Concrete, Miscellaneous Metals	$ 32,311,000.00	$ -	$ 6,617,400.00	$ 38,928,400.00	12/18/23
GMPH	Electrical, Instrumentation	$ 19,921,397.00	$ -	$ -	$ 19,921,397.00	12/18/23
GMPI	Process Mechanical	$ 28,860,624.00	$ -	$ 1,580,000.00	$ 30,440,624.00	1/15/24
GMPJ	Building Trades	$ -	$ 7,544,000.00	$ 3,196,000.00	$ 10,740,000.00	3/20/24
GMPK	Site Finishes and Startup Support	$ -	$ -	$ 3,794,221.44	$ 3,794,221.44	5/24/24
	Cost of Work	$ 193,281,966.56	$ 7,544,000.00	$ 30,932,333.44	$231,758,300.00	
9%	Contingency	$ 17,395,376.99	$ 678,960.00	$ 2,783,910.01	$ 20,858,247.00	
	Cost of Work plus Contingency	$ 210,677,343.55	$ 8,222,960.00	$ 33,716,243.45	$252,616,547.00	
12.2%	~Additional GCs (12.2% When >$155M)	$ 8,821,808.27	$ 1,003,201.12	$ 4,113,381.70	$ 13,938,391.09	
	Subtotal Cost of Work	$ 219,499,151.82	$ 9,226,161.12	$ 37,829,625.15	$266,554,938.09	
9.95%	CMAR Fee	$ 21,840,165.61	$ 918,003.03	$ 3,764,047.70	$ 26,522,216.34	
	Construction Total	$ 241,339,317.42	$ 10,144,164.15	$ 41,593,672.85	$293,077,154.43	
	Preconstruction Plus Construction Total	$ 244,204,317.42	$ 10,144,164.15	$ 41,593,672.85	$295,942,154.43	

*Note: Remaining Values for Partial Packages (C,D,G) are approximations not supported by design or estimates.

*Note: The additional GCs are only calculating on Cost of Work plus Contingency above $138,367,439.73 per Amendment 01.

Respectfully,

James.Goyer Digitally signed by James.Goyer
DN: CN=James.Goyer, OU=Employees, OU=Users, OU=Kiewit, DC=KIEWITPLAZA, DC=com
Date: 2024.03.29 11:18:46-04'00'

James Goyer
Kiewit Water Facilities South Co.
Project Executive

Table Of Contents

1) Executive Summary

2) Bid Form

South Wastewater Treatment Plant – MBR Project

TO: City of Sherman/GTUA/Pape-Dawson **DATE:** 3/29/2024

FROM: Kiewit

SUBJECT: Executive Summary – Arch-Bldg Trades

COPIES: Transmitted Electronically via Email

GMP Overview

The following proposal includes Arch-Bldg Trades. Each Work Package is comprised of various Bid Packages that are described in Table 1.

Table 1: Work Packages

Work Package ID	Work Package Name	Associated Bid Packages
GMPA	General Conditions	BP02-001, BP03-001, 003, 011 to 017, 029-032, 039-045
GMPB	Site Services	BP03-All (Except those listed above)
GMPC	Early Procurement	BP01-All
GMPD	Early Grading, Excavation, SOE, Dewatering	BP04-001
GMPE	Backfill	BP04-002
GMPF	Underground Piping	BP05-001
GMPF2	Underground Piping Rebid	BP05-002
GMPG	Concrete	BP06-001
GMPH	Underground Electrical	BP07-001
GMPH2	Aboveground Electrical	BP07-002
GMPI	Process Mechanical	BP08-001
GMPJ	Building Trades	BP09-001
GMPK	Site Finishes and Startup Support	TBD

BP09-001 Overview
This scope of work includes Masonry, Doors, Windows, Structural Steel, Trusses, Roofing, Painting, HVAC, Plumbing for the Blower Building and MBR Support Building per the Arch-Bldg Trades Package ITB.

The services listed and provided are critical to the CMAR's ability to manage the project per the Contract documents, procedural requirements as outlined in the project management documents, and to satisfy best management practices. Any variation in these services could affect the CMARs ability to manage to the contract documents and best management practices standards.

The CMAR solicited, coordinated, and executed this GMP development per the CMAR Agreement and specifications. The speed of project execution has limited our ability to collaborate in depth but there has been discussion and review of certain scopes during task force meetings.

Bid Schedule & Results

BP09-001 Arch-Bldg Trades was issued for Notice to Bid on February 15, 2024. The Bid Package was due on March 20, 2024. Only one bidder, Kiewit Water Facilities South Co. submitted a proposal for the Base Bid in the amount of $6,560,000.00. Bid was submitted in a sealed package to the City of Sherman and was evaluated by a committee including the City of Sherman, Pape-Dawson, and Plummer. The committee recommended approval and award to Kiewit Water Facilities South Co.

Kiewit was unable to find a subcontractor for the drywall, resilient base cover, tile, and acoustical ceiling; therefore was excluded from this Bid Package. CMAR recommends including an Allowance in the amount of $200,000 for the drywall, resilient base cover, tile and acoustical ceiling work for the Membrane Support Building. Painting for Aboveground Piping and Supports is excluded, CMAR recommends including an allowance in the amount of $25,000. Fire Rating and Insulation was not shown on the Architectural Drawings, CMAR recommends including an allowance in the amount of $150,000.

CMAR support staff for BP09-001 is not required, CMAR has staff that can support this Bid Package. CMAR recommends an Owner's contingency of 15% to address design development from the current Bid Package to IFC. CMAR recommends contingency in the amount of $984,000. CMAR recommends a GMPJ cost of $7,544,000 (includes Owner's Contingency; excludes 9% Contingency, 12.2% Additional GCs & CMAR Fee).

Assumptions and Clarifications

1. Pricing is based on plans and specifications as provided.
2. City, County or State Building Permits and other permits are excluded for the Work in this GMP.
3. City, County or State Building Department Inspection fees are excluded.
4. Impact fees are excluded.
5. Fire Suppression and Bridge Cranes were excluded from BP09-001 Arch-Bldg Trades Bid Package and the expectation is the Bridge Cranes will be included in future Bid Packages or issued via an WCD.
6. Painting for the Galvanized Trusses, Galvanized Structural Steel and Metal Decking is excluded.
7. Painting/Coating provided in this Bid Package per the Room Finish Schedule only, unless noted otherwise.
8. Special Protective Coatings are excluded from this Bid Package.
9. Painting of Aboveground Piping is excluded from this Bid Package.
10. Only signage provide in this Bid Package is the signage listed in the Plastic Signage System Schedule per Specification 10 14 00.

65% Cost Model Pricing Comparison

The cost for the proposed GMPJ as presented in the 65% Design Cost Model has changed. Revised Drawings were issued with BP09-001, with the following impacts to costs:

1. In the 30% and 65% Cost Model HVAC and Plumbing were included in GMPI Process Mechanical for a total cost of $800,000. These costs were included in this Bid Package.
2. At the Blower Building, six (6) Steel Columns were added for roof support.
3. At the Blower Building, structural steel W-beams were increased from W12x35 to W14x53. Additional rows of W-beams were added at the Steel Columns noted above.
4. At the Blower Building, structural steel C-Channels (C5x9) were added at both ends of the building to support the roof.
5. At the Blower Building, a CMU wall was replaced by a Concrete wall above the top line of the CMU.
6. At the Blower Building, a concrete beam is now shown on top of the CMU for connection to the Trusses.
7. At the Membrane Support Building, CMU walls were added for the Control Room, Rest Room and Office.

8. At the Membrane Support Building, structural steel W-beams (W10x22) were added for the Control Room, Rest Room and Office.
9. At the Membrane Support Building, structural steel C-Channels (C5x9) were added at both ends of the building to support the roof.
10. At the Membrane Support Building, an 8”x8” curb was added at the base of the CMU walls.
11. At the Membrane Support Building, a Concrete wall above the top line of the CMU was added.

Figure 1: 65% Cost Model Blower Building

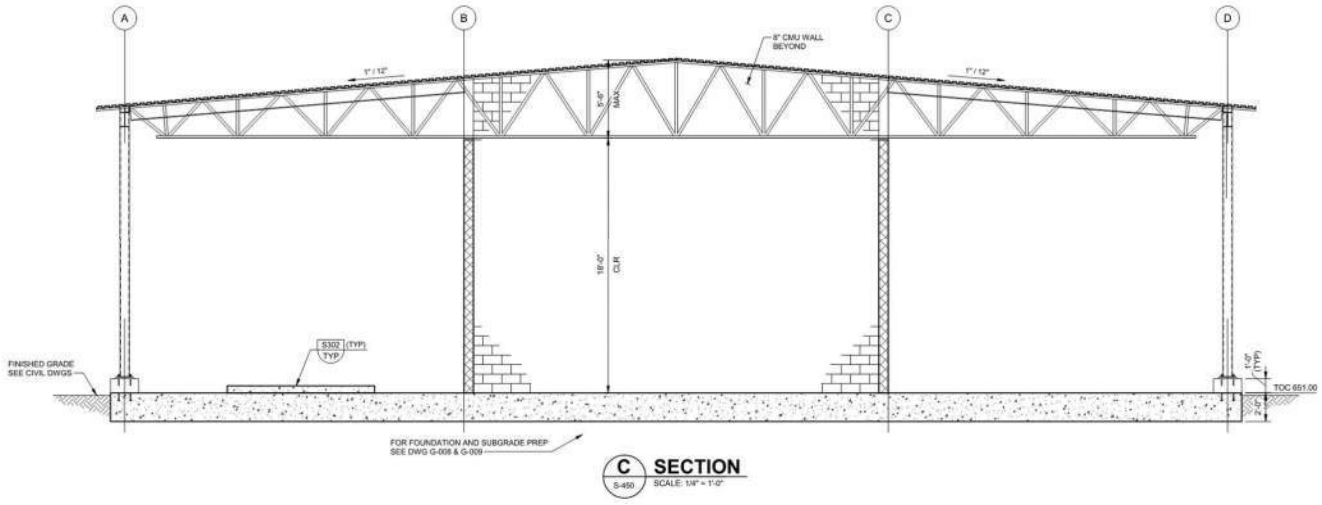

Figure 2: 65% Cost Model Membrane Support Building

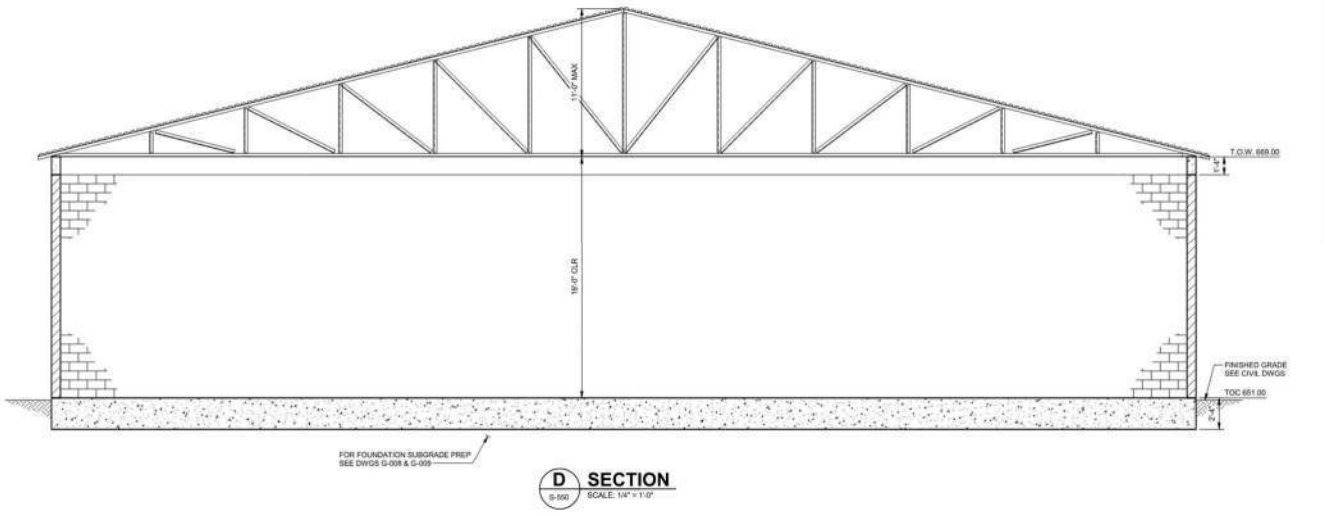

Figure 3: BP09-001 Blower Building

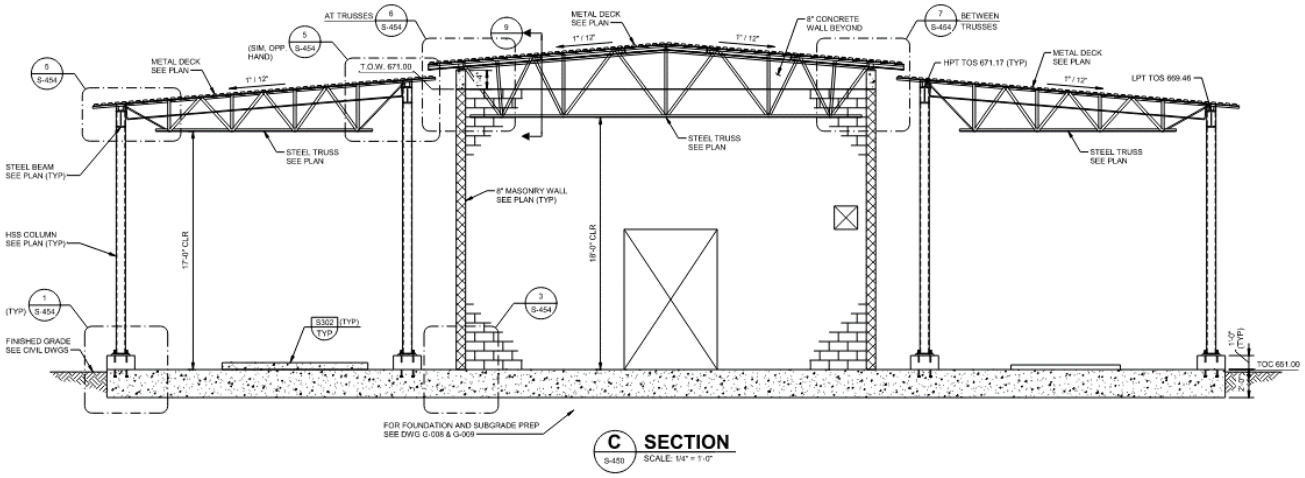

Figure 4: BP09-001 Membrane Support Building

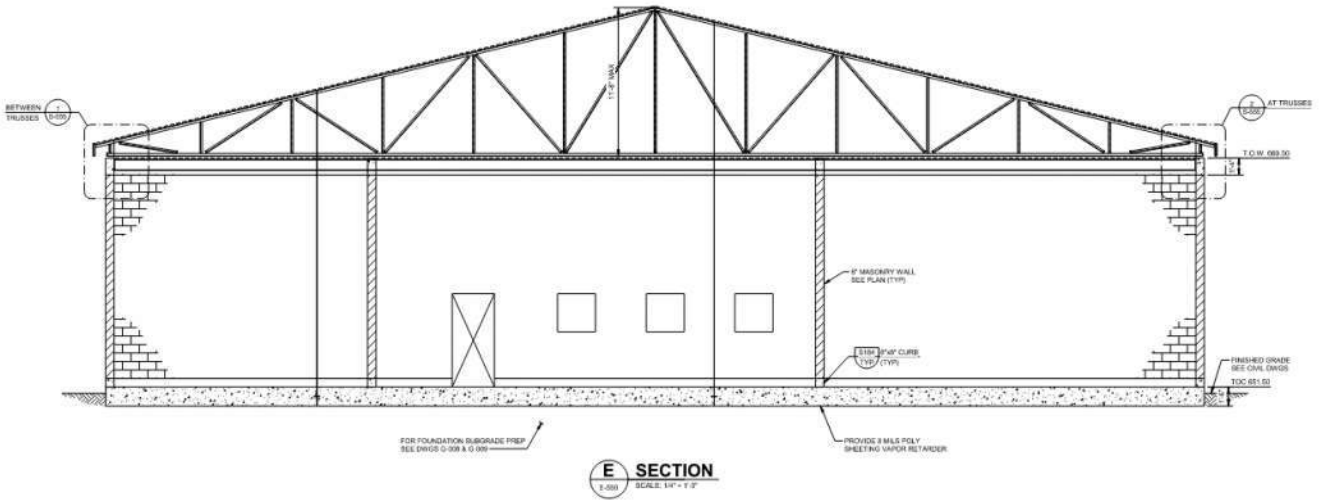

Figure 5: 65% Cost Model Versus Current Forecast GMPJ Table $296M

GMP	GMP/Work Package Name	30% Cost Model	Forecast Value 65% Cost Model
PCSA	Preconstruction Services	$ 1,950,000.00	$ 1,950,000.00
PCSB	Procurement Services	$ 915,000.00	$ 915,000.00
	Preconstruction Lump Sum	$ 2,865,000.00	$ 2,865,000.00
GMPA	General Conditions	$ 16,866,305.00	$ 16,866,305.00
GMPB	Site Services	$ 18,399,017.31	$ 18,399,017.31
GMPC	Early Procurement	$ 10,000,000.00	$ 16,800,000.00
GMPD	Grading, Excavation, SOE, Dewatering	$ 12,453,579.16	$ 18,902,635.00
GMPE	Backfill	$ 2,312,395.16	$ 5,068,000.00
GMPF	Underground Piping	$ 41,784,737.61	$ 51,897,700.25
GMPG	Concrete, Miscellaneous Metals	$ 23,241,313.76	$ 38,928,400.00
GMPH	Electrical, Instrumentation	$ 35,530,865.34	$ 19,921,397.00
GMPI	Process Mechanical	$ 30,315,016.30	$ 30,440,624.00
GMPJ	Building Trades	$ 7,813,865.58	$ 10,740,000.00
GMPK	Site Finishes and Startup Support	$ 3,794,221.44	$ 3,794,221.44
	Cost of Work	$ 202,511,316.66	$231,758,300.00
9%	Contingency	$ 18,226,018.49	$ 20,858,247.00
	Cost of Work plus Contingency	$ 220,737,335.15	$252,616,547.00
12.2%	~Additional GCs (12.2% When >$155M)	$ 11,445,475.22	$ 13,938,391.09
	Subtotal Cost of Work	$ 232,182,810.37	$266,554,938.09
9.95%	CMAR Fee	$ 23,102,189.63	$ 26,522,216.34
	Construction Total	$ 255,285,000.00	$293,077,154.43
	Preconstruction Plus Construction Total	$ 258,150,000.00	$295,942,154.43

*Note: Remaining Values for Partial Packages (C,D,G) are approximations not supported by design or estimates.

*Note: The additional GCs are only calculating on Cost of Work plus Contingency above $138,367,439.73 per Amendment 01

Contract and Payment Mechanism

It is expected that the components of this work package approval will be invoiced as stated below:

1. BP09-001 – Arch-Bldg Trades: Will be invoiced a Lump Sum per agreed schedule of values.
2. Contingency: Contingency will be allocated to Cost of Work according to the change management process then invoiced accordingly, generally as a Lump Sum.
3. Construction Fee Insurance will be invoiced at the percentages defined in the Agreement.

Plans and Specifications

The following listing of plans, specifications, and documents were used in the development of vendor bid package for this GMP.

Table 2: Reference Specifications / Drawings

Technical Specification / Drawing Title	Specifications / Drawings
00 01 07	Engineer's Seals Page
04 05 17	Mortar and Masonry Grout
04 05 18	Adhesive Bonding Reinforcing Bars and All Thread Rods in Masonry
04 05 23	Masonry Accessories
04 22 00	Concrete Unit Masonry
05 21 19	Open Web Steel Joist Framing
*07 19 00	Water Repellents
*07 21 14	Wall Insulation System
*07 21 17	Batt Insulation
*07 22 00	Roof and Deck Insulation
*07 41 14	Metal Roof and Soffit Panels
*07 92 00	Joint Sealants
*08 14 16	Flush Wood Doors
*08 17 34	Pre-Assembled Plastic Door Assemblies
*08 31 14	Floor Access Doors
*08 33 23	Overhead Coiling Doors
*08 51 13	Aluminum Windows
*08 71 00	Door Hardware
*08 80 00	Glazing
08 91 00	Louvers
*09 22 17	Non-Load Bearing Wall Framing
*09 29 00	Gypsum Board
*09 30 13	Ceramic Tiling
*09 51 13	Acoustical Panel Ceilings
*09 53 00	Acoustical Ceiling Suspension Assemblies
*09 65 13	Resilient Base and Accessories
*09 65 19	Resilient Tile Flooring
*09 91 00	Painting
09 91 00-PS	Painting and Protective Coatings
*10 14 00	Signage
10 28 13	Toilet Accessories
10 40 10	Safety Equipment
10 44 00	Fire Protection Specialties

*12 35 54	Metal Laboratory Casework
*12 36 24	Laboratory Work Surfaces
22 42 01	Plumbing Systems
22 45 17	Emergency Eye/Face Wash and Shower Equipment
23 05 00	Common Work Results for HVAC
23 05 93	Testing, Adjusting, and Balancing for HVAC
23 07 13	Ductwork Insulation
23 09 13	Instrumentation and Control Devices for HVAC
23 31 13	Metal Ducts
23 34 01	Fans
23 41 51	Positive Pressurization Equipment
23 81 14	Air Conditioning Units
23 81 42	VRF Heat Pumps
23 83 01	Heating Units
03 11 07	Concrete Formwork
03 15 00	Concrete Accessories
03 15 14	Hydrophilic Rubber Waterstop
03 20 00	Concrete Reinforcing
03 21 17	Adhesive-Bonded Reinforcing Bars and All Thread Rods in Concrete
03 30 00	Cast-in-Place Concrete
03 35 29	Concrete Finishes
03 60 00	Grouting
03 60 01	Basin Bottom Grout
03 63 01	Epoxies
03 63 02	Epoxy Resin/Portland Cement Bonding Agent
03 70 30	Thermal Control of Concrete
05 05 24	Mechanical Anchoring and Fastening to Concrete and Masonry
05 12 00	Structural Steel Framing
05 31 00	Steel Decking
07 11 00	Dampproofing
G-008	GENERAL STRUCTURAL NOTES 1
G-009	GENERAL STRUCTURAL NOTES 2
A-001	Room Finish and Door and Hardware Schedule
A-450	Blower Building Code and Egress Plan
A-451	Blower Building Floor Plan
A-452	Blower Building Roof Plan
A-453	Blower Building West and North Elevations
A-454	Blower Building East and South Elevations Copy1
A-550	MBR Support Building Code and Egress Plan

A-551	MBR Support Building Floor Plan
A-552	MBR Support Building Reflected Ceiling Plan
A-553	MBR Support Building Roof Plan
A-554	Enlarged Plans
A-556	MBR Support Building North and East Elevations
A-557	MBR Support Building South and West Elevations
G-011	HVAC Notes, Abbreviations, and Symbols
P-01	General Notes, Abbreviations, and Equipment Schedules
H-9003	Equipment Schedules
H-450	Blower Electrical Room – Floor Plan
H-456	Blowers Electrical Room – Airflow Schematic
H-550	Membrane Support Building – Floor Plan
H-551	Membrane Support Building – Airflow Schematic
P-550	MEMBRANE SUPPORT BUILDING – PLUMBING PLAN
P-551	MEMBRANE SUPPORT BUILDING – PLUMBING ISOMETRIC
P-552	MEMBRANE SUPPORT BUILDING – DRAINAGE PLAN
P-553	MEMBRANE SUPPORT BUILDING – DRAINAGE ISOMETRIC
A-9000	ARCHITECTURAL TYPICAL DETAILS I
A-9001	ARCHITECTURAL TYPICAL DETAILS II
A-9002	ARCHITECTURAL TYPICAL DETAILS III
A-9003	ARCHITECTURAL TYPICAL DETAILS IV
M-9012	MECHANICAL TYPICAL DETAILS XIII
P-9000	PLUMBING TYPICAL DETAILS 1
P-9001	PLUMBING TYPICAL DETAILS 2
S-9010	STRUCTURAL TYPICAL DETAILS 11
S-9011	STRUCTURAL TYPICAL DETAILS 12
S-450	BLOWER BUILDING FOUNDATION PLAN
S-451	BLOWER BUILDING – ROOF FRAMING PLAN
S-452	BLOWER BUILDING SECTIONS I
S-453	BLOWER BUILDING SECTIONS II
S-454	BLOWER BUILDING SECTIONS AND DETAILS I
S-455	BLOWER BUILDING SECTIONS AND DETAILS II
S-550	MEMBRANE SUPPORT BUILDING FOUNDATION PLAN
S-551	MEMBRANE SUPPORT BUILDING – PLAN AT EL. 669.50
S-552	MEMBRANE SUPPORT BUILDING – ROOF FRAMING PLAN
S-553	MEMBRANE SUPPORT BUILDING SECTIONS I

S-554	MEMBRANE SUPPORT BUILDING SECTIONS II
S-555	MEMBRANE SUPPORT BUILDING SECTIONS AND DETAILS I
G-008	Structural Notes 1
G-009	Structural Notes 2
Addendum No. 1 Dated February 27, 2024	
Addendum No. 2 Dated February 29, 2024	
Addendum No. 3 Dated March 6, 2024	

BID FORM

Bid Package: BP09-001 Architectural & Building Trades

Bidder Name: Kiewit Water Facilities South

SCOPE DESCRIPTION

1. Painting and Protective coatings shall consist of but not limited to Exterior and Interior access as needed surface preparation and coating of substrates as applicable per structure.
2.Building Trades shall consist of but not limited to the published specifications for roofing, cmu, all doors, windows, louvers, gypsum board, acoustic tile ceilings, resilient base, acoustic treatment, signage, toilet and bathroom accessories, fire extinguishers, window treatment operating hardware, metal laboratory casework, furnishings and accessories as applicable per structure shown on drawings. Canopies limited to those shown in supplied drawings, not site-wide.
3. Per published specifications for all concrete, vertical and horizontal surfaces. Concrete masonry units (CMU), Steel, Galvanized metal, Aluminum (not anodized or otherwise coated), Plastic trim
4. Mobilization and Demobilization including clean up within two weeks of completion of work or notification by CMAR.
5.To include but not limited to office trailer(s), laydown area, management plans, P6 schedule with equipment and labor loaded, any additional testing, safety, quality and environmental plan.

6.Subcontractor is required to attend and participate in safety and schedule meetings. Minimum 4 hours indoctrination required for all employees on site. Any work outside of normal hours needs to be scheduled and approved ahead of time with approval from CMAR.
7.CMAR shall provide benchmark survey once in the vicinity of subcontracted work. Subcontractor shall be responsible for necessary field measurements, verification of measurements, additional survey and final layout as required for installation of their work.
8. Subcontractor to include as-builts drawing markups as required. Survey request must be submitted 48 hours in advance. Unless specifically excluded, Bidder's pricing should include all overhead and indirect costs, including but not limited to: project management, administrative work, office rent & utilities, invoice preparation costs, insurance costs, financing costs, Personal Protective Equipment (PPE), tools, and supplies purchases, fuel, and maintenance. Must include all applicable subcontractor coordination.
9. Maintaining access to the work, incidental weather condition access, layout, line and grade, equipment and night work.
10. Must perform and maintain a material receiving report. Must notify CMAR of scope and/or change orders as they occur. Must follow CMAR and OSHA safety requirements.
11.Subcontractor is responsible for any additional testing if necessary. Subcontractor shall provide required quality and turnover documentation to the CMAR in an organized format as specified by CMAR. Any electronic files must follow a naming convention and organization specified by CMAR.
12. Cranes to be provided by CMAR.
13. Subcontractor must provide their own OSHA compliant rigging from the hook down.
14. Subcontractor must adhere to the CMAR's crane policies and information. Subcontractor must acknowledge crane pad layout. Must coordinate weekly crane schedule meetings with CMAR.

15.Submission of a 4-week look-ahead schedule on a weekly basis and an overall Critical Path Method (CPM) schedule showing all activities monthly. All equipment mobilized to the project site shall be in safe working order.
16. Subcontractor to adhere to Texas Code Chapter 2258 wage requirements.
17. Personal Protective Equipment (PPE) to include hard hats, safety glasses, safety vest, steel toe boots, and work gloves. PPE shall be worn 100% of the time while performing work onsite. If applicable, Bidder shall provide PPE, including fall protection equipment and devices. Subcontractor will be back charged for any PPE or other safety equipment that CMAR supplies on their behalf.

18. Supervisors or foreman will attend weekly site coordination meetings. All employees will attend monthly safety meetings.
19. Subcontractor is responsible to submit a TSCD (temporary structures and construction devices) plan and abide by all requirements per CMAR safety plan which includes post-incident report.

20. Unless specifically excluded, Bidder's pricing should include all overhead and indirect costs, including but not limited to: project management, administrative work, office rent & utilities, invoice preparation costs, insurance costs, financing costs, Personal Protective Equipment (PPE), tools, and supplies purchases, fuel, and maintenance. Must include all applicable subcontractor coordination. Protection of finished work is required.
21. A performance bond is required for this project. Liquidated Damages as applicable. Anticipated manpower needed.
22. Within 30 days of notice of award, Subcontractor will need to integrate with project CPM and coordinate with other successful bidders to achieve project milestones.
23. Schedule submittal to CMAR shall be completed by Subcontractor within 10 business days of NOA.
24. Subcontractor will be responsible for site cleanup on a daily basis and may need to dedicate staff to help with cleanup. Subcontractor will be responsible for getting any waste to the dedicated waste disposal locations (provided by CMAR).
25. Subcontractor responsible for all required permits and inspections for the work completed. If exclusions apply, Subcontractor will be responsible for communicating those in their proposal.

26. Subcontractor must provide a marked up site plan with proposed and agreed upon laydown and trailer area for applicable work.
27. HVAC and Plumbing Systems shall be included per spec.

LIST OF SCOPE SPECIFIC SUPPORTING DOCUMENTS, TECH SPECS					
Item	**Technical Specification / Drawing Title**	**Specification / Drawing No.**			**Revision No.**
1	SWWTP-MBR Drawings				
2	SWWTP-MBR Specifications				
3	CMAR Project Schedule (P6)				
4	Sherman Combined Specifications_10.6.2023				
5	TSCD Plan				
6	Crane Layout				
7	Crane Policies and Information				
8	CMAR Written Site Specific Safety Plan				

BID ITEM	DESCRIPTION	QUANTITY	UNIT OF MEASURE	UNIT PRICE	EXTENDED PRICE
1	Mobilization	1	LS	$ 250,000.00	$ 250,000.00
2	Blower Building	1	LS	$ 1,750,000.00	$ 1,750,000.00
3	Membrane Support Building	1	LS	$ 4,435,000.00	$ 4,435,000.00
4	Demobilization within 2 weeks of completion or notice from CMAR	1	LS	$ 125,000.00	$ 125,000.00
				SUBTOTAL BASE BID SCOPE =	$ 6,560,000.00
				PAYMENT AND PERFORMANCE BOND RATE =	N/A

Total Bid Price (Subtotal Base Bid Scope + Subtotal Additive Alternates) is the Price used in the Best Value Scoring Matrix evaluation of the Bid.

Alternatives

BID ITEM	DESCRIPTION	QUANTITY	UNIT OF MEASURE	UNIT PRICE	EXTENDED PRICE
				N/A	N/A
				SUBTOTAL ADDITIVE ALTERNATES =	0
				TOTAL BID PRICE (Subtotal Base Bid Scope + Subtotal Additive Alternates) =	$ 6,560,000.00

Questions for Bidders	Answer (Yes/NO)	Additional/Clarifying Notes
Do you have experience working with the City of Sherman?	Yes	
Do you have experience with Alternative Delivery Projects?	Yes	
Bidder will be responsible for coordinating/scheduling with other trades. Do you agree to coordinate with CMAR and other trades to complete work within schedule?	Yes	
A performance bond will be required for this work. Have you priced this surety separate from the bid items above?	N/A	
Will you require warehouse space? Include needs in additional/clarifying notes. Bidder will be responsible for their own forklifts and other equipment to perform the work.	Yes	
Is Bidder capable and willing to support multiple shift operations if requested by CMAR?	Yes	
Have you completed the exceptions and assumptions tabs of this document and included in your submittal?	Yes	
Do you agree to the commercial terms in the draft subcontract?	Yes	
Do you agree to liquidated damages of $1,000 day will apply to P6 Schedule, quality and turnover documents, integration into Project CPM within 30 days of NOA, submittal of schedule of submittals within 10 days of NOA, delays caused to other subcontractors.	Yes	

Bidder acknowledges receipt of the listed Addenda to the RFP. Such Addenda were received prior to submittal of this bid and are made part of Bidder's pricing.

Addendum No. 1 Date: 2/27/2024

Addendum No. 2 Date: 2/29/2024

Addendum No. 3 Date: 3/6/2024

Addendum No. _____ Date: _____

Addendum No. _____ Date: _____

Addendum No. _____ Date: _____

SUBMITTED BY

Name: Terry J. Carlsgaard
Signature: Terry J Carlsgaard
Title: President
Date: 3/20/2024

FOR

Company: Kiewit Water Facilities South, Co.
Address: 2050 Roanoke Rd., Suite 250
Westlake, TX 76262
Phone: 469-276-3800
E-Mail: Terry.Carlsgaard@Kiewit.com

VALUE ENGINEERING CONCEPTS:

As part of the bid, if Subcontractor has ideas on cost savings and value engineering while meeting the specifications and the required quality for the Project, please include any potential concepts and the reduction in price in the below table. Additional rows can be added as required. All value engineering ideas will need to be evaluated by the CM/GC, the Client, and the Engineer of Record. Additional information may be required from the Subcontractor.

	DESCRIPTION	QUANTITY	UNIT OF MEASURE	UNIT PRICE	REDUCTION IN PRICE
VE1	Value Engineering - Concept 1				
VE2	Value Engineering - Concept 2				

Commercial Bid Form Exceptions Tab		
Number	Section	Exception Notes
1	Electrical appurtenances and terminations to plumbing equipment	All electrical appurtenances (conduit, j-boxes, wall plugs, wire, etc.) along with any final terminations to plumbing equipment is excluded.
2	Controls and Integration of plumbing equipment and devices	All plumbing equipment integration and/or controls into a Scada or similar system is excluded.
3	Valve Tags, Pipe Painting, and Pipe Labeling	All valve tags, pipe painting and labeling for the pipe and appurtenances shown on the plumbing drawings is excluded.
4	Fire Sprinkler / Suppression Systems	Fire Sprinkler and Fire Suppression systems other than the called out fire extinguishers are excluded.
5	Permits	City, County or State Building Permits and other permits are excluded for the Work in this GMP.
6	Inspection Fees	City, County or State Building Department Inspection fees are excluded.
7	Fees	Impact fees are excluded.
8	Special Protective Coatings	Special Protective Coatings are excluded from this Bid Package.
9	Painting Aboveground Piping and Supports	Painting of Aboveground Piping and Supports is excluded from this Bid Package.
10	Pipe Supports	Pipe Supports are excluded from this Bid Package.
11	Startup	Specification 01 75 00 Starting and adjusting take exception.
12	Special Inspection	On Drawing G-008, Structural Note 1 Special Inspection excluded from this Bid Package.
13	Not enough detail for the "Closure Plate" in Detail 2 DWG S-555	The Closure Plates on Detail 2 DWG S-555 and S-553 are excluded.
14	Typal S734 and S708 on S-551	No deck support between beams, Anything related to Details S734 and S708 on S-551 is excluded.
15	Truss Struts L 2x2x1/4 shown on S-552	Truss Struts L 2x2x1/4 shown on S-552 are excluded.
16	Lintels	Lintels are excluded from this BP, No Lintel is shown on the drawings.
17	Metal Deck, Trusses , and Beams	Coating/ Painting of metal deck and trusses are excluded
18	Pump Gallery Laboratory Sink and Casework	Laboratory sink and casework in the Membrane Support Building Pump Gallery is excluded.
19	Under slab Chemical Drain Piping	CPVC/Chemical Drain Piping for under slab is excluded.
20	Condensate Pits	Condensate Pits for HVAC condensate are excluded from this bid package.
21		
22		
23		
24		
25		

Commercial Bid Form Assumptions Tab		
Number	Area of Assumption	Assumption Notes
1	Open Ended Drains (OED)	OED's assumed to be spec'd floor drain models due to lack of a material spec. Air gaps assumed to be no-hub style and connected via fernco compression couplings.
2	Under slab pipe trench dimensions	Assumed we will follow same trench dimension details from UG pipe bid package.
3	Copper lines for trap primer feed lines	Assumed that the PW feed lines from the electronic trap primer to each trap are to be copper.
4	1.5" Supply line to Shower	Assumed 1.5" Supply line to showers based on Civcast response to question #12
5	Backflow Preventer Supports	Pipe supports for the BFPV's are stanchion style created with double Unistrut, post base, L bracket, and pipe straps due to lack of a detail.
6	Bathroom Floor Drain	Assumed that the only drain that needs a mechanical trap primer is the floor drain in the bathroom.
7	Copper lines through slab	All copper supply lines from electronic trap primer routed through slab with no sleeves or modular mechanical seals as shown on detail HP520. Additionally, mechanical trap primer assumed the same penetration method as the electronic trap primer.
8	Penetrations through Masonry Walls	All penetrations through Masonry Walls are cored with double link-seals. No backer rod or grout provided.
9	Under slab pipe encasements	All underground drain, sanitary sewer, and potable water feed to traps are concrete encased.
10	Exterior Yard Cleanouts	Exterior YCO's are spec as cast iron fittings connecting to PVC pipe. No-hub style fitting with fernco compression coupling provided.
11	Detail HP120 - Wall Cleanout	Cast Iron no-hub fitting provided with fernco compression coupling to attach to pvc.
12	Under slab drain, sanitary sewer, and pw copper	All under slab service lines necessary for a complete plumbing system consistent with the plumbing drawings and scope are considered a part of this package. This includes the necessary excavation, backfill, and material install.
13	Detail HP538 - In-Line Flow Control	The In-line flow control shown on detail HP538 is not provided as no specs were provided for the appurtenance.
14	Freeze Protected (Exterior) Shower & Eye Wash Water Supply Connection	Water Supply connection is assumed to attach to the shower head end of the equipment.
15	Water Hammer Arrestor Locations	Water Hammer Arrestor's are only provided at each instantaneous electric water heater location as shown on the detail HP538.
16	Pricing	Pricing is based on plans and specifications as provided.
17	Building Code	There are no accommodation or allowance for changes regarding 2024 Building Code revisions included in this GMP.
18	Painting galvanized metal	Painting for the Galvanized Trusses, Metal Decking, Galvanized Structural Steel (C-Channels, W-Beams) is not included per Specification 09 91 00-PS 3.6 L. Engineer confirmed the galvanized trusses and deck do not need to be coated in the Blower Building and the MBR Support Building.
19	Room Finish Schedule	Painting/Coating provided in this Bid Package per the Room Finish Schedule only, unless noted otherwise.
20	Signage	Only signage provide in this Bid Package is the signage listed in the Plastic Signage System Schedule per Specification 10 14 00.
21	Warranties	Warranty period 12 months from Substantial Completion per Schedule provided in the Bidding Documents. Except if noted otherwise in the individual specifications.
22	W10x22 connections at the concrete tie beams	A 1/2x4 1/2x12" Plate and 2 Ea. 3/4" anchor bolts are assumed on each end of W10x22 beam.
23	Concrete Pan Deck @ EL: 669.5	Assume Concrete Pan Deck @ EL: 669.5 has two bulkheads.
24	Drywall, Tile, Resilient Base Cover and Acoustical Ceiling	Drywall, Resilient Base Cover, Tile and Acoustical Ceiling is excluded because we couldn't find the appropriate subcontractors. However, we recommend the CMAR include these trades as an Allowance in the GMP.
25	Galvanized Trusses	87' Trusses for S552 Building will be spliced and double dipped for galvanizing due to lengths.
26	Structural Steel welding and Fasteners	Some connections shown may be shop welded and Fasteners may be utilized in lieu of field welding
27	Concrete Pan Deck @ EL: 669.5	Assume Concrete Pan Deck @ EL: 669.5 is 4 inches thick
28	Bollards	Assumed six (6) Ea. Bollards. 2 Ea at each rollup doors.
29	HVAC Supply Grills and Returns	Supply grills and returns no details provided assumed grille and supply sizes. Grilles per Specification Section 23 05 00.
30		

PLUMMER

Potential Change Order (PCO) Request

PROJECT NO: 1422-005-02

PROJECT: South Wastewater Treatment Plant - MBR
OWNER: City of Sherman
CONTRACTOR: Kiewit Construction South
ENGINEER: Plummer Associates, Inc.
PCO NO.: 04

DESCRIPTION:

NOTIFICATION BY CONTRACTOR

The Contractor proposes to make the additions, modifications, or deletions to the Work described in the Contract Documents, as shown in Attachment "A" and requests that you take the following action:

- ☐ Notify us that you concur that this change does not require a change in Contract time or amount and issue a Field Order.
- ☒ Issue a Change Order for performing the described change. Change in Contract amount is indicated in the attached detailed cost breakdown of labor, materials, equipment and all other costs associated with this change. Impacts on Contract Time are shown in the attached revised schedule.
- ☐ Authorize the Contractor to proceed with the described change. Payment will be requested at the unit price bid.
- ☐ Authorize the Contractor to proceed with the change under the time and materials provisions of the Contract.

By: Kory Kyllo Date: 2/7/2024

ENGINEER'S RESPONSE

We respond to your request as follows:

- ☐ We concur that this is a no cost or time change. See attached/forthcoming Field Order No. / comments.
- ☒ Your proposal is recommended to the Owner. See attached/forthcoming proposed Change Order.
- ☐ Proceed with the change at the unit price bid.
- ☐ Proceed with the change under the time and materials provisions of the Contract.
- ☐ Additional information is required to evaluate this request. Provide information as described in the attached comments and resubmit.
- ☐ Potential Change Order Request is not accepted.

Construction Manager: Brian Beach, PE CCM Date: 4/3/2024

Engineer: Date: 4-3-2024

Program Manager: Date: 4/4/24

Owner: Digitally signed by Tom Pruitt Date: 2024.04.04 10:33:16-05'00' Date: 4/4/2024

POTENTIAL CHANGE ORDER

PCO is in response to WCD0010

Kiewit

Date: February 7, 2024	Potential Change Order #: PCO-0004	Revision #: 0
To: City of Sherman (COS) 220 W. Mulberry Street Sherman, TX 75090	Contract #: 1513-U Construction Manager at Risk (CMAR)	Project: South WWTP - MBR

Drawing, Specification, Equipment Number or Other Reference: 2024 0111 Process Design Task Force Meeting Notes, Email FW: [External]RE: **URGENT** City of Sherman Project - Xylem Sanitaire/Flygt Material Contracts - Bid Award, Email RE: [External]RE: City of Sherman, TX South WWTP MBR - Submersible Mixers RAS PS - REVISED Quote - RAS Mixers, COSK-KWT-CMS-LTR-0030 Xylem Stainless

Description of the Proposed Change Order Work: adders to Xylem for stainless steel droplegs and cooling loops at the aeration grids and Sludge Storage Tank and 2 submersible RAS mixers

Pursuant to General Conditions Section 10.05, B. of the Agreement and the above references, CMAR has gathered the Quotes from Xylem for the additional scope for the stainless steel droplegs and cooling loops at the aeration grids and Sludge Storage Tank that were scopes originally in BP08-001 Process Mechanical package and the addition of 2 submersible mixers for the RAS Pump Station which originated from design growth after Xylem was awarded their contract. These additions were at the direction of Plummer and are recorded in the various attached meeting minutes and emails. There is currently no anticipated impact on schedule. The CMAR support services are T&M per Amendment 1 and are not included in this PCO.

These additional scopes result in an addition for GMP C.

Construction				**Estimated Effect on Contract Price**
Lump Sum ($)	Contingency 9% ($)	Additional GCs (12.2% When>$155m)	Fee 9.95% ($)	Change Impact ($)
$57,880.30	$5,209.23	$7,696.92	$7,043.25	**$77,829.70**

Detailed components of above categories must accompany this estimate (discipline, craft, commodity of material, etc.)

Estimated Effect on Project Schedule (calendar days)		**Estimated Effect on Contract Terms**
Substantial Completion	N/A	N/A
Final Completion	N/A	N/A

Recommended by: Kiewit Water Facilities South Co.

Project Manager: _____ Contractor 2/7/2024 Date

Recommended by: Design Engineer

_____ _____
Name *Date*

Approved by: Program Manager

_____ _____
Name *Date*

Recommended by: Program Construction Manager

Brian Beard 2/28/24
Name *Date*

Approved by: City of Sherman

_____ _____
Name *Date*

Approval Signatures are on the PCO cover sheet from Plummer

Basis of Estimate: Xylem Changes

Summary

1. Stainless Steel Droplegs and Cooling Loops at the Aeration Grids	Total	$0*
2. Stainless Steel Droplegs and Cooling Loops at the Sludge Storage Tank	Total	$38,000
3. 2 Submersible Mixers for the ~~Biological Reactor Basins (BRBs)~~	Total	$19,880.30
RAS Pump Station	**Grand Total**	**$57,880.30**

1. Stainless Steel Droplegs and Cooling Loops at the Aeration Grids

Total	$0*

The additional scope for the stainless steel droplegs and cooling loops at the aeration grids was transferred from BP008-001 Process Mechanical, see attachments 2., 3., and 4. Xylem provided a price of $143,000.00, see email attachment 1. Urgent City of Sherman Project - Xylem Sanitaire Flygt Material Contracts - Bid Award.

*This portion of the PCO is to cover scope change and results in $0 because the $143,000.00 was written into Xylem's base contract and is being covered with the remaining GMP C funding. CMAR reserves the right to ask for additional T&M funding to cover "Any time spent supporting the negotiations, submittals, and supplier quality surveillance (aka site inspections) until it arrives on the project" as written in Amendment 1.

2. Stainless Steel Droplegs and Cooling Loops at the Sludge Storage Tank

Total	$38,000.00

The additional scope for the stainless steel droplegs and cooling loops at the sludge storage tank was transferred from BP008-001 Process Mechanical, see attachments 2., 3., and 4. Xylem provided a price of $38,000.00, see attachment 5. City of Sherman - MC Section 9 Discussion.

3. 2 Submersible Mixers for the ~~Biological Reactor Basins (BRBs)~~

RAS Pump Station

Total	$19,880.30

The additional scope for the 2 submersible mixers for the BRBs came from design growth, see attachments 2., 3., 4., and 6. Early RAS PS design did not have a need for mixers. Xylem provided a price of $19,880.30, see attachment 6. City of Sherman, TX South WWTP MBR - Submersible Mixers RAS PS - REVISED Quote - RAS Mixers. From Attachment 7. COSK-PLA-PRC-PRP-0015.00.IFU.00.01 Xylem on page 16, the original price shown is $255,599.70 and the revised price is $275,480.00, see attachment 8. In

KIEWIT WATER FACILITIES SOUTH CO.
2050 Roanoke Rd, Westlake, TX 76262

attachment 8. 2023-DAL-0577,A3,V1 (Sherman S. WWTP - MBR Equipment Package 4) 2.5.24, the additional 2 submersible mixers are on the lines with the red highlighted text, see excerpt below.

MIXERS (SEC. 46 41 25 - SUBMERSIBLE MIXERS: HIGH-SPEED) (RAS)		$10,248
Qty	Description	
2	Flygt Model SR-4630 Submersible Mixer, Stainless steel (ASTM 316L), equipped with a 460 Volt / 3 phase / 60 Hz 2.5 HP 855 RPM motor, Prop 5°, 50 Ft. length of SUBCAB 4G2,5+2x1,5 submersible cable, C/W FLS leakage detector	

MIXERs ACCESSORIES (SEC. 46 41 25 - SUBMERSIBLE MIXERS: HIGH-SPEED) (RAS)	$ 7,836
Qty	Description
2	SOCKET, PLATFORM ASSEMBLY
2	KIT, SYSTEM IV-2" FLOOR MOUNT+ 20'CABLE, ONE SUPPORT
20	GUIDE RAILS, 2"x2" 3/16" SS
2	MINI-CASII/FUS 120/24VAC,24VDC
2	SOCKET,11-PIN BACK MOUNTING

The additional freight was $1,796.30. This comes to the total of $19,880.30 see attachment 6.

Attachments

1. Email: Urgent City of Sherman Project - Xylem Sanitaire Flygt Material Contracts - Bid Award
2. MOM: 2024 0111 Process Design Task Force Meeting Notes
3. MOM: 20053326-COSK-KWT-DNG-MOM-0034.00.IFR.00.01
4. MOM: 20053326-COSK-KWT-DNG-MOM-0037.00.IFR.00.01
5. Email: City of Sherman - MC Section 9 Discussion
6. Email: City of Sherman, TX South WWTP MBR - Submersible Mixers RAS PS - REVISED Quote - RAS Mixers
7. Bid Proposal Form: COSK-PLA-PRC-PRP-0015.00.IFU.00.01 Xylem
8. Quote: 2023-DAL-0577,A3,V1 (Sherman S. WWTP - MBR Equipment Package 4) 2.5.24
9. LTR: COSK-KWT-CMS-LTR-0030 Xylem Changes Early Procurement Package 4 BP01-004 GMP C Bid items 14 and 15

KIEWIT WATER FACILITIES SOUTH CO.
2050 Roanoke Rd, Westlake, TX 76262

Charles.Wampler

From: Charles.Wampler@kiewit.com
Subject: FW: [External]RE: **URGENT** City of Sherman Project - Xylem Sanitaire/Flygt Material Contracts - Bid Award

---

From: Stone, Tucker - Xylem <Tucker.Stone@xylem.com>
Sent: Tuesday, January 9, 2024 3:57 PM
To: Kate.White <kate.white@kiewit.com>
Cc: Button, Susan - Xylem <Susan.Button@xylem.com>; Weemes, Bryan - Xylem <Bryan.Weemes@xylem.com>; Pastors, Francis - Xylem <Francis.Pastors@xylem.com>
Subject: [External]RE: **URGENT** City of Sherman Project - Xylem Sanitaire/Flygt Material Contracts - Bid Award

> You don't often get email from tucker.stone@xylem.com. Learn why this is important

Hello Kate,

The adder price for adding stainless steel droplegs and cooling loops to the aeration grids is **$143,000**. The only changes that we're making to our submitted scope package is that we are now providing the stainless steel cooling loop and dropleg piping while also incorporating the piping layout into the overall layout of each grid.

Carollo has also asked us to provide an adder price for dropleg and cooling loop piping. I told them that I will be sending the adder price through Kiewit. Carollo mentioned that we would need to supply piping up to the water elevation of the aeration basins, or 3' below the walkway elevation. See attached email.

In order to pride an adder price for the same option with the Sludge Storage Tank, we will need more information to determine the length of cooling loop piping required. The parameters need are max wastewater temperature and max blower discharge temperature.

Please let us know if there are any questions.

Thanks,

Tucker Stone
Xylem Application Engineer – Sanitaire Products
247 W Freshwater Way, Suite 200
Milwaukee, WI 53204
O: +1.414.365.2374 M: +1.262.289.7598
Tucker.Stone@xylem.com

From: Pastors, Francis - Xylem <Francis.Pastors@xylem.com>
Sent: Monday, January 8, 2024 2:13 PM
To: kate.white@kiewit.com
Cc: Stone, Tucker - Xylem <Tucker.Stone@xylem.com>; Button, Susan - Xylem <Susan.Button@xylem.com>; Weemes,

Bryan - Xylem <Bryan.Weemes@xylem.com>
Subject: **URGENT** City of Sherman Project - Xylem Sanitaire/Flygt Material Contracts - Bid Award

Kate,

Happy New Year!

Thanks for the "DRAFT" contract, including both the Flygt & Sanitaire Products proposed on the Sherman, TX Project.

Bryan had mentioned that you are waiting on two items:

1. Mark-ups and comments to the "DRAFT" Contract: Attached is a copy of our proposal, which includes the proposed make-ups. Specifically reference pages 23-90 of the pdf. It also includes our general scope letter and clarifications.

2. Adder for SS drops/cooling piping in the Sanitire Proposal: We are currently looking at the layout and associated costing. We should have this for you in the next couple days.

Let us know if you have any questions or concerns.

Thanks,

Francis

Francis Pastors, PE
Xylem Territory Manager – Sanitaire Products
247 W. Freshwater Way, Suite 200
Milwaukee, WI 53204
francis.pastors@xylem.com
414-207-5465

CONFIDENTIALITY NOTICE: This e-mail, including any attachments and/or linked documents, is intended for the sole use of the intended addressee and may contain information that is privileged, confidential, proprietary, or otherwise protected by law. Any unauthorized review, dissemination, distribution, or copying is prohibited. If you have received this communication in error, please contact the original sender immediately by reply email and destroy all copies of the original message and any attachments. Please note that any views or opinions presented in this e-mail are solely those of the author and do not necessarily represent those of Xylem Inc..

2024.01.11 Process Design Task Force

Date:	1/11/2024
Time:	2:00 - 3:00 PM CST
Location:	MS Teams
Prepared by:	CMAR Odrowski

Sherman South WWTP

Process Design Task Force Meeting

ATTENDEES

ATTENDED	NAME	Role	Organization
Yes	Michael Odrowski	Engineering Manager	Kiewit
Yes	Nathan Whiddon		City of Sherman
	Megan Martin		Carollo
Yes	BK Zaveri		Mead & Hunt
	Colin Bunker		Kiewit
Yes	Sherri van der Wage		Plummer
Yes	Brenna Wagner		Carollo
Yes	Nathan Zaugg		Carollo
Yes	Freddy Mena		Mead & Hunt
	Darcy Sachs		Carollo
Yes	Paula Monaco		Plummer
Yes	Charlotte Smith		Mead & Hunt
Yes	Ron Mick		Pape-Dawson
Yes	Alan Davis		Plummer
Yes	Tom Pruitt		City of Sherman
	Clint Philpot		City of Sherman
	Paul Sigle		GTUA
	David Gudal		Plummer
	Nichole Murphy		GTUA
	Kory Kyllo		Kiewit
	Toby Flinn		Pape-Dawson
	Joe Castillo		Pape-Dawson
Yes	Quentin Geile		Plummer
Yes	Ruby Diaz		Carollo
Yes	Shannon Saramaa		Mead & Hunt
Yes	Amir Shokouhi		Pape-Dawson
	Hugh Brightwell		Pape-Dawson
Yes	Joe Schuler		Kiewit
	Jim Goyer		Kiewit
Yes	Chester Wilson		City of Sherman
	Chris Swonke		Mead & Hunt
Yes	Andrew Lattof		Kiewit

Yes	Thomas Young		Plummer
	Mark Perkins		Mead & Hunt
Yes	Russ Ferlita		Mead & Hunt
Yes	Charles Wampler		Kiewit
Yes	Tyler Bly		Kiewit
Yes	Jeff Rigdon		City of Sherman

Legend
Previous Meeting Notes
Current Meeting Notes
Action Items

1. **Safety**
   a. Safety Moment

2. **Design**
   a. Deliverables in Review
      1) **65% Drawings**
      2) **M Sheets Review, Walk Thru Highlighting Differences from Previous Bid Pkgs**
         i. **Bioreactor Aeration Basins**
            1) **Effluent Pipe, Ruby Dwg, email 1/11/2024**
            2) **Al M Odrowski will forward to Tyler Bly for review.**
         ii. **Influent Splitter Box**
         iii. **Bioreactor Blower Room**
         iv. **Membrane Blowers**
         v. **Carbon Storage Tanks**, piping connections now shown, addl detail from previous drawing version
         vi. **Diversion Structure**, one less gate and penetration, less cost
         vii. EQ Basin
         viii. **EQ Basin Flow Control Valve**, 10' dia MH instead of vault, less cost
         ix. **EQ Flow Meter**, 10' dia MH instead of vault, less cost
         x. **EQ Basin Mixing System**
         xi. **Effluent Filters**, less-steep stairs are needed for Aqua-Aerobics equipment, similar to stairs in structural drawings, Al Plummer to initiate stair revision.
         xii. **Relift Pump Station**, upcoming bid, new item
            1) Axial flow pumps
         xiii. RAS Discharge Piping
         xiv. **Influent Pump Station**
         xv. **IPS Electrical Structure**
         xvi. **PTU**
         xvii. **Blower Building**
         xviii. **Sludge Storage Tank**

   b. Deliverable Pkgs for Bidding
      1) **Preview Process Mechanical Pkg BP08-001**
         i. **Bid Opening Date 1/24/2024**
            1) **Addendum No. 1 Out**
            2) **Addendum No. 2 Forthcoming**
         ii. *Status, Contents*
            1) *Add peristaltic metering pumps and FRP tanks to bid package*
   c. Upcoming Deliverables
      1) Design Challenges/Support Required
      2) DN Tank Responses
         i. Submitted, under review
      3) Tank Underdrain Design
         i. Chris- Detail being drafted, DN foundation design needed to finalize drain
      4) Tank Under-Slab Piping
         i. Under development, coordinate w/ DN and buried yard piping
      5) Update on Tank Coating Spec
         i. Vinyl Ester
            1) Open, under consideration for inclusion in coating spec
      6) Schedule
         i.

3. **Procurement,**

a. Active Packages
    1) Scope Changes
        i. DN Tank
            1) PHi Air System, specification issued, adder
            2) Fourth nozzle needed, wash down, adder
            3) Handrail EQ, tie-off could be added, considering washdown operations before moving forward w/ deletion
            4) Upsized overflow inlet weir
        ii. Aerzen Blowers
            1) Vendor provided vibration switch, stops on high vibration, consistent w/ P&IDs
            2) 50-MPH enclosure
        iii. RAS Pumps Discharge Elbow, GPS, Al Quentin will provide followup, 12-in to 20-in
        iv. Submersible Mixers, RAS PS, Xylem, Al Quentin will provide followup
        v. Rotary Lobe Pumps, Vogelsang
            1) 316 SS baseplates Shannon followup
            2) Duty Points, 75 gpm ==> 200 gpm, 45 TDH
        vi. Aeration System, Fine Bubble Disc Diffusers, 46 51 47 Biological Aeration Basin, Xylem/Sanitaire
            1) Dropleg and cooling loop piping, Al Ruby followup to show dropleg connection for piping to be furnished by Xylem/Sanitaire on Proc Mech PKG BP08-001, for contractor coordination and scope clarity. Drawing revision to be included in Add 2 or Add 3.
            2) Stainless piping will be 143K adder to Xylem.
        vii. Aeration System, Flexible Membrane Disk Diffusers, 46 51 33, Sludge Storage Tank, Xylem/Sanitaire
            1) Max wastewater temp and max blower discharge temp needed before length of cooling loop piping can be determined, Al Ruby Followup w/ Xylem

b. Packages In Development
    1) None

4. **Work Planning and Construction Schedule**
    a. Work Plans
    b. Pre-Activity Meetings
    c. Schedule Highlights

5. **Submittals**
    a.

6. **RFIs**
    a.

7. **Quality**
    a. Source Inspection
    b. Material Receiving
    c. Non-Conformance
    d. Issues/Concerns

8. **As-Built and Redlines**
    a. Intent of Meeting

9. **Field Order/WCD/Design Modifications**
    a. Intent of Meeting

10. **Value Engineering**
    a.

11. **Attachments:**
    a.

Action Items

ID	Description	Assigned To	Due	Complete

Decision Points

ID	Description	Location	Date

2024.01.18 Process Design Task Force

Thursday, January 18, 2024 12:39 PM

Date:	1/18/2024
Time:	2:00 - 3:00 PM CST
Location:	MS Teams
Prepared by:	CMAR M Odrowski

Sherman South WWTP

Process Design Task Force Meeting

ATTENDEES

ATTENDED	NAME	Role	Organization
Yes	Michael Odrowski	Engineering Manager	Kiewit
Yes	Nathan Whiddon		City of Sherman
	Megan Martin		Carollo
	BK Zaveri		Mead & Hunt
	Colin Bunker		Kiewit
Yes	Sherri van der Wage		Plummer
Yes	Brenna Wagner		Carollo
Yes	Nathan Zaugg		Carollo
Yes	Freddy Mena		Mead & Hunt
	Darcy Sachs		Carollo
Yes	Paula Monaco		Plummer
Yes	Charlotte Smith		Mead & Hunt
Yes	Ron Mick		Pape-Dawson
	Alan Davis		Plummer
Yes	Tom Pruitt		City of Sherman
	Clint Philpot		City of Sherman
	Paul Sigle		GTUA
	David Gudal		Plummer
	Nichole Murphy		GTUA
	Kory Kyllo		Kiewit
	Toby Flinn		Pape-Dawson
	Joe Castillo		Pape-Dawson
Yes	Quentin Geile		Plummer
Yes	Ruby Diaz		Carollo
	Shannon Saramaa		Mead & Hunt
Yes	Amir Shokouhi		Pape-Dawson
	Hugh Brightwell		Pape-Dawson
	Joe Schuler		Kiewit

	Jim Goyer		Kiewit
Yes	Chester Wilson		City of Sherman
	Chris Swonke		Mead & Hunt
Yes	Andrew Lattof		Kiewit
	Thomas Young		Plummer
	Mark Perkins		Mead & Hunt
	Russ Ferlita		Mead & Hunt
	Charles Wampler		Kiewit
	Tyler Bly		Kiewit
Yes	Jeff Rigdon		City of Sherman
Yes	Russ Varin		

Legend
Previous Meeting Notes
Current Meeting Notes
Action Items

1. **Safety**
   a. Safety Moment

2. **Design**
   a. Deliverables in Review
      1) **65% Drawings**
      2) **M Sheets Review, Walk Thru Highlighting Differences from Previous Bid Pkgs**
         i. **Bioreactor Aeration Basins**
            1) **Effluent Pipe, Ruby Dwg, email 1/11/2024**
            2) **Al M Odrowski will forward to Tyler Bly for review. COMPLETED**
         ii. **Influent Splitter Box**
         iii. **Bioreactor Blower Room**
         iv. **Membrane Blowers**
         v. **Carbon Storage Tanks**, piping connections now shown, addl detail from previous drawing version
         vi. **Diversion Structure**, one less gate and penetration, less cost
         vii. EQ Basin
         viii. **EQ Basin Flow Control Valve**, 10' dia MH instead of vault, less cost
         ix. **EQ Flow Meter**, 10' dia MH instead of vault, less cost
         x. **EQ Basin Mixing System**
         xi. **Effluent Filters**, less-steep stairs are needed for Aqua-Aerobics equipment, similar to stairs in structural drawings, **Al Plummer to initiate stair revision.**
         xii. **Relift Pump Station**, upcoming bid, new item
            1) Axial flow pumps
         xiii. RAS Discharge Piping
         xiv. **Influent Pump Station**
         xv. **IPS Electrical Structure**
         xvi. **PTU**
         xvii. **Blower Building**
         xviii. **Sludge Storage Tank**

   b. Deliverable Pkgs for Bidding
      1) **Preview Process Mechanical Pkg BP08-001**
         i. **Bid Opening Date 1/24/2024**
            1) **Addendum No. 1 Out**
            2) **Addendum No. 2 Forthcoming**
         ii. *Status, Contents*
            1) *Add peristaltic metering pumps and FRP tanks to bid package*
   c. Upcoming Deliverables
      1)

GPS
20-in IPS Discharge 5600 GPM Elbows (2), Quentin/BK
20-in IPS Discharge 2800 GPM Elbows (2), Quentin/BK
20-in RAS Discharge Elbows (3), Quentin

Xylem/Sanitaire
SS Piping for Sludge Storage Tank, M&H, Freddy
Max Blower Temp
Max Wastewater Temp

Huber
Screw Auger Chute, Cooper
Huber will be providing at no addl cost, included in spec

S&L
Grit Chute, Ross Varin
Add 2 BP-08-001 includes chute and support

Aqua Aerobics
Stairs, safety issue due to steepness, Charlotte
Need acceptable stair details

1) Design Challenges/Support Required
2) Tank Underdrain Design
   i. Chris- Detail being drafted, DN foundation design needed to finalize drain
3) Tank Under-Slab Piping
   i. Under development, coordinate w/ DN Tank and buried yard piping
4) Update on Tank Coating Spec
   i. Vinyl Ester
      1) Open, under consideration for inclusion in coating spec
5) Schedule
   i.

3. **Procurement,**
   a. Active Packages
      1) Scope Changes
         i. DN Tank
            1) PHi Air System, specification issued, adder
            2) Fourth nozzle needed, wash down, adder
            3) Handrail EQ, tie-off could be added, considering washdown operations before moving forward w/ deletion
            4) Upsized overflow inlet weir
         ii. Aerzen Blowers
            1) Vendor provided vibration switch, stops on high vibration, consistent w/ P&IDs
            2) 50-MPH enclosure
         iii. RAS Pumps Discharge Elbow, GPS, AI Quentin will provide followup, 12-in to 20-in
         iv. Submersible Mixers, Xylem, **AI Quentin will provide followup**
         v. Aeration System, Fine Bubble Disc Diffusers, 46 51 47 Biological Aeration Basin, Xylem/Sanitaire
            1) Dropleg and cooling loop piping, AI Ruby followup to show dropleg connection for piping to be furnished by Xylem/Sanitaire on Proc Mech PKG BP08-001, for contractor coordination and scope clarity. Drawing revision to be included in Add 2 or Add 3.
            2) Stainless piping will be 143K adder to Xylem.
         vi. Aeration System, Flexible Membrane Disk Diffusers, 46 51 33, Sludge Storage Tank, Xylem/Sanitaire
            1) Max wastewater temp and max blower discharge temp needed before length of cooling loop piping can be determined, AI Freddy Followup w/

b. Packages In Development
   1) None

4. **Work Planning and Construction Schedule**
   a. Work Plans
   b. Pre-Activity Meetings
   c. Schedule Highlights

5. **Submittals**
   a.

6. **RFIs**
   a.

7. **Quality**
   a. Source Inspection
   b. Material Receiving
   c. Non-Conformance
   d. Issues/Concerns

8. **As-Built and Redlines**
   a. Intent of Meeting

9. **Field Order/WCD/Design Modifications**
   a. Intent of Meeting

10. **Value Engineering**
    a.

11. **Attachments:**
    a.

Action Items

ID	Description	Assigned To	Due	Complete

Decision Points

ID	Description	Location	Date

2024.01.25 Process Design Task Force

Tuesday, January 23, 2024 7:11 PM

Date:	1/25/2024
Time:	2:00 - 3:00 PM CST
Location:	MS Teams
Prepared by:	CMAR M Odrowski

Sherman South WWTP

Process Design Task Force Meeting

ATTENDEES

ATTENDED	NAME	Role	Organization
Yes	Michael Odrowski	Engineering Manager	Kiewit
	Nathan Whiddon		City of Sherman
	Megan Martin		Carollo
	BK Zaveri		Mead & Hunt
	Colin Bunker		Kiewit
	Sherri van der Wage		Plummer
Yes	Brenna Wagner		Carollo
	Nathan Zaugg		Carollo
Yes	Freddy Mena		Mead & Hunt
	Darcy Sachs		Carollo
Yes	Paula Monaco		Plummer
Yes	Charlotte Smith		Mead & Hunt
Yes	Ron Mick		Pape-Dawson
Yes	Alan Davis		Plummer
Yes	Tom Pruitt		City of Sherman
	Clint Philpot		City of Sherman
	Paul Sigle		GTUA
Yes	David Gudal		Plummer
	Nichole Murphy		GTUA
	Kory Kyllo		Kiewit
	Toby Flinn		Pape-Dawson
	Joe Castillo		Pape-Dawson
Yes	Quentin Geile		Plummer
Yes	Ruby Diaz		Carollo
	Shannon Saramaa		Mead & Hunt
Yes	Amir Shokouhi		Pape-Dawson
Yes	Hugh Brightwell		Pape-Dawson
	Joe Schuler		Kiewit

	Jim Goyer		Kiewit
	Chester Wilson		City of Sherman
	Chris Swonke		Mead & Hunt
Yes	Andrew Lattof		Kiewit
	Thomas Young		Plummer
	Mark Perkins		Mead & Hunt
	Russ Ferlita		Mead & Hunt
	Charles Wampler		Kiewit
	Tyler Bly		Kiewit
	Jeff Rigdon		City of Sherman
	Russ Varin		Mead & Hunt
Yes	Brian Beach		Plummer
Yes	Kevin Colwell		
Yes	Kate White		Kiewit

Legend
Previous Meeting Notes
Current Meeting Notes
Action Items

1. **Safety**
   a. **Safety Moment**

2. **Design**
   a. **Bioreactor Aeration Basins**
      1) **Effluent Pipe, Update below, coordination w/ IFC structural dwgs. Conflict avoided w/ wall construction joint. Wall pipe moving to south in IFC. Changed dwg to IFC north.**

2)

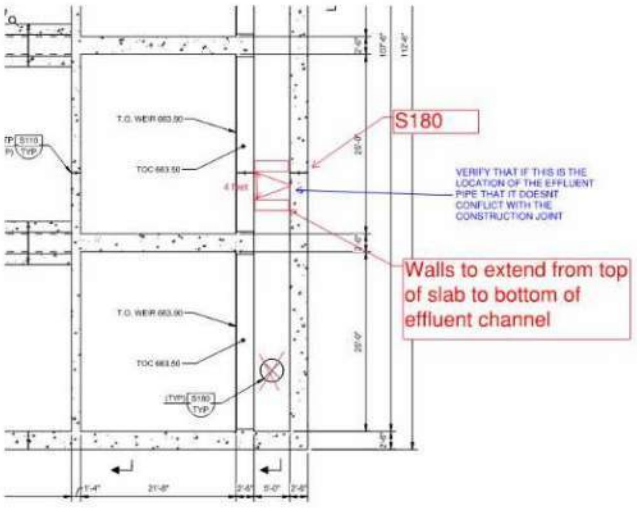

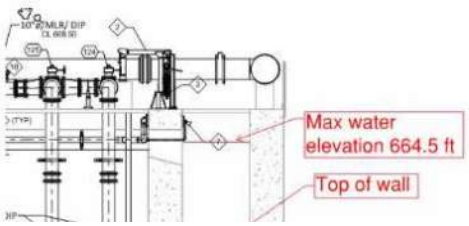

3)

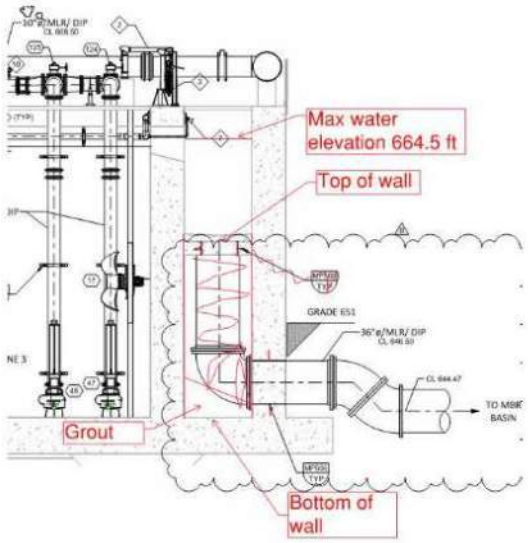

b. Deliverable Pkgs for Bidding
   1) **Process Mechanical Pkg BP08-001**
      i. **Bid Opening Date 1/24/2024**
         1) **Addendum No. 1 Issued**
         2) **Addendum No. 2 Issued**

c. Early Procurement Equipment Packages
   1) **Aqua Aerobics, Effluent Filters, safety issue due to steepness, similar to stairs in structural drawings, Stair revision under Aqua Aerobics pending- Al Charlotte, open item**

   2) **Aeration System, Flexible Membrane Disk Diffusers, 46 51 33, Sludge Storage Tank, Xylem/Sanitaire**
      1) **Max wastewater temp and max blower discharge temp needed before length of cooling loop piping can be determined, Al Freddy/Shannon Followup w/ Xylem, early next week. Will be CO w/ Xylem. Al Shannon confirm if transition was correctly indicated in BP02-001.**

d.

Sludge Storage Tank Blowers	Model: D 62 S DN 200		
Performance Data:		Design	Min
Intake volume, handled at intake condition	cfm	2,089	381
Volume handled at normal condition (dry) per ASME	scfm	1,745	319
Mass flow	lb/h	8,219	1,501
Density at inlet conditions	lb/cf	0.066	0.066
Relative humidity	Φ	95%	95%
Inlet pressure (abs.)	psia	14.30	14.30
Discharge pressure (abs.)	psia	23.29	23.29
Pressure difference	psig	9.0	9.0
Intake temperature	°F	109	109
Discharge temperature	°F	221	255

   1) **Xylem, submersible mixers RAS PS (2), Al Quentin will provide followup, Refer to email 1/19/24 and Patrick Palacios email 1/5/24. Al Kate to obtain pricing from Bryan Weemes.**

      i.

   3) **Aeration System, Fine Bubble Disc Diffusers, 46 51 47 Biological Aeration Basin, Xylem/Sanitaire**
      1) **Dropleg and cooling loop piping, Al Ruby followup to show dropleg connection for piping to be furnished by Xylem/Sanitaire on Proc Mech PKG BP08-001, for contractor coordination and scope clarity. Drawing revision to be included in Add 2. COMPLETED**

e. Packages In Development
   1) None

3. **Work Planning and Construction Schedule**
    a. Work Plans
    b. Pre-Activity Meetings
    c. Schedule Highlights

4. **Submittals**
    a.

5. **RFIs**
    a.

6. **Quality**
    a. Source Inspection
    b. Material Receiving
    c. Non-Conformance
    d. Issues/Concerns

7. **As-Built and Redlines**
    a. Intent of Meeting

8. **Field Order/WCD/Design Modifications**
    a. Intent of Meeting

9. **Value Engineering**
    a.

10. **Attachments:**
    a.

Action Items

ID	Description	Assigned To	Due	Complete

Decision Points

ID	Description	Location	Date

Charles.Wampler

From: Kate.White
Sent: Monday, January 29, 2024 10:41 AM
To: Andrew.Lattof; Charles.Wampler; Michael.Odrowski
Subject: Fwd: [External]RE: City of Sherman - MC Section 9 Discussion

FYI -

Get Outlook for iOS

From: Stone, Tucker - Xylem <Tucker.Stone@xylem.com>
Sent: Friday, January 26, 2024 3:00 PM
To: Kate.White <Kate.White@kiewit.com>; Ruddy, Heidi - Xylem <Heidi.Ruddy@xylem.com>
Cc: Pastors, Francis - Xylem <Francis.Pastors@xylem.com>; Button, Susan - Xylem <Susan.Button@xylem.com>
Subject: RE: [External]RE: City of Sherman - MC Section 9 Discussion

Hi Kate,

The adder price for adding stainless steel droplegs and cooling loops to the aeration grid in the sludge storage tank is **$38,000.** Like with the aeration tanks, the only changes that we're making to our submitted scope package is that we are now providing the stainless steel cooling loop and dropleg piping while also incorporating the piping layout into the overall layout of the grid.

Please let me know if you have any questions and have a great weekend!

Tucker Stone
Xylem Application Engineer – Sanitaire Products
247 W Freshwater Way, Suite 200
Milwaukee, WI 53204
O: +1.414.365.2374 M: +1.262.289.7598
Tucker.Stone@xylem.com

From: Kate.White <Kate.White@kiewit.com>
Sent: Friday, January 26, 2024 11:16 AM
To: Stone, Tucker - Xylem <Tucker.Stone@xylem.com>; Ruddy, Heidi - Xylem <Heidi.Ruddy@xylem.com>
Cc: Pastors, Francis - Xylem <Francis.Pastors@xylem.com>; Button, Susan - Xylem <Susan.Button@xylem.com>
Subject: RE: [External]RE: City of Sherman - MC Section 9 Discussion

Tucker,

Yes, they are still working on all the information, but I was told 255F is the maximum discharge temperature the blower will reach. They promised early next week for the max wastewater temperature. Bryan Weemes is working on pricing for the mixer change so we'll try to get both of these addressed in Change Order 01.

Once you do have the max wastewater temp do you have an idea of about how long it will take to price?

Thanks!

Kate White
Supply Chain Specialist III

CITY OF SHERMAN CMAR
302 Cliff Hestand Sherman TX, 75090
Cell: (480) 521-3312
Kate.white@kiewit.com

From: Stone, Tucker - Xylem <Tucker.Stone@xylem.com>
Sent: Friday, January 26, 2024 10:03 AM
To: Kate.White <Kate.White@kiewit.com>; Ruddy, Heidi - Xylem <Heidi.Ruddy@xylem.com>
Cc: Pastors, Francis - Xylem <Francis.Pastors@xylem.com>; Button, Susan - Xylem <Susan.Button@xylem.com>
Subject: RE: [External]RE: City of Sherman - MC Section 9 Discussion

Kate,

I forgot to ask. Would you still like to add the SS dropleg and cooling loop piping for the sludge storage tank into our scope? I'm assuming your engineering group is still working on getting the info I requested but I just want to confirm that this would be a change order on top of the price included in the PO.

Thanks,

Tucker Stone
Xylem Application Engineer – Sanitaire Products
247 W Freshwater Way, Suite 200
Milwaukee, WI 53204
O: +1.414.365.2374 M: +1.262.289.7598
Tucker.Stone@xylem.com

From: Kate.White <Kate.White@kiewit.com>
Sent: Friday, January 26, 2024 10:40 AM
To: Stone, Tucker - Xylem <Tucker.Stone@xylem.com>; Ruddy, Heidi - Xylem <Heidi.Ruddy@xylem.com>
Cc: Pastors, Francis - Xylem <Francis.Pastors@xylem.com>; Button, Susan - Xylem <Susan.Button@xylem.com>
Subject: RE: [External]RE: City of Sherman - MC Section 9 Discussion

Great. Thank you, Tucker!

@Ruddy, Heidi - Xylem, also please let me know what day/time works best for you next week for a brief contract kickoff meeting so we can introduce our Doc Controller. I'm pretty flexible Wed-Fri.

Thanks,

Kate White
Supply Chain Specialist III

CITY OF SHERMAN CMAR
302 Cliff Hestand Sherman TX, 75090
Cell: (480) 521-3312
Kate.white@kiewit.com

From: Stone, Tucker - Xylem <Tucker.Stone@xylem.com>
Sent: Friday, January 26, 2024 9:34 AM
To: Kate.White <Kate.White@kiewit.com>
Cc: Pastors, Francis - Xylem <Francis.Pastors@xylem.com>; Button, Susan - Xylem <Susan.Button@xylem.com>; Ruddy, Heidi - Xylem <Heidi.Ruddy@xylem.com>
Subject: RE: [External]RE: City of Sherman - MC Section 9 Discussion

Kate,

I've copied our PM, Heidi Ruddy. She'll be able to give you the email addresses of the people who will need access to Teambinder.

Thanks,

Tucker Stone
Xylem Application Engineer – Sanitaire Products
247 W Freshwater Way, Suite 200
Milwaukee, WI 53204
O: +1.414.365.2374 M: +1.262.289.7598
Tucker.Stone@xylem.com

From: Stone, Tucker - Xylem
Sent: Friday, January 26, 2024 10:30 AM
To: Kate.White <Kate.White@kiewit.com>
Cc: Pastors, Francis - Xylem <Francis.Pastors@xylem.com>; Button, Susan - Xylem <Susan.Button@xylem.com>
Subject: RE: [External]RE: City of Sherman - MC Section 9 Discussion

Hi Kate,

I'm just confirming who the PM will be on our end. They will reach out to you soon to coordinate a kickoff meeting.

Thanks,

Tucker Stone
Xylem Application Engineer – Sanitaire Products
247 W Freshwater Way, Suite 200
Milwaukee, WI 53204

O: +1.414.365.2374 M: +1.262.289.7598
Tucker.Stone@xylem.com

From: Kate.White <Kate.White@kiewit.com>
Sent: Thursday, January 25, 2024 9:17 AM
To: Button, Susan - Xylem <Susan.Button@xylem.com>; Stone, Tucker - Xylem <Tucker.Stone@xylem.com>
Cc: Pastors, Francis - Xylem <Francis.Pastors@xylem.com>
Subject: RE: [External]RE: City of Sherman - MC Section 9 Discussion

Hi Susan,

The final contract has been sent to you via DocuSign (COSK_SouthWWTP.Procurement@kiewit.com) for signature. We'll just need the bond and insurance once we have signatures done.

@Stone, Tucker - Xylem, when would be a good day/time for you to have a contract kickoff meeting so we can introduce our Document Controller? We'll also need the email addresses of the individuals who need access to Teambinder for uploading submittals. I have time tomorrow or Wed-Fri next week. Please let me know what works best for you.

Thanks!

Kate White
Supply Chain Specialist III

CITY OF SHERMAN CMAR
302 Cliff Hestand Sherman TX, 75090
Cell: (480) 521-3312
Kate.white@kiewit.com

From: Button, Susan - Xylem <Susan.Button@xylem.com>
Sent: Thursday, January 18, 2024 12:32 PM
To: Kate.White <Kate.White@kiewit.com>
Subject: RE: [External]RE: City of Sherman - MC Section 9 Discussion

Kate – correct but I have attached and updated 2024 version of the W-9

Yes I will be signing

Thank you.

Regards,

Susan M. Button
Xylem
Senior Manager, Contracts Management, Americas
Legal Department

M: +1 508 207 0966

From: Kate.White <Kate.White@kiewit.com>
Sent: Thursday, January 18, 2024 2:25 PM
To: Button, Susan - Xylem <Susan.Button@xylem.com>
Subject: RE: [External]RE: City of Sherman - MC Section 9 Discussion

Hi Susan,

Is this W9 attached still correct and you'll be signing the final contract, correct?

Thanks!

Kate White
Supply Chain Specialist III

CITY OF SHERMAN CMAR
302 Cliff Hestand Sherman TX, 75090
Cell: (480) 521-3312
Kate.white@kiewit.com

From: Button, Susan - Xylem <Susan.Button@xylem.com>
Sent: Wednesday, January 17, 2024 10:56 AM
To: Kate.White <Kate.White@kiewit.com>; Stone, Tucker - Xylem <Tucker.Stone@xylem.com>
Cc: Pastors, Francis - Xylem <Francis.Pastors@xylem.com>
Subject: RE: [External]RE: City of Sherman - MC Section 9 Discussion

Perfect. Saw that in attachment, just wanted to make sure.

Thanks again Kate.

Regards,

Susan M. Button
Xylem
Senior Manager, Contracts Management, Americas
Legal Department

M: +1 508 207 0966

From: Kate.White <Kate.White@kiewit.com>
Sent: Wednesday, January 17, 2024 12:53 PM
To: Button, Susan - Xylem <Susan.Button@xylem.com>; Stone, Tucker - Xylem <Tucker.Stone@xylem.com>
Cc: Pastors, Francis - Xylem <Francis.Pastors@xylem.com>
Subject: RE: [External]RE: City of Sherman - MC Section 9 Discussion

Susan,

Great. Thank you.

I believe we were in agreement on the following:

SECTION 9. INDEMNIFICATION

a) Seller specifically obligates itself to the Indemnitees as follows:

(i) Seller shall defend and indemnify the Indemnitees against and save them harmless from any and all claims, suits, liability or expense (including reasonable attorneys fees ~~from but not limited to attorneys, engineers, architects, and other professionals~~ as well as all court or arbitration or other dispute resolution costs) arising from any actual or alleged infringement of any patent or patent right, copyright, trademark or other intellectual property right, arising in connection with Seller's performance of this Agreement.

(ii) Seller shall defend and indemnify the Indemnitees against and save them harmless from any and all claims, suits, liability or expense (including reasonable attorneys ~~fees from but not limited to attorneys, engineers, architects, and other professionals~~ as well as all court or arbitration or other dispute resolution costs) for damage to third party property and injuries to persons, including death, to the extent arising from Seller's performance of this Agreement, unless caused by the sole negligence of the Indemnitees.

(iii) To the extent Contractor is not in breach of this Agreement, Seller shall defend and indemnify the Indemnitees against and save them harmless from any and all claims for payment, liens, security interests, levies, garnishments or encumbrances filed or made by Seller's subcontractors or suppliers related to the Work, including all expenses and reasonable attorneys' fees any Indemnitee incurs in the discharge or defense against such claims.

From: Button, Susan - Xylem <Susan.Button@xylem.com>
Sent: Wednesday, January 17, 2024 10:27 AM
To: Kate.White <Kate.White@kiewit.com>; Stone, Tucker - Xylem <Tucker.Stone@xylem.com>
Cc: Pastors, Francis - Xylem <Francis.Pastors@xylem.com>
Subject: [External]RE: City of Sherman - MC Section 9 Discussion

Thanks Kate, below is acceptable. Where did we land with 9 a)(iii)?

Regards,

Susan M. Button
Xylem
Senior Manager, Contracts Management, Americas
Legal Department

M: +1 508 207 0966

xylem
Let's Solve Water

From: Kate.White <Kate.White@kiewit.com>
Sent: Wednesday, January 17, 2024 11:55 AM

To: Button, Susan - Xylem <Susan.Button@xylem.com>; Stone, Tucker - Xylem <Tucker.Stone@xylem.com>
Cc: Pastors, Francis - Xylem <Francis.Pastors@xylem.com>
Subject: RE: City of Sherman - MC Section 9 Discussion

Hi All,

Thank you again for your time yesterday. Please see attached with the proposed revision to Section 9(c):

c) Despite Sections 9(a)(i) through 9(a)(vii), Contractor shall have the right to be represented in such defense by counsel of its own choice at its own expense, and such election shall not in any way limit Seller's obligations under this Agreement. If Seller fails to perform any of its obligations set forth in this Section 9 (or other sections of this Agreement where Seller has defense, indemnity and hold harmless obligations), including the diligent defense of any suit or proceeding, Contractor may, in its reasonable discretion, do the following: (i) assume the defense of such suit or proceeding; and/or (ii) settle the claim forming the basis of the suit or proceeding, without Seller's consent. Contractor shall provide written notice to Seller of its election to assume the defense of such suit or proceeding and/or settle any such claim forming the basis of the suit or proceeding. Contractor's election to assume the defense of suit or proceeding and/or settle any such claim is without prejudice to Seller's right to the representation and/or defense of itself from other third party claims., ~~but after giving Seller prior, written notice.~~ If Contractor acts under (i) and/or (ii), Seller shall not be relieved of its obligation under this Section 9, and as such, Seller shall reimburse Contractor ~~the damages,~~ for it's costs and expenses that Contractor incurs related to such suit of proceeding, including any settlement amount, award of the court, court costs and reasonable attorneys' fees.

@Tucker.Stone@xylem.com,
Michael Odrowski followed up with Ruby Diaz again yesterday for the information you need on the sludge storage tank adder.

Pending these two items above I believe we're ready for execution.

Thanks,

Kate White
Supply Chain Specialist III

CITY OF SHERMAN CMAR
302 Cliff Hestand Sherman TX, 75090
Cell: (480) 521-3312
Kate.white@kiewit.com

Sherman
BROAD HORIZONS | WWTP CMAR

-----Original Appointment-----
From: Kate.White <Kate.White@kiewit.com>
Sent: Monday, January 15, 2024 9:49 AM
To: Susan.Button@xylem.com; Darrington.Parrish
Cc: Francis.Pastors@xylem.com; Tucker.Stone@xylem.com; Bryan.Weemes@xylem.com
Subject: City of Sherman - MC Section 9 Discussion
When: Tuesday, January 16, 2024 11:00 AM-12:00 PM (UTC-07:00) Mountain Time (US & Canada).
Where:

Microsoft Teams meeting

Join on your computer, mobile app or room device
Click here to join the meeting

Meeting ID: 283 565 444 493
Passcode: chqGZq
Download Teams | Join on the web

Or call in (audio only)

+1 402-979-7582,,600337654# United States, Omaha

Phone Conference ID: 600 337 654#
Find a local number | Reset PIN

Learn More | Meeting options

CONFIDENTIALITY NOTICE: This e-mail, including any attachments and/or linked documents, is intended for the sole use of the intended addressee and may contain information that is privileged, confidential, proprietary, or otherwise protected by law. Any unauthorized review, dissemination, distribution, or copying is prohibited. If you have received this communication in error, please contact the original sender immediately by reply email and destroy all copies of the original message and any attachments. Please note that any views or opinions presented in this e-mail are solely those of the author and do not necessarily represent those of Xylem Inc..

Charles.Wampler

From: Kate.White
Sent: Monday, February 5, 2024 10:37 AM
To: Charles.Wampler; Michael.Odrowski
Cc: Andrew.Lattof
Subject: FW: [External]RE: City of Sherman, TX South WWTP MBR - Submersible Mixers RAS PS - REVISED Quote - RAS Mixers
Attachments: 2023-DAL-0577,A3,V1 (Sherman S. WWTP - MBR Equipment Package 4) 2.5.24.pdf

FYI – total is $19,880.30.

From: Weemes, Bryan - Xylem <Bryan.Weemes@xylem.com>
Sent: Monday, February 5, 2024 9:16 AM
To: Kate.White <Kate.White@kiewit.com>
Subject: RE: [External]RE: City of Sherman, TX South WWTP MBR - Submersible Mixers RAS PS - REVISED Quote - RAS Mixers

Hi Kate,

Please see attached revised quotation.

Please disregard quote # 2023-DAL-0577 Alternate 2, Version 1.

I received your voice-mail this morning and you're correct-- the variance was in the additional freight charge for the change-order (2 x RAS Mixers/Accessories).

Thanks,

Bryan Weemes
Engineered & Aftermarket Sales
214-952-9301 | Mobile
bryan.weemes@xylem.com

From: Kate.White <Kate.White@kiewit.com>
Sent: Friday, February 2, 2024 5:12 PM
To: Weemes, Bryan - Xylem <Bryan.Weemes@xylem.com>
Subject: RE: [External]RE: City of Sherman, TX South WWTP MBR - Submersible Mixers RAS PS - REVISED Quote - RAS Mixers

Hi Bryan,

Sorry I got wrapped up on another call this afternoon and didn't get the chance to call you back. I'll try you first thing on Monday.

Mixers in the contract are currently $255,599.70 and with the additions below were at $273,683.70. However, the quote sheet says $270,547.00 so I'm lost on the discrepancy there. Maybe it was a discount for freight or startup? But we're off by $3,136.70.

Anyways I'll call you on Monday and we'll get it figured out. Have a nice weekend!

Thanks,

Kate White
Supply Chain Specialist III

CITY OF SHERMAN CMAR
302 Cliff Hestand Sherman TX, 75090
Cell: (480) 521-3312
Kate.white@kiewit.com

From: Weemes, Bryan - Xylem <Bryan.Weemes@xylem.com>
Sent: Wednesday, January 31, 2024 3:43 PM
To: Kate.White <Kate.White@kiewit.com>
Cc: Michael.Odrowski <Michael.Odrowski@kiewit.com>; Andrew.Lattof <Andrew.Lattof@kiewit.com>; Charles.Wampler <Charles.Wampler@kiewit.com>; Stone, Tucker - Xylem <Tucker.Stone@xylem.com>; Pastors, Francis - Xylem <Francis.Pastors@xylem.com>; Ruddy, Heidi - Xylem <Heidi.Ruddy@xylem.com>; Collins, Andrew - Xylem <andrew.collins@xylem.com>
Subject: RE: [External]RE: City of Sherman, TX South WWTP MBR - Submersible Mixers RAS PS - REVISED Quote - RAS Mixers

Hi Kate,

Please see attached revised quotation as requested.

The (2) additional mixers & related accessories are highlighted in red.

MIXERS (SEC. 46 41 25 - SUBMERSIBLE MIXERS: HIGH-SPEED) (RAS)		$10,248
Qty	Description	
2	Flygt Model SR-4630 Submersible Mixer, Stainless steel (ASTM 316L), equipped with a 460 Volt / 3 phase / 60 Hz 2.5 HP 855 RPM motor, Prop 5°, 50 Ft. length of SUBCAB 4G2,5+2x1,5 submersible cable, C/W FLS leakage detector	

MIXERs ACCESSORIES (SEC. 46 41 25 - SUBMERSIBLE MIXERS: HIGH-SPEED) (RAS)		$ 7,836
Qty	Description	
2	SOCKET, PLATFORM ASSEMBLY	
2	KIT, SYSTEM IV-2" FLOOR MOUNT+ 20'CABLE, ONE SUPPORT	
20	GUIDE RAILS, 2"x2" 3/16" SS	
2	MINI-CASII/FUS 120/24VAC,24VDC	
2	SOCKET,11-PIN BACK MOUNTING	

P.S. Dakota Gooden(sp) called me last week inquiring about this quote. I do not have his email address… please keep him in the loop as needed. Thanks!

Thanks,

Bryan Weemes
Engineered & Aftermarket Sales
214-952-9301 | Mobile
bryan.weemes@xylem.com

FLYGT
a xylem brand

From: Kate.White <Kate.White@kiewit.com>
Sent: Friday, January 26, 2024 8:59 AM
To: Weemes, Bryan - Xylem <Bryan.Weemes@xylem.com>
Cc: Michael.Odrowski <Michael.Odrowski@kiewit.com>; Andrew.Lattof <Andrew.Lattof@kiewit.com>; Charles.Wampler <Charles.Wampler@kiewit.com>
Subject: RE: [External]RE: City of Sherman, TX South WWTP MBR - Submersible Mixers RAS PS

Thank you, Bryan!

Kate White
Supply Chain Specialist III

CITY OF SHERMAN CMAR
302 Cliff Hestand Sherman TX, 75090
Cell: (480) 521-3312
Kate.white@kiewit.com

From: Weemes, Bryan - Xylem <Bryan.Weemes@xylem.com>
Sent: Friday, January 26, 2024 6:45 AM
To: Kate.White <Kate.White@kiewit.com>
Cc: Michael.Odrowski <Michael.Odrowski@kiewit.com>; Andrew.Lattof <Andrew.Lattof@kiewit.com>
Subject: RE: [External]RE: City of Sherman, TX South WWTP MBR - Submersible Mixers RAS PS

Hi Kate,

I believe we have what's needed.

I will get this out to you first of next week.

Have a great weekend!

Thanks,

Bryan Weemes

Engineered & Aftermarket Sales
214-952-9301 | Mobile
bryan.weemes@xylem.com

From: Kate.White <Kate.White@kiewit.com>
Sent: Thursday, January 25, 2024 5:14 PM
To: Weemes, Bryan - Xylem <Bryan.Weemes@xylem.com>
Cc: Michael.Odrowski <Michael.Odrowski@kiewit.com>; Andrew.Lattof <Andrew.Lattof@kiewit.com>
Subject: RE: [External]RE: City of Sherman, TX South WWTP MBR - Submersible Mixers RAS PS

Hi Bryan,

See attached. Is there anything else you need to provide a price for this change?

Thanks,

Kate White
Supply Chain Specialist III

CITY OF SHERMAN CMAR
302 Cliff Hestand Sherman TX, 75090
Cell: (480) 521-3312
Kate.white@kiewit.com

From: Michael.Odrowski <Michael.Odrowski@kiewit.com>
Sent: Thursday, January 25, 2024 1:38 PM
To: Kate.White <Kate.White@kiewit.com>
Subject: FW: [External]RE: City of Sherman, TX South WWTP MBR - Submersible Mixers RAS PS

MICHAEL ODROWSKI, PE, PMP
Engineering Project Manager

KIEWIT ENGINEERING GROUP INC.
8900 Renner Blvd, Lenexa, KS 66219
Mailstop: K4.4.A.405
913-689-1627 direct
www.kiewit.com

From: Palacios, Patrick - Xylem <Patrick.Palacios@xylem.com>
Sent: Friday, January 5, 2024 10:25 AM
To: Geile, Quentin <qgeile@plummer.com>; Weemes, Bryan - Xylem <Bryan.Weemes@xylem.com>
Cc: Michael.Odrowski <Michael.Odrowski@kiewit.com>; Andrew.Lattof <Andrew.Lattof@kiewit.com>; katie.white@kiewit.com; Bob Russell <brussell@Hartwellenv.com>
Subject: [External]RE: City of Sherman, TX South WWTP MBR - Submersible Mixers RAS PS

Some people who received this message don't often get email from patrick.palacios@xylem.com. Learn why this is important

Constant speed mixer option attached. You will need two (2) duty mixers due to the length of the tank and our concept of creating bulk flow in the tank.

Per our positioning principles for long tanks, we recommend lining up both mixers along one wall as shown below.

We like to put a mixer in the corner, and the next mixer along the same wall at the midpoint. Place them 15 degree off the wall and have the elevation be about 2* propellers from the floor to center.

This has proven to be the best in 'narrow' long tanks via CFD's that we have seen.

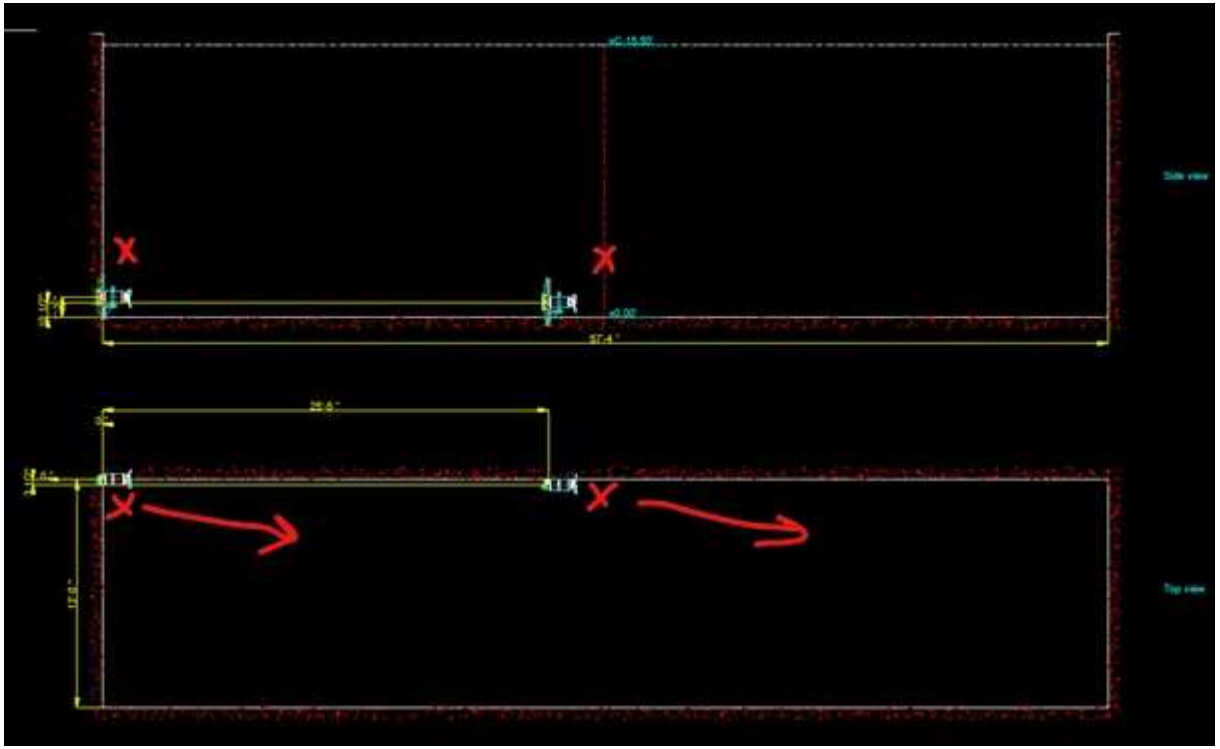

The *exact* location can be tweaked later, depending on how you plan to access the mixers, and where you plan to install the control panel.

The mixers will be mounted on a 2” x 2” mast for retrieval. I would recommend a davit crane located at the top to lower/raise the mixer. Or at least a permanent pedestal anchored to the concrete on top to where you can use a portable davit crane so you don’t have to purchase 2 permanent cranes. Your call.

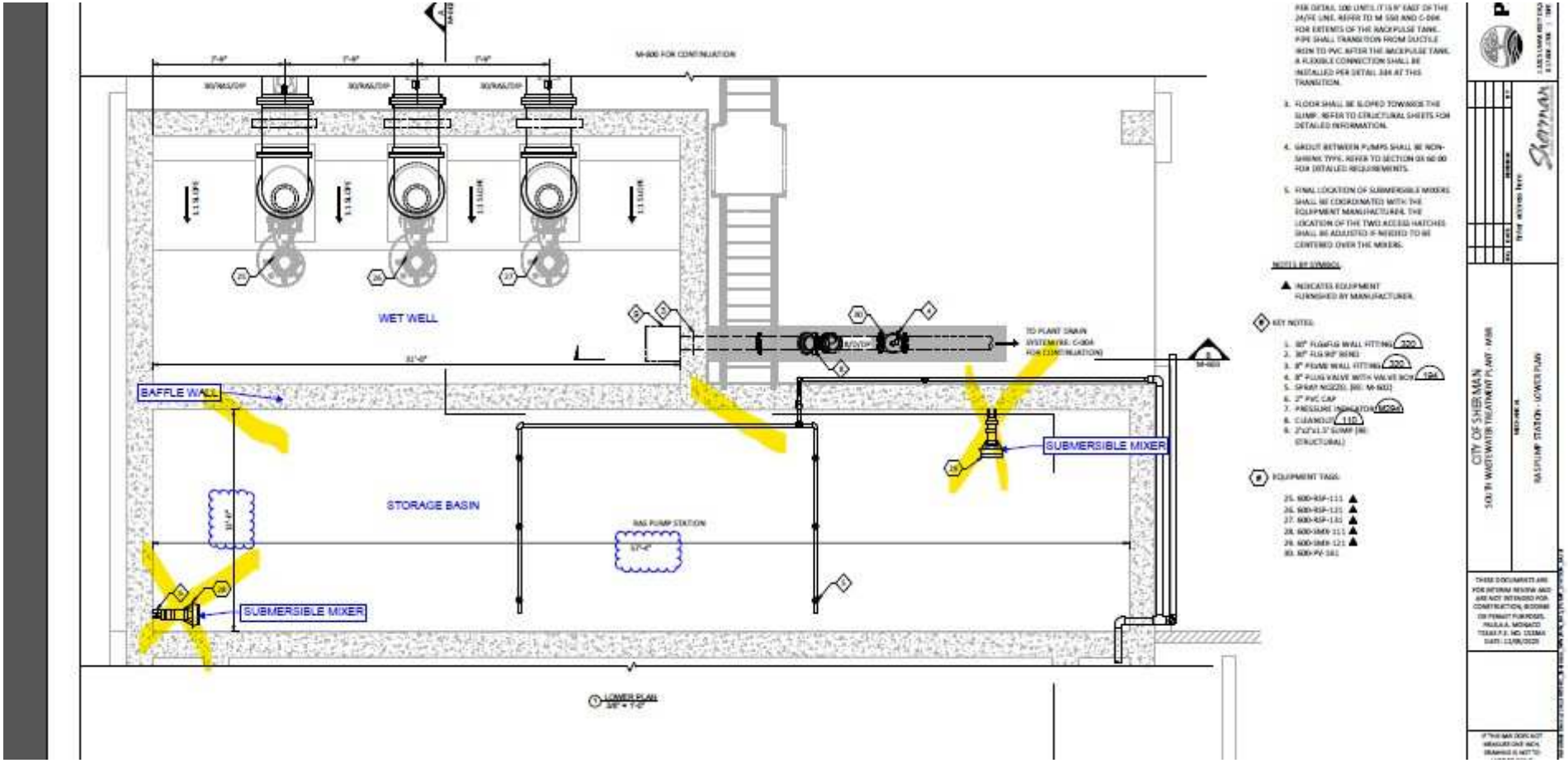

Bryan can provide pricing.

PATRICK X. PALACIOS, P.E.
Applications Engineer
972-512-3611 (direct)
469-712-1011 (cell)
2310 McDaniel Drive
Carrollton, TX 75006
patrick.palacios@xylem.com
LEAVE FEEDBACK

How are we doing?

From: Geile, Quentin <ggeile@plummer.com>
Sent: Thursday, January 4, 2024 4:46 PM
To: Palacios, Patrick - Xylem <Patrick.Palacios@xylem.com>; Weemes, Bryan - Xylem <Bryan.Weemes@xylem.com>
Cc: Michael.Odrowski <Michael.Odrowski@kiewit.com>; andrew.lattof@kiewit.com; katie.white@kiewit.com
Subject: RE: City of Sherman, TX South WWTP MBR - Submersible Mixers RAS PS

Patrick,

The “Screen <= 1/4 inch” option fits our process. Your statement is correct about how the screening works.

Thanks,

Quentin Geile, P.E.*
Project Engineer
Plummer

P: 214.631.6100
D: 972.996.5720
C: 720.633.5705
www.plummer.com

***PE Licenses: TX, CO**

From: Palacios, Patrick - Xylem <Patrick.Palacios@xylem.com>
Sent: Thursday, January 4, 2024 4:33 PM
To: Geile, Quentin <ggeile@plummer.com>; Weemes, Bryan - Xylem <Bryan.Weemes@xylem.com>
Cc: Michael.Odrowski <Michael.Odrowski@kiewit.com>; John.Lavelle <John.Lavelle@Kiewit.com>
Subject: RE: City of Sherman, TX South WWTP MBR - Submersible Mixers RAS PS

CAUTION: This email originated from outside of Plummer. DO NOT CLICK links or attachments unless you recognize the sender and know the content is safe.

So the flow *entering* the RAS storage basin will have gone through 1/4" (6mm) coarse screens and 1mm fine screens? All *upstream* of entering the RAS storage basin?

I don’t see this secondary treatment unit on the plans.

Which option below best represents what you have upstream of the RAS storage basin, if applicable?

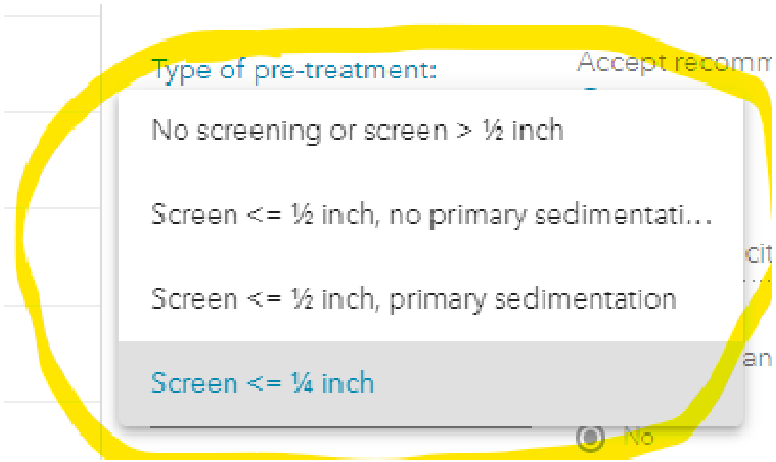

xylem
Let’s Solve Water
How are we doing?

PATRICK X. PALACIOS, P.E.
Applications Engineer
972-512-3611 (direct)
469-712-1011 (cell)
2310 McDaniel Drive
Carrollton, TX 75006
patrick.palacios@xylem.com
LEAVE FEEDBACK

From: Geile, Quentin <ggeile@plummer.com>
Sent: Thursday, January 4, 2024 4:12 PM
To: Palacios, Patrick - Xylem <Patrick.Palacios@xylem.com>; Weemes, Bryan - Xylem <Bryan.Weemes@xylem.com>
Cc: Michael.Odrowski <Michael.Odrowski@kiewit.com>; John.Lavelle <John.Lavelle@Kiewit.com>
Subject: RE: City of Sherman, TX South WWTP MBR - Submersible Mixers RAS PS

Patrick,

Here are answers to your questions:

1. There will be 1/4" (6mm) coarse screens and 1mm fine screens before the secondary treatment unit.
    a. The secondary treatment unit, MBR basins, and RAS pump station are currently covered.
    b. The RAS will NOT be rescreened.
2. We would like constant speed mixers.
3. Flow path is still the same as the sketch below.
4. No jet ring for this please.

Let me know if you need anything else.

Thanks,

Quentin Geile, P.E.*
Project Engineer
Plummer

P: 214.631.6100
D: 972.996.5720
C: 720.633.5705
www.plummer.com

***PE Licenses: TX, CO**

From: Palacios, Patrick - Xylem <Patrick.Palacios@xylem.com>
Sent: Thursday, January 4, 2024 4:07 PM
To: Geile, Quentin <qgeile@plummer.com>; Weemes, Bryan - Xylem <Bryan.Weemes@xylem.com>
Cc: Michael.Odrowski <Michael.Odrowski@kiewit.com>
Subject: RE: City of Sherman, TX South WWTP MBR - Submersible Mixers RAS PS

CAUTION: This email originated from outside of Plummer. DO NOT CLICK links or attachments unless you recognize the sender and know the content is safe.

Also going with no jet ring as it was not checked off (assuming there will be solids in this waste stream which could get caught on the jet ring).

xylem
Let's Solve Water
How are we doing?

PATRICK X. PALACIOS, P.E.
Applications Engineer
972-512-3611 (direct)
469-712-1011 (cell)
2310 McDaniel Drive
Carrollton, TX 75006
patrick.palacios@xylem.com
LEAVE FEEDBACK

From: Palacios, Patrick - Xylem
Sent: Thursday, January 4, 2024 4:03 PM
To: Geile, Quentin <qgeile@plummer.com>; Weemes, Bryan - Xylem <Bryan.Weemes@xylem.com>
Cc: Michael.Odrowski <Michael.Odrowski@kiewit.com>
Subject: RE: City of Sherman, TX South WWTP MBR - Submersible Mixers RAS PS

Need to know if there is any screening up front (per the questionnaire). That could affect mixer sixing.

Assuming you want compact constant speed mixers? Or adaptive mixers (VFD component in motor to change speed)?

Also – is the incoming flow direction across the tank the same as the sketch provided back then?

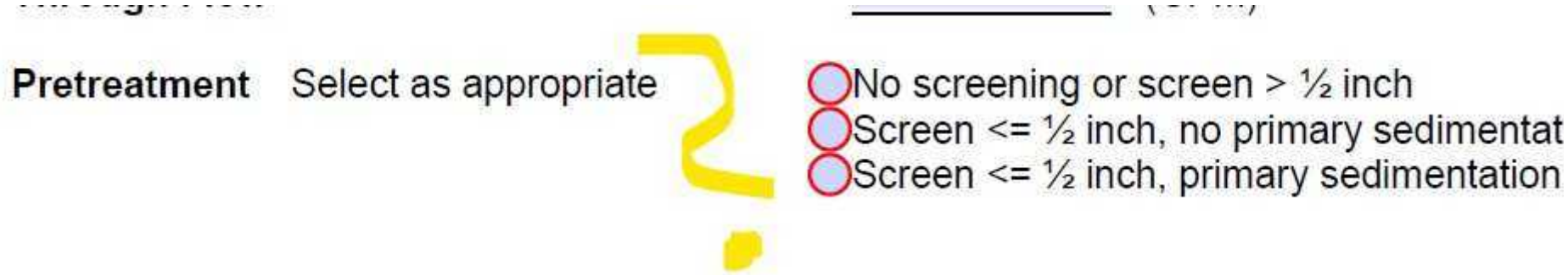

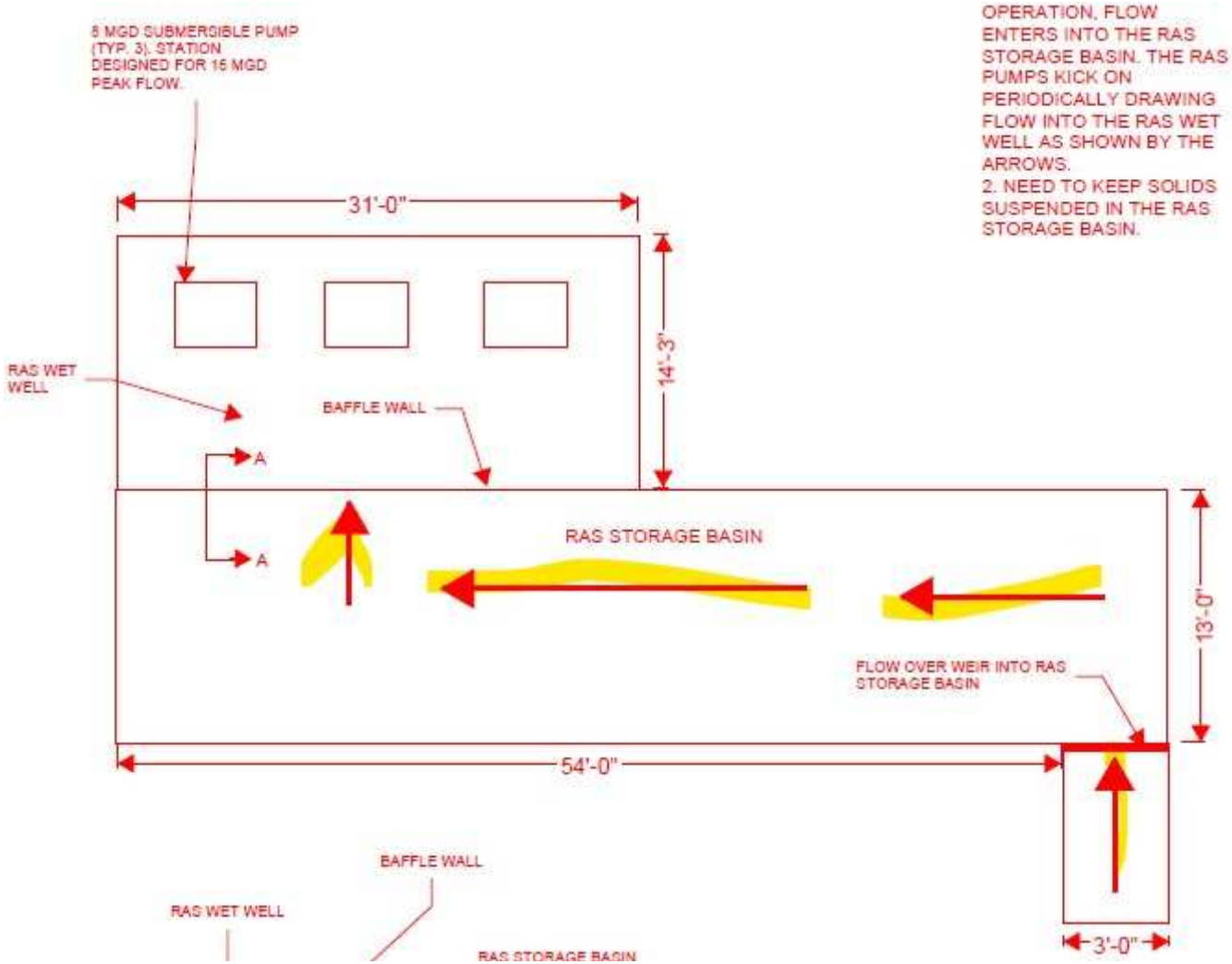

xylem
Let's Solve Water

How are we doing?

PATRICK X. PALACIOS, P.E.
Applications Engineer
972-512-3611 (direct)
469-712-1011 (cell)
2310 McDaniel Drive
Carrollton, TX 75006
patrick.palacios@xylem.com

LEAVE FEEDBACK

From: Geile, Quentin <ggeile@plummer.com>
Sent: Thursday, January 4, 2024 7:48 AM
To: Palacios, Patrick - Xylem <Patrick.Palacios@xylem.com>; Weemes, Bryan - Xylem <Bryan.Weemes@xylem.com>
Cc: Michael.Odrowski <Michael.Odrowski@kiewit.com>
Subject: City of Sherman, TX South WWTP MBR - Submersible Mixers RAS PS

Bryan and Patrick,

I am reaching out regarding the Sherman South WWTP MBR project, where Xylem submitted a bid on Equipment Package 4 for the submersible mixers (Bid Item #13). These mixers were for the Biological Reactor Basins (BRBs).

I wanted to see the potential in adding mixers for the RAS Pump Station to Xylem's scope. For this project, we will have a larger storage basin south of the wet well where the pumps are. The storage basin and wet well are hydraulically connected and separated by a baffle wall that extends down to 2ft above the finished floor. We would like to add mixers meeting the same requirements you all submitted for the BRBs in the storage basin to keep the solids suspended. I did reach out about this originally on 11/2/2023 with a filled out questionnaire (I've attached the questionnaire and email for reference). The attached questionnaire is updated with the latest design information.

I've attached the relevant drawings showing the RAS Pump Station and thoughts on where the mixers should be located. Please note on the east side, we will have bridge crane supports on top of the basin, so we cannot put a mixer along the east wall as the plant staff wouldn't be able to access it. This is why the east mixer is shown away from the wall, and this is as close as we can get the access hatch to the wall with the bridge crane supports.

Please let me know your thoughts on this and any additional information that is needed as soon as you are able. I would like to get the proposed number of mixers, preferred locations, a cut sheet, and the preferred access hatch size. I've copied Mike Odrowski with Kiewit (the CMAR for this project).

Thank you,
Quentin

PLUMMER

Quentin Geile, P.E.*
Project Engineer

14755 Preston Road, Suite 420
Dallas, Texas 75254
P: 214.631.6100
D: 972.996.5720
C: 720.633.5705

qgeile@plummer.com
www.plummer.com

***PE Licenses: TX, CO**

This message, and any attachments to it, may contain information that is privileged, confidential, and exempt from disclosure under applicable law. If the reader of this message is not the intended recipient, you are notified that any use, dissemination, distribution, copying, or communication of this message is strictly prohibited. If you have received this message in error, please notify the sender immediately by return e-mail and delete the message and any attachments.

Please consider the environment before printing this e-mail.

CONFIDENTIALITY NOTICE: This e-mail, including any attachments and/or linked documents, is intended for the sole use of the intended addressee and may contain information that is privileged, confidential, proprietary, or otherwise protected by law. Any unauthorized review, dissemination, distribution, or copying is prohibited. If you have received this communication in error, please contact the original sender immediately by reply email and destroy all copies of the original message and any attachments. Please note that any views or opinions presented in this e-mail are solely those of the author and do not necessarily represent those of Xylem Inc..

SECTION 00 31 00-PS
BID PROPOSAL FORM

Project Name: South Wastewater Treatment Plant – MBR Project (SWWTP-MBR) Equipment Preselection Package 4

ARTICLE 1 - BID RECIPIENT

1.1 This Bid is submitted to:

City of Sherman
Attn: Tom Pruitt, P.E., Utilities Engineer
City of Sherman City Hall
220 W. Mulberry St.
Sherman, Texas 75090

ARTICLE 2 - BIDDER'S ACKNOWLEDGEMENTS

2.1 The undersigned Bidder proposes and agrees, if this Bid is accepted, to enter into an Agreement with the selected Construction Manager at Risk (CMAR) to perform all Work as specified or indicated in the Bidding Documents for the prices and within the times indicated in this Bid and in accordance with the other terms and conditions of the Bidding Documents.

2.2 Bidder accepts all of the terms and conditions of the Invitation to Bid and Instructions to Bidders, including without limitation those dealing with the disposition of Bid security.

2.3 Bidder accepts provisions of the Preselection Special Conditions as to liquidated damages in the event of failure to complete Work in accordance with the schedule set forth in the Agreement.

ARTICLE 3 - BIDDER'S REPRESENTATIONS

3.1 In submitting this Bid, Bidder represents, as set forth in the Agreement, that:

A. Bidder has examined and carefully studied the Bidding Documents, the other related data identified in the Bidding Documents, and the following Addenda, receipt of which is hereby acknowledged.

Addendum No.	Addendum Date
1	October 26, 2023
2	October 30, 2023

B. Bidder has visited the Site and/or become familiar with and is satisfied as to the general, local and Site conditions that may affect cost, progress, and performance of the Work.

C. Bidder is familiar with and is satisfied as to all federal, state and local laws and regulations that may affect cost, progress and the furnishings of Goods and Special Services.

D. Bidder has obtained and carefully studied (or accepts the consequences for not doing so) all additional or supplementary examinations, investigations, explorations, tests, studies and data concerning conditions (surface, subsurface and Underground Facilities) at or contiguous to the Site which may affect cost, progress, or performance of the Work or which relate to any aspect of the means, methods, techniques, sequences, and procedures of construction to be employed by Bidder, including applying the specific means, methods, techniques, sequences, and procedures of construction expressly required by the Bidding Documents to be employed by Bidder, and safety precautions and programs incident thereto.

E. Bidder does not consider that any further examinations, investigations, explorations, tests, studies, or data are necessary for the determination of this Bid for performance of the Work at the price(s) bid and within the times and in accordance with the other terms and conditions of the Bidding Documents.

F. Bidder is aware of the general nature of work to be performed by OWNER and others at the Site that relates to the Work as indicated in the Bidding Documents.

G. Bidder has correlated the information known to Bidder, information and observations obtained from visits to the Site, reports and drawings identified in the Bidding Documents, and all additional examinations, investigations, explorations, tests, studies, and data with the Bidding Documents.

H. Bidder has given ENGINEER written notice of all conflicts, errors, ambiguities, or discrepancies that Bidder has discovered in the Bidding Documents, and the written resolution thereof by ENGINEER is acceptable to Bidder.

I. The Bidding Documents are generally sufficient to indicate and convey understanding of all terms and conditions for the performance of the Work for which this Bid is submitted.

ARTICLE 4 - FURTHER REPRESENTATIONS

4.1 Bidder further represents that:

A. This Bid is genuine and not made in the interest of or on behalf of any undisclosed individual or entity and is not submitted in conformity with any agreement or rules of any group, association, organization or corporation;

B. Bidder has not directly or indirectly induced or solicited any other Bidder to submit a false or sham Bid;

C. Bidder has not solicited or induced any individual or entity to refrain from bidding; and

D. Bidder has not sought by collusion to obtain for itself any advantage over any other Bidder or over Owner.

ARTICLE 5 - BASIS OF BID

5.1 Bidder will complete the Work in accordance with the Contract Documents for the prices shown in the attached Bid Schedule.

5.2 Bidder agrees that that this Bid Proposal and Price shall be valid for purchase orders placed by December 2023. If a purchase order is not placed for the system by this date, the Bidder agrees that the Price may be scaled based on the Engineering News Record 20-city Average Construction Cost Index (20-City ENR CCI). The base 20-City ENR CCI shall be the October 2023 Index value. The Revised Price shall be calculated as follows:

$$\text{Revised Price} = \text{Price} \times \frac{\text{(20-City ENR CCI for Month of Purchase Order Issuance)}}{\text{(October 2023 Index value)}}$$

ARTICLE 6 - TIME OF COMPLETION

6.1 Bidder agrees that the Equipment and Services to be furnished will be provided complete on or before the dates or within the number of calendar days indicated in the Preselection Special Conditions.

ARTICLE 7 - DEFINED TERMS

7.1 The terms used in this Bid have the meanings indicated in the General Conditions and the Preselection Special Conditions. The significance of terms with initial capital letters is described in the General Conditions.

BID FORM

(EACH BID PACKAGE TO BE SUBMITTED IN A SEPARATE, SEALED ENVELOPE)

DATE: 11/07/2023

PROJECT NAME: South Wastewater Treatment Plant – MBR (SWWTP-MBR) Preselection Equipment Package 4

This Bid submitted by: Bryan Weemes

Company Name: Xylem Water Solutions USA, Inc. (Seal)
(typed or printed)

State of Incorporation: Delaware Date of Qualification to do business in TX: 2011

By: Richard Pangrazzi
(signature - attach evidence of authority to sign)

Name: Richard Pangrazzi
(typed or printed)

Title: Vice President

(CORPORATE SEAL)

Attest: Regional Sales Manager
(signature of Corporate Secretary)

Federal Tax ID or Social Security No. 45-2080074

Contact for receipt of official communications:

Name: Bryan Weemes

Business Address: 2310 McDaniel Dr, Carrollton, TX 75006

Phone: 214-952-9301 Facsimile:

E-mail: bryan.weemes@xylem.com

Bid Submitted on: 11/07/2023

State Contractor License No.: Not Applicable (If applicable)

Section 41 12 00: Screw Conveyor

BID PACKAGE	DESCRIPTION	UNIT	QUANTITY	PROPOSAL AMOUNT
1	For all Work defined in the Bidding Documents to supply complete Screw Conveyor (Section 41 12 00).	LUMP SUM	1	$ No Bid

Contractor's expected delivery date: April 2024

BW Bidder's Initials

Section 43 11 38: High Efficiency Blower Systems

BID PACKAGE	DESCRIPTION	UNIT	QUANTITY	PROPOSAL AMOUNT
2	For all Work defined in the Bidding Documents to supply complete High Efficiency Blower Systems (Section 43 11 38).	LUMP SUM	1	$_____

1

Contractor's expected delivery date: May 2024

_____ Bidder's Initials

Section 43 12 19.01: Aeration Blowers, Rotary Screw Positive Displacement

and

Section 43 12 19.02: Sludge Storage Blowers, Rotary Screw Positive Displacement

BID PACKAGE	DESCRIPTION	UNIT	QUANTITY	PROPOSAL AMOUNT
3	For all Work defined in the Bidding Documents to supply complete Aeration Blowers, Rotary Screw Positive Displacement (Section 43 12 19.01).	LUMP SUM	1	$ No Bid
4	For all Work defined in the Bidding Documents to supply complete Sludge Storage Blowers, Rotary Screw Positive Displacement (Section 43 12 19.02).	LUMP SUM	1	$ No Bid

Contractor's expected delivery date: August 2024

BW Bidder's Initials

Section 43 21 21.75: Recessed Impeller Pumps

BID PACKAGE	DESCRIPTION	UNIT	QUANTITY	PROPOSAL AMOUNT
5	For all Work defined in the Bidding Documents to supply complete Recessed Impeller Pumps (Section 43 21 21.75).	LUMP SUM	1	$ No Bid

Contractor's expected delivery date: March 2024

BW Bidder's Initials

Section 43 25 13.30: ~~Horizontal Axial Flow Centrifugal Pumps~~ Submersible Large Capacity Centrifugal Pumps

1

BID PACKAGE	DESCRIPTION	UNIT	QUANTITY	PROPOSAL AMOUNT
6	For all Work defined in the Bidding Documents to supply complete ~~Horizontal Axial Flow Centrifugal~~ Submersible Large Capacity Centrifugal Pumps (Section 43 25 13.30).	LUMP SUM	1	$ 639,981.75

Contractor's expected delivery date: August 2024

BW Bidder's Initials

Section 43 23 15-PS: Pumps, Heavy Duty Rotary Lobe

BID PACKAGE	DESCRIPTION	UNIT	QUANTITY	PROPOSAL AMOUNT
7	For all Work defined in the Bidding Documents to supply complete **Pumps, Heavy Duty Rotary Lobe** (Section **43 23 15-PS**).	LUMP SUM	1	$ No Bid

Contractor's expected delivery date: June 2024

BW Bidder's Initials

Section 43 41 45: Fiberglass Reinforced Plastic Tanks

BID PACKAGE	DESCRIPTION	UNIT	QUANTITY	PROPOSAL AMOUNT
8	For all Work defined in the Bidding Documents to supply complete Fiberglass Reinforced Plastic Tanks **(Section 43 41 45).**	LUMP SUM	1	$ No Bid

Contractor's expected delivery date: July 2024

BW Bidder's Initials

Section 43 41 65: Wire-Wound Prestressed Concrete Tanks

BID PACKAGE	DESCRIPTION	UNIT	QUANTITY	PROPOSAL AMOUNT
9	For all Work defined in the Bidding Documents to supply complete Wire-Wound Prestressed Concrete Tanks (Section 43 41 65).	LUMP SUM	1	$ No Bid

Contractor's expected delivery date: April 2024

BW Bidder's Initials

Section 46 21 53: Cylindrical Perforated Plate Screens

BID PACKAGE	DESCRIPTION	UNIT	QUANTITY	PROPOSAL AMOUNT
10	For all Work defined in the Bidding Documents to supply complete Cylindrical Perforated Plate Screens (Section 46 21 53).	LUMP SUM	1	$ No Bid

Contractor's expected delivery date: April 2024

BW Bidder's Initials

Section 46 23 23: Vortex Grit Removal System and Classifier

BID PACKAGE	DESCRIPTION	UNIT	QUANTITY	PROPOSAL AMOUNT
11	For all Work defined in the Bidding Documents to supply complete Vortex Grit Removal System and Classifier (Section 46 23 23).	LUMP SUM	1	$ No Bid

Contractor's expected delivery date: March 2024

BW Bidder's Initials

Section 46 33 44: Peristaltic Metering Pumps

BID PACKAGE	DESCRIPTION	UNIT	QUANTITY	PROPOSAL AMOUNT
12	For all Work defined in the Bidding Documents to supply complete Peristaltic Metering Pumps (Section 46 33 44).	LUMP SUM	1	$ No Bid

Contractor's expected delivery date: May 2024

BW Bidder's Initials

Section 46 41 25: Submersible Mixers, High Speed

BID PACKAGE	DESCRIPTION	UNIT	QUANTITY	PROPOSAL AMOUNT
13	For all Work defined in the Bidding Documents to supply complete Submersible Mixers, High Speed (Section 46 41 25).	LUMP SUM	1	$ 255,599.7

Contractor's expected delivery date: June 2024

BW Bidder's Initials

Section 46 51 33: Flexible Membrane Disc Diffusers

1

BID PACKAGE	DESCRIPTION	UNIT	QUANTITY	PROPOSAL AMOUNT
14	For all Work defined in the Bidding Documents to supply complete Flexible Membrane Disc Diffusers (Section 46 51 33).	LUMP SUM	1	$ No Bid

Contractor's expected delivery date: June 2024

BW Bidder's Initials

Section 46 51 47: Fine Bubble Diffused Aeration System – Disk

BID PACKAGE	DESCRIPTION	UNIT	QUANTITY	PROPOSAL AMOUNT
~~14~~ 15	For all Work defined in the Bidding Documents to supply complete Fine Bubble Diffused Aeration System – Disk (Section 46 51 47).	LUMP SUM	1	$ No Bid

Contractor's expected delivery date: April 2024

BW Bidder's Initials

Section 46 51 99: Equalization Tank Large Bubble Mixing System

1

BID PACKAGE	DESCRIPTION	UNIT	QUANTITY	PROPOSAL AMOUNT
16	For all Work defined in the Bidding Documents to supply complete Equalization Tank Large Bubble Mixing System (Section 46 51 99).	LUMP SUM	1	$ No Bid

Contractor's expected delivery date: April 2024

BW Bidder's Initials

END OF SECTION

XYLEM WATER SOLUTIONS U.S.A., INC.

*****

UNANIMOUS CONSENT OF THE BOARD OF DIRECTORS

WHEREAS, the undersigned, constituting all of the members of the Board of Directors of Xylem Water Solutions U.S.A., Inc., a Delaware corporation formed pursuant to the laws of the State of Delaware (the "Corporation"), do hereby consent, pursuant to Section 141(f) of the General Corporation Law of the State of Delaware, to the adoption of the resolutions set forth below, with the same effect as if said actions were taken by unanimous approving vote at a meeting at which all of the directors were present in person:

RESOLVED: That the lawful actions taken by the current and former officers of the Corporation, in the name of and on behalf of the Corporation are hereby adopted, ratified, and approved.

RESOLVED FURTHER: That the following named persons are appointed as officers of the Corporation in the capacities indicated opposite their respective names, to serve as officers from this date forward until their resignation, removal, termination of employment with the Corporation or its affiliates, or death or until their successors are duly appointed.

Individuals	Office (s)
Michael J. McGann	President
Peter Bilelis	Vice President & Secretary
Justin Pifer	Vice President & Assistant Secretary
Matthew Fisher	Vice President & Treasurer
Chris Carapella	Vice President & Treasurer
David Alban	Vice President
Ken Albaugh	Vice President
Nitin Bhate	Vice President
Juan De la Maza	Vice President
Todd Huffman	Vice President
Matthew Latimo	Vice President
Chad Lawrence	Vice President
Joseph McCausland	Vice President
Adam McNeill	Vice President
Stewart Nix	Vice President
Richard Pangrazzi	Vice President
Sean Petraitis	Vice President
Randy Stewart	Vice President
Christine Valencia	Vice President

RESOLVED: That any previous appointments of officers for the Corporation are hereby revoked.

RESOLVED FURTHER: That this Unanimous Written Consent may be executed in any number of counterparts, each of which when so executed shall be deemed to be an original and all of which when taken together shall constitute one and the same document, and that the different directors of the Corporation need **not be signatories to the same counterpart.**

This Unanimous Written Consent of the Board of Directors is effective on October 1, 2023.

Peter Bilelis

Peter Bilelis

Matthew Fisher

Matthew Fisher

Michael J. McGann

CITY OF SHERMAN SOUTH WASTEWATER TREATMENT PLANT – MBR EQUIPMENT PACKAGE 4

11-7-23

EXCEPTIONS TO SPECIFICATIONS:

Section 43 25 13.30

BEARINGS

Xylem - Flygt takes exception - Flygt Pumps Bearing Min. Life 50,000

Section 26 -29 23 P-S

VARIABLE FREQUENCY DRIVES (VFDs)

Xylem - Flygt takes exception – VFD's extended and volatile lead-times; estimated @ 300-350 days

xylem

Xylem Water Solutions USA, Inc.

Flygt Products

2310 McDaniel Drive
Carrollton, TX 75006
Tel (972) 418-2400
Fax (972) 416-9570

November 7, 2023

ALL PROSPECTIVE BIDDERS

Quote # 2023-DAL-0577
Job Name: Sherman - South WWTP - MBR Equipment Package 4

Xylem Water Solutions USA, Inc. is pleased to provide a quote for the following Flygt equipment.

PUMPS (SECTION 43 25 13.30 - SUBMERSIBLE LARGE CAPACITY CENTRIFUGAL PUMPS)

Qty	Description
8	Flygt Model NP-3153.095 10" volute Submersible pump equipped with a 460 Volt / 3 phase / 60 Hz 15 HP 1150 RPM motor, 625 impeller, 1 x 50 Ft. length of SUBCAB 4G10+S(2x0,5) submersible cable, FLS leakage detector, volute is prepared for Flush Valve (0567), Explosion Proof (FM), Stainless Steel Impeller, Trimmed
8	TEST FAL 2.3 HYDRO 3140-3153+ COMPLETE PUMP FAL 15-900009
8	TEST FAL 2.2 3153 + DEFAULT PLOTTED FAL 15-900006
8	VOLUTE COATING - BELZONA PER SPEC

PUMPS (SECTION 43 25 13.30 - SUBMERSIBLE LARGE CAPACITY CENTRIFUGAL PUMPS) Price USD $ 185,886.40

VARIABLE FREQUENCY DRIVES (VFDS) - (SECTION - 26 29 23 P-S)

Qty	Description
1	MCC-480V 12HP VFDs IEEE519 - INCLUDES 6 VFD PER SPEC Installation Not Included (Exception)

VARIABLE FREQUENCY DRIVES (VFDS) - (SECTION - 26 29 23 P-S) Price USD $ 331,765.00

PUMP SAFETY RELAYS - (SECTION 43 25 13.30 - SUBMERSIBLE LARGE CAPACITY CENTRIFUGAL PUMPS)

Qty	Description
8	MINI-CASII/FUS 120/24VAC,24VDC
8	SOCKET,11-PIN BACK MOUNTING

PUMP SAFETY RELAYS - (SECTION 43 25 13.30 - SUBMERSIBLE LARGE CAPACITY CENTRIFUGAL PUMPS) Price USD $ 3,200.40

WET WELL ACCESSORIES (SECTION 43 25 13.30 - SUBMERSIBLE LARGE CAPACITY CENTRIFUGAL PUMPS)

Qty	Description
8	GRIP, CABLE SS 25-36MM
8	HOOK, SAFETY ASSEMBLY SS
8	HARDWARE, DISC CONN ASSY 304SS
8	KIT, HARDWARE 3/8IN SS (2X)

FLYGT
a xylem brand

Qty	Description
200	CHAIN 5/16" 316SS SWL2750#
8	KIT, CHAIN FITTING 316SS+ FLYGT SWL1250#
8	CONNECTION, DISCH 10X10" CI
320	TS3162 FEET 2"GUIDE RAIL 316SS
8	GUIDE BAR BRACKET< INTERMEDIATE CUSTOM
8	HOLDER, CABLE HEAVY DUTY 316SS
8	BRACKET, GUIDE BAR UPPER 2" 316
4	GRIP EYE UNIT
16	SLEEVE, NBR
32	BOLT, ANCHOR HD 3/4 X 12IN
1	ANCHOR BOLTS STRUCTURAL - ENGINEER DRAWING/STAMP

WET WELL ACCESSORIES (SECTION 43 25 13.30 - SUBMERSIBLE LARGE CAPACITY CENTRIFUGAL PUMPS) Price USD $ 63,571.60

SPARE PARTS - (SECTION 43 25 13.30 - SUBMERSIBLE LARGE CAPACITY CENTRIFUGAL PUMPS)

Qty	Description
8	KIT, REPAIR BASIC 3153
1	IMPELLER, STAINLESS STEEL CODE 625
1	RING, INSERT CI

SPARE PARTS - (SECTION 43 25 13.30 - SUBMERSIBLE LARGE CAPACITY CENTRIFUGAL PUMPS) Price USD $ 17,473.25

MIXERS (SECTION 46 41 25 - SUBMERSIBLE MIXERS: HIGH-SPEED)

Qty	Description
8	Flygt Model SR-4640 Submersible Mixer, Stainless steel (ASTM 316L), equipped with a 460 Volt / 3 phase / 60 Hz 4 HP 855 RPM motor, Prop 11" with Jet ring, 50 Ft. length of SUBCAB 4G2,5+2x1,5 submersible cable, C/W FLS leakage detector
4	Flygt Model SR-4620 Submersible Mixer460 Volt / 3 phase / 60 Hz 2.3 HP 1685 RPM motor, Prop 15° with Jet ring, 50 Ft. length of SUBCAB 4G2,5+2x1,5 submersible cable, C/W FLS leakage detector
4	Flygt Model SR-4640 Submersible Mixer, Stainless steel (ASTM 316L), equipped with a 460 Volt / 3 phase / 60 Hz 4 HP 855 RPM motor, Prop 9" with Jet ring, 50 Ft. length of SUBCAB 4G2,5+2x1,5 submersible cable, C/W FLS leakage detector

MIXERS (SECTION 46 41 25 - SUBMERSIBLE MIXERS: HIGH-SPEED) Price USD $ 102,897.20

MIXERs ACCESSORIES - (SECTION 46 41 25 - SUBMERSIBLE MIXERS: HIGH-SPEED)

Qty	Description
8	HOIST, PORTABLE ASSEMBLY S.S.
16	SOCKET, PLATFORM ASSEMBLY
16	KIT, SYSTEM IV-2" FLOOR MOUNT+ 20'CABLE, ONE SUPPORT
380	GUIDE RAILS, 2"x2" 3/16" SS
16	MINI-CASII/FUS 120/24VAC,24VDC
16	SOCKET,11-PIN BACK MOUNTING

Qty	Description
	MIXERs ACCESSORIES - (SECTION 46 41 25 - SUBMERSIBLE MIXERS: HIGH-SPEED) Price USD $ 111,740.20

SPARE PARTS (SECTION 46 41 25 - SUBMERSIBLE MIXERS: HIGH-SPEED)

Qty	Description
2	KIT, REPAIR BASIC 4610/20.410+ NITRILE
2	**KIT, REPAIR BASIC 4630/40**

SPARE PARTS (SECTION 46 41 25 - SUBMERSIBLE MIXERS: HIGH-SPEED) Price USD $ 2,876.40

START UP/SERVICES/TRAINING - (SECTION 43 25 13.30 - SUBMERSIBLE LARGE CAPACITY CENTRIFUGAL PUMPS) & (SECTION 46 41 25 - SUBMERSIBLE MIXERS: HIGH-SPEED)

Qty	Description
10	**START UP,, FLYGT,, NO TAX 1-TP MODELS: 3000,7000,8000**

START UP/SERVICES/TRAINING - (SECTION 43 25 13.30 - SUBMERSIBLE LARGE CAPACITY CENTRIFUGAL PUMPS) & (SECTION 46 41 25 - SUBMERSIBLE MIXERS: HIGH-SPEED) Price USD $ 15,750.00

Total Price $ 835,160.45

Freight Charge $ 60,421.00

Total Price $ 895,581.45

Terms & Conditions

This order is subject to the Standard Terms and Conditions of Sale – Xylem Americas effective on the date the order is accepted which terms are available at http://www.xyleminc.com/en-us/Pages/terms-conditions-of-sale.aspx **and incorporated herein by reference and made a part of the agreement** between the parties.

Purchase Orders:	**Please make purchase orders out to: Xylem Water Solutions USA, Inc.**
Freight Terms:	**3 DAP - Delivered At Place 08 – Jobsite (per Inco Terms 2020)** See Freight Payment (Delivery Terms) below.
Taxes:	State, local and other applicable taxes are not included in this quotation.
Back Charges:	**Buyer shall not make purchases nor shall Buyer incur any labor that would result in a back charge to Seller without prior written consent of an authorized employee of Seller.**
Shortages:	Xylem will not be responsible for apparent shipment shortages or damages incurred in shipment that are not reported within two weeks from delivery to the jobsite. Damages should be noted on the receiving slip and the truck driver advised of the damages. Please contact our office as soon as possible to report damages or shortages so that replacement items can be shipped and the appropriate claims made.
Exclusions:	This Quote includes only the items listed as specified above.

xylem

Pricing is valid for 30 days and contingent upon final approval of submittals and release for fabrication by (within 90 days of bid date). This quotation is subject to change if any changes to the specifications and/or plans are made which alter the scope of supply.	
Terms of Payment:	**90% N60 after invoice date; 10% NTE 180 after initial invoice date, subject to credit approval. Xylem's payment shall not be dependent upon Purchaser being paid by any third-party unless Owner denies payment due to reasons solely attributable to items related to the equipment being provided by FLYGT.**
Terms of Delivery:	Prepaid. Equipment standard shipment is DIRECT with "partial shipments permissible".
Time of Delivery:	Per Specifications. VFDs: 300 – 350 days (Exception)
Start Up/Training:	**Included**
Plans/Specs:	CITY OF SHERMAN SOUTH WWTP - MBR EQUIPMENT PACKAGE 4
Addendum:	**The following Addendums have been reviewed #1, #2**
Schedule:	Submittals will be supplied Per Spec.
Warranty:	Per Specification
COVID 19:	**Our current delivery lead-times are forecasted estimates only due to the outbreak of the COVID-19 virus pandemic and its global effects on commerce, supply chain, and logistics. Xylem will, however, use all commercially reasonable efforts to minimize any delivery delay impacts.**
Changes:	This Quotation is based on the current design criteria provided to Xylem Water Solutions USA, Inc. Revisions may result in price changes.
Terms/Conditions:	**The Xylem Water Solutions USA, Inc. North American Terms and Conditions of Sale apply to this offer.**

Thank you for the opportunity to provide this quotation. Please contact us if there are any questions.

Sincerely,

Bryan Weemes
Engineered & Aftermarket Sales - Flygt
Cell: 214-952-9301
bryan.weemes@xylem.com

Customer Acceptance

This order is subject to the Standard Terms and Conditions of Sale – Xylem Americas effective on the date the order is accepted which terms are available at http://www.xyleminc.com/en-us/Pages/terms-conditions-of-sale.aspx **and incorporated herein by reference and made a part of the agreement** between the parties.

A signed copy of this Quote is acceptable as a binding contract.

Purchase Orders: Please make purchase orders out to: Xylem Water Solutions USA, Inc.

Quote #:	2023-DAL-0577
Customer Name:	ALL PROSPECTIVE BIDDERS
Job Name:	Sherman - South WWTP - MBR Equipment Package 4
Total Amount: (including freight)	**$ 895,581.45**

Signature: _____ Name: _____ (PLEASE PRINT)

Company/Utility: _____ PO: _____

Address: _____ Date: _____

_____ Phone: _____

_____ Email: _____

_____ Fax: _____

FLYGT
a xylem brand

Xylem Water Solutions USA, Inc.

Flygt Products

2310 McDaniel Drive
Carrollton, TX 75006
Tel (972) 418-2400
Fax (972) 416-9570

February 5, 2024

CMAR - KIEWIT

Quote # 2023-DAL-0577 **Alternate 3, Version 1**

Job Name: Sherman - South WWTP - MBR Equipment
Package 4 – REVISED (Added RAS Mixers/Accessories)

Xylem Water Solutions USA, Inc. is pleased to provide a quote for the following Flygt equipment.

MIXERS (SEC. 46 41 25 - SUBMERSIBLE MIXERS: HIGH-SPEED) -	**$ 102,897**

Qty	Description
8	Flygt Model SR-4640 Submersible Mixer, Stainless steel (ASTM 316L), equipped with a 460 Volt / 3 phase / 60 Hz 4 HP 855 RPM motor, Prop 11° with Jet ring, 50 Ft. length of SUBCAB 4G2,5+2x1,5 submersible cable, C/W FLS leakage detector
4	Flygt Model SR-4620 Submersible Mixer460 Volt / 3 phase / 60 Hz 2.3 HP 1685 RPM motor, Prop 15° with Jet ring, 50 Ft. length of SUBCAB 4G2,5+2x1,5 submersible cable, C/W FLS leakage detector
4	Flygt Model SR-4640 Submersible Mixer, Stainless steel (ASTM 316L), equipped with a 460 Volt / 3 phase / 60 Hz 4 HP 855 RPM motor, Prop 9° with Jet ring, 50 Ft. length of SUBCAB 4G2,5+2x1,5 submersible cable, C/W FLS leakage detector

MIXERs ACCESSORIES (SEC. 46 41 25 - SUBMERSIBLE MIXERS: HIGH-SPEED)	**$ 111,740**

Qty	Description
8	HOIST, PORTABLE ASSEMBLY S.S.
16	SOCKET, PLATFORM ASSEMBLY
16	KIT, SYSTEM IV-2" FLOOR MOUNT+ 20'CABLE, ONE SUPPORT
380	GUIDE RAILS, 2"x2" 3/16" SS
16	MINI-CASII/FUS 120/24VAC,24VDC
16	SOCKET,11-PIN BACK MOUNTING

MIXERS (SEC. 46 41 25 - SUBMERSIBLE MIXERS: HIGH-SPEED) (RAS)	**$10,248**

Qty	Description
2	Flygt Model SR-4630 Submersible Mixer, Stainless steel (ASTM 316L), equipped with a 460 Volt / 3 phase / 60 Hz 2.5 HP 855 RPM motor, Prop 5°, 50 Ft. length of SUBCAB 4G2,5+2x1,5 submersible cable, C/W FLS leakage detector

MIXERs ACCESSORIES (SEC. 46 41 25 - SUBMERSIBLE MIXERS: HIGH-SPEED) (RAS)	**$ 7,836**

Qty	Description
2	SOCKET, PLATFORM ASSEMBLY
2	KIT, SYSTEM IV-2" FLOOR MOUNT+ 20'CABLE, ONE SUPPORT
20	GUIDE RAILS, 2"x2" 3/16" SS
2	MINI-CASII/FUS 120/24VAC,24VDC
2	SOCKET,11-PIN BACK MOUNTING

xylem

SPARE PARTS (SECTION 46 41 25 - SUBMERSIBLE MIXERS: HIGH-SPEED)		$ 2,877
Qty	Description	
2	KIT, REPAIR BASIC 4610/20.410+ NITRILE	
2	KIT, REPAIR BASIC 4630/40	

START UP/SERVICES/TRAINING - (SECTION 46 41 25)		$ 15,750
Qty	Description	
7	START UP	

Total Price $ 251,348.00

Freight Charge $ 24,132.00

(USD)Total Price $ 275,480.00

Terms & Conditions

This order is subject to the Standard Terms and Conditions of Sale – Xylem Americas effective on the date the order is accepted which terms are available at http://www.xyleminc.com/en-us/Pages/terms-conditions-of-sale.aspx and incorporated herein by reference and made a part of the agreement between the parties.

Purchase Orders: Please make purchase orders out to: Xylem Water Solutions USA, Inc.

Freight Terms: 3 DAP - Delivered At Place 08 – Jobsite (per Inco Terms 2020)
See Freight Payment (Delivery Terms) below.

Taxes: State, local and other applicable taxes are not included in this quotation.

Back Charges: Buyer shall not make purchases nor shall Buyer incur any labor that would result in a back charge to Seller without prior written consent of an authorized employee of Seller.

Shortages: Xylem will not be responsible for apparent shipment shortages or damages incurred in shipment that are not reported within two weeks from delivery to the jobsite. Damages should be noted on the receiving slip and the truck driver advised of the damages. Please contact our office as soon as possible to report damages or shortages so that replacement items can be shipped and the appropriate claims made.

Exclusions: This Quote includes only the items listed as specified above.
Pricing is valid for 30 days and contingent upon final approval of submittals and release for fabrication by (within 90 days of bid date). This quotation is subject to change if any changes to the specifications and/or plans are made which alter the scope of supply.

Terms of Payment: 90% N60 after invoice date; 10% NTE 180 after initial invoice date, subject to credit approval. Xylem's payment shall not be dependent upon Purchaser being paid by any third-party unless Owner denies payment due to reasons solely attributable to items related to the equipment being provided by FLYGT.

Terms of Delivery: Prepaid. Equipment standard shipment is DIRECT with "partial shipments permissible".

Time of Delivery: Per Specifications

Start Up: Included – Per Specifications

Plans/Specification: CITY OF SHERMAN SOUTH WWTP - MBR EQUIPMENT PACKAGE 4

Addendum: The following Addendums have been reviewed; #1 & #2

Schedule: Submittals will be supplied per specifications.

FLYGT
a xylem brand

Warranty:	Per specifications
COVID 19:	Our current delivery lead-times are forecasted estimates only due to the outbreak of the COVID-19 virus pandemic and its global effects on commerce, supply chain, and logistics. Xylem will, however, use all commercially reasonable efforts to minimize any delivery delay impacts.
Changes:	This Quotation is based on the current design criteria provided to Xylem Water Solutions USA, Inc. Revisions may result in price changes.
Terms/Conditions:	The Xylem Water Solutions USA, Inc. North American Terms and Conditions of Sale apply to this offer.

Thank you for the opportunity to provide this quotation. Please contact us if there are any questions.

Sincerely,

Bryan Weemes
Engineered & Aftermarket Sales - Flygt
Cell: 214-952-9301
bryan.weemes@xylem.com

Customer Acceptance

This order is subject to the Standard Terms and Conditions of Sale – Xylem Americas effective on the date the order is accepted which terms are available at http://www.xyleminc.com/en-us/Pages/terms-conditions-of-sale.aspx and incorporated herein by reference and made a part of the agreement between the parties.

A signed copy of this Quote is acceptable as a binding contract.

Purchase Orders: Please make purchase orders out to: Xylem Water Solutions USA, Inc.

Quote #:	2023-DAL-0577 **Alternate 3, Version 1**
Customer Name:	ALL PROSPECTIVE BIDDERS
Job Name:	Sherman - South WWTP - MBR Equipment Package 4
Total Amount: (including freight)	$ **275,480.00**

Signature: _____ Name: _____
(PLEASE PRINT)

Company/Utility: _____ PO: _____

Address: _____ Date: _____

_____ Phone: _____

_____ Email: _____

_____ Fax: _____

South WWTP – MBR Project

January 15, 2024

City of Sherman (COS)
220 W. Mulberry Street
Sherman, TX 75090

Attn: Alan Davis

Subject: Xylem Stainless Steel Dropleg and Cooling Loop Piping, Early Procurement Package 4 BP01-004, GMP C, Bid items 14 and 15.

Dear Mr. Davis,

CMAR is providing Written Notice in reference to General Conditions 10.05 B. Notice. CMAR received direction in the weekly Process Design Task Force Meeting to have Xylem provide additional scope of furnishing stainless steel droplegs and cooling loops to the biological aeration basin grids which was going to be covered in BP08-001 Process Mechanical package. This information was passed to the Vendor (46 51 47 Bid Item 15) and their current price of $143,000.00 does not include CMAR fee and contingency.

Xylem is currently working on a price to add additional scope for the same option on the Sludge Storage Tank (46 51 33 Bid Item 14) and are waiting on additional information before the final piping quantity can be determined. Once this information is received, a PCO will be submitted for all scope changes.

An addendum to BP08-001 Process Mechanical Package will be issued by the Engineer reflecting this change in scope as mentioned in the Process Mechanical Meeting held on January 11, see attached 2024 0111 Process Design Task Force Meeting Notes.

Sincerely,

Kiewit Water Facilities South Co.

Kory Kyllo, Project Manager
South WWTP - MBR

CC: GTUA Paul Sigle, Nichole Murphy

COS	Tom Pruitt, Clint Philpott, Wayne Lee
Engineer	Sherri van der Wege, David Gudal
Owner's Rep	Ron Mick, Hugh Brightwell, Toby Flinn
Kiewit	James Goyer, TJ Paul, Kory Kyllo, Colin Bunker, Vince Como, Charles Wampler, John Lavelle

Attachment: Agreement References
Urgent City of Sherman Project - Xylem Sanitaire Flygt Material Contracts - Bid Award
2024 0111 Process Design Task Force Meeting Notes

Agreement References

General Conditions 10.05 B. Notice:

Notice: Written notice stating the general nature of each Claim shall be delivered by the claimant to Engineer and the other party to the Contract promptly (but in no event later than ~~30~~ 07 days) after the start of the event giving rise thereto. The responsibility to substantiate a Claim shall rest with the party making the Claim. Notice of the amount or extent of the Claim, with supporting data shall be delivered to the Engineer and the other party to the Contract within ~~60~~ 30 days after the start of such event (unless Engineer allows additional time for claimant to submit additional or more accurate data in support of such Claim).

Charles.Wampler

From: Charles.Wampler@kiewit.com
Subject: FW: [External]RE: **URGENT** City of Sherman Project - Xylem Sanitaire/Flygt Material Contracts - Bid Award

---

From: Stone, Tucker - Xylem <Tucker.Stone@xylem.com>
Sent: Tuesday, January 9, 2024 3:57 PM
To: Kate.White <kate.white@kiewit.com>
Cc: Button, Susan - Xylem <Susan.Button@xylem.com>; Weemes, Bryan - Xylem <Bryan.Weemes@xylem.com>; Pastors, Francis - Xylem <Francis.Pastors@xylem.com>
Subject: [External]RE: **URGENT** City of Sherman Project - Xylem Sanitaire/Flygt Material Contracts - Bid Award

> You don't often get email from tucker.stone@xylem.com. Learn why this is important

Hello Kate,

The adder price for adding stainless steel droplegs and cooling loops to the aeration grids is **$143,000**. The only changes that we're making to our submitted scope package is that we are now providing the stainless steel cooling loop and dropleg piping while also incorporating the piping layout into the overall layout of each grid.

Carollo has also asked us to provide an adder price for dropleg and cooling loop piping. I told them that I will be sending the adder price through Kiewit. Carollo mentioned that we would need to supply piping up to the water elevation of the aeration basins, or 3' below the walkway elevation. See attached email.

In order to pride an adder price for the same option with the Sludge Storage Tank, we will need more information to determine the length of cooling loop piping required. The parameters need are max wastewater temperature and max blower discharge temperature.

Please let us know if there are any questions.

Thanks,

Tucker Stone
Xylem Application Engineer – Sanitaire Products
247 W Freshwater Way, Suite 200
Milwaukee, WI 53204
O: +1.414.365.2374 M: +1.262.289.7598
Tucker.Stone@xylem.com

From: Pastors, Francis - Xylem <Francis.Pastors@xylem.com>
Sent: Monday, January 8, 2024 2:13 PM
To: kate.white@kiewit.com
Cc: Stone, Tucker - Xylem <Tucker.Stone@xylem.com>; Button, Susan - Xylem <Susan.Button@xylem.com>; Weemes,

Bryan - Xylem <Bryan.Weemes@xylem.com>
Subject: **URGENT** City of Sherman Project - Xylem Sanitaire/Flygt Material Contracts - Bid Award

Kate,

Happy New Year!

Thanks for the "DRAFT" contract, including both the Flygt & Sanitaire Products proposed on the Sherman, TX Project.

Bryan had mentioned that you are waiting on two items:

1. Mark-ups and comments to the "DRAFT" Contract: Attached is a copy of our proposal, which includes the proposed make-ups. Specifically reference pages 23-90 of the pdf. It also includes our general scope letter and clarifications.

2. Adder for SS drops/cooling piping in the Sanitire Proposal: We are currently looking at the layout and associated costing. We should have this for you in the next couple days.

Let us know if you have any questions or concerns.

Thanks,

Francis

Francis Pastors, PE
Xylem Territory Manager – Sanitaire Products
247 W. Freshwater Way, Suite 200
Milwaukee, WI 53204
francis.pastors@xylem.com
414-207-5465

CONFIDENTIALITY NOTICE: This e-mail, including any attachments and/or linked documents, is intended for the sole use of the intended addressee and may contain information that is privileged, confidential, proprietary, or otherwise protected by law. Any unauthorized review, dissemination, distribution, or copying is prohibited. If you have received this communication in error, please contact the original sender immediately by reply email and destroy all copies of the original message and any attachments. Please note that any views or opinions presented in this e-mail are solely those of the author and do not necessarily represent those of Xylem Inc..

2024.01.11 Process Design Task Force

Date:	1/11/2024
Time:	2:00 - 3:00 PM CST
Location:	MS Teams
Prepared by:	CMAR Odrowski

Sherman South WWTP

Process Design Task Force Meeting

ATTENDEES

ATTENDED	NAME	Role	Organization
Yes	Michael Odrowski	Engineering Manager	Kiewit
Yes	Nathan Whiddon		City of Sherman
	Megan Martin		Carollo
Yes	BK Zaveri		Mead & Hunt
	Colin Bunker		Kiewit
Yes	Sherri van der Wage		Plummer
Yes	Brenna Wagner		Carollo
Yes	Nathan Zaugg		Carollo
Yes	Freddy Mena		Mead & Hunt
	Darcy Sachs		Carollo
Yes	Paula Monaco		Plummer
Yes	Charlotte Smith		Mead & Hunt
Yes	Ron Mick		Pape-Dawson
Yes	Alan Davis		Plummer
Yes	Tom Pruitt		City of Sherman
	Clint Philpot		City of Sherman
	Paul Sigle		GTUA
	David Gudal		Plummer
	Nichole Murphy		GTUA
	Kory Kyllo		Kiewit
	Toby Flinn		Pape-Dawson
	Joe Castillo		Pape-Dawson
Yes	Quentin Geile		Plummer
Yes	Ruby Diaz		Carollo
Yes	Shannon Saramaa		Mead & Hunt
Yes	Amir Shokouhi		Pape-Dawson
	Hugh Brightwell		Pape-Dawson
Yes	Joe Schuler		Kiewit
	Jim Goyer		Kiewit
Yes	Chester Wilson		City of Sherman
	Chris Swonke		Mead & Hunt
Yes	Andrew Lattof		Kiewit

Yes	Thomas Young		Plummer
	Mark Perkins		Mead & Hunt
Yes	Russ Ferlita		Mead & Hunt
Yes	Charles Wampler		Kiewit
Yes	Tyler Bly		Kiewit
Yes	Jeff Rigdon		City of Sherman

Legend
Previous Meeting Notes
Current Meeting Notes
Action Items

1. **Safety**
   a. Safety Moment

2. **Design**
   a. Deliverables in Review
      1) **65% Drawings**
      2) **M Sheets Review, Walk Thru Highlighting Differences from Previous Bid Pkgs**
         i. **Bioreactor Aeration Basins**
            1) **Effluent Pipe, Ruby Dwg, email 1/11/2024**
            2) **Al M Odrowski will forward to Tyler Bly for review.**
         ii. **Influent Splitter Box**
         iii. **Bioreactor Blower Room**
         iv. **Membrane Blowers**
         v. **Carbon Storage Tanks**, piping connections now shown, addl detail from previous drawing version
         vi. **Diversion Structure**, one less gate and penetration, less cost
         vii. EQ Basin
         viii. **EQ Basin Flow Control Valve**, 10' dia MH instead of vault, less cost
         ix. **EQ Flow Meter**, 10' dia MH instead of vault, less cost
         x. **EQ Basin Mixing System**
         xi. **Effluent Filters**, less-steep stairs are needed for Aqua-Aerobics equipment, similar to stairs in structural drawings, Al Plummer to initiate stair revision.
         xii. **Relift Pump Station**, upcoming bid, new item
            1) Axial flow pumps
         xiii. RAS Discharge Piping
         xiv. **Influent Pump Station**
         xv. **IPS Electrical Structure**
         xvi. **PTU**
         xvii. **Blower Building**
         xviii. **Sludge Storage Tank**

   b. Deliverable Pkgs for Bidding
      1) **Preview Process Mechanical Pkg BP08-001**
         i. **Bid Opening Date 1/24/2024**
            1) **Addendum No. 1 Out**
            2) **Addendum No. 2 Forthcoming**
         ii. *Status, Contents*
            1) *Add peristaltic metering pumps and FRP tanks to bid package*
   c. Upcoming Deliverables
      1) Design Challenges/Support Required
      2) DN Tank Responses
         i. Submitted, under review
      3) Tank Underdrain Design
         i. Chris- Detail being drafted, DN foundation design needed to finalize drain
      4) Tank Under-Slab Piping
         i. Under development, coordinate w/ DN and buried yard piping
      5) Update on Tank Coating Spec
         i. Vinyl Ester
            1) Open, under consideration for inclusion in coating spec
      6) Schedule
         i.

3. **Procurement,**

a. Active Packages
    1) Scope Changes
        i. DN Tank
            1) PHi Air System, specification issued, adder
            2) Fourth nozzle needed, wash down, adder
            3) Handrail EQ, tie-off could be added, considering washdown operations before moving forward w/ deletion
            4) Upsized overflow inlet weir
        ii. Aerzen Blowers
            1) Vendor provided vibration switch, stops on high vibration, consistent w/ P&IDs
            2) 50-MPH enclosure
        iii. RAS Pumps Discharge Elbow, GPS, Al Quentin will provide followup, 12-in to 20-in
        iv. Submersible Mixers, RAS PS, Xylem, Al Quentin will provide followup
        v. Rotary Lobe Pumps, Vogelsang
            1) 316 SS baseplates Shannon followup
            2) Duty Points, 75 gpm ==> 200 gpm, 45 TDH
        vi. Aeration System, Fine Bubble Disc Diffusers, 46 51 47 Biological Aeration Basin, Xylem/Sanitaire
            1) Dropleg and cooling loop piping, Al Ruby followup to show dropleg connection for piping to be furnished by Xylem/Sanitaire on Proc Mech PKG BP08-001, for contractor coordination and scope clarity. Drawing revision to be included in Add 2 or Add 3.
            2) Stainless piping will be 143K adder to Xylem.
        vii. Aeration System, Flexible Membrane Disk Diffusers, 46 51 33, Sludge Storage Tank, Xylem/Sanitaire
            1) Max wastewater temp and max blower discharge temp needed before length of cooling loop piping can be determined, Al Ruby Followup w/ Xylem

b. Packages In Development
    1) None

4. **Work Planning and Construction Schedule**
    a. Work Plans
    b. Pre-Activity Meetings
    c. Schedule Highlights

5. **Submittals**
    a.

6. **RFIs**
    a.

7. **Quality**
    a. Source Inspection
    b. Material Receiving
    c. Non-Conformance
    d. Issues/Concerns

8. **As-Built and Redlines**
    a. Intent of Meeting

9. **Field Order/WCD/Design Modifications**
    a. Intent of Meeting

10. **Value Engineering**
    a.

11. **Attachments:**
    a.

Action Items

ID	Description	Assigned To	Due	Complete

Decision Points

ID	Description	Location	Date

PLUMMER

Potential Change Order (PCO) Request

PROJECT NO: 1422-005-02

PROJECT: South Wastewater Treatment Plant - MBR
OWNER: City of Sherman
CONTRACTOR: Kiewit Construction South
ENGINEER: Plummer Associates, Inc.
PCO NO.: 05

DESCRIPTION:

NOTIFICATION BY CONTRACTOR

The Contractor proposes to make the additions, modifications, or deletions to the Work described in the Contract Documents, as shown in Attachment "A" and requests that you take the following action:

- ☐ Notify us that you concur that this change does not require a change in Contract time or amount and issue a Field Order.
- ☒ Issue a Change Order for performing the described change. Change in Contract amount is indicated in the attached detailed cost breakdown of labor, materials, equipment and all other costs associated with this change. Impacts on Contract Time are shown in the attached revised schedule.
- ☐ Authorize the Contractor to proceed with the described change. Payment will be requested at the unit price bid.
- ☐ Authorize the Contractor to proceed with the change under the time and materials provisions of the Contract.

By: Kory Kyllo Date: 2/22/2024

ENGINEER'S RESPONSE

We respond to your request as follows:

- ☐ We concur that this is a no cost or time change. See attached/forthcoming Field Order No. / comments.
- ☒ Your proposal is recommended to the Owner. See attached/forthcoming proposed Change Order.
- ☐ Proceed with the change at the unit price bid.
- ☐ Proceed with the change under the time and materials provisions of the Contract.
- ☐ Additional information is required to evaluate this request. Provide information as described in the attached comments and resubmit.
- ☐ Potential Change Order Request is not accepted.

Construction Manager: Brian Beach, PE CCM Date: 4/3/2024

Engineer: Date: 4.3.2024

Program Manager: Date: 4/4/24

Owner: Digitally signed by Tom Pruitt Date: 2024.04.04 10:37:50-05'00' Date: 4/4/2024

POTENTIAL CHANGE ORDER

Kiewit

Date: March 1, 2024	Potential Change Order #: PCO-0005	Revision #: 0
To: City of Sherman (COS) 220 W. Mulberry Street Sherman, TX 75090	Contract #: 1513-U Construction Manager at Risk (CMAR)	Project: South WWTP - MBR

Drawing, Specification, Equipment Number or Other Reference: WCD 002 Change in Pump Duty Point

Description of the Proposed Change Order Work: Vogelsang Changes

CMAR is in receipt of WCD 002. CMAR is providing this PCO along with the Basis of Estimate and attachments in accordance with General Conditions 1.01 A. 51., 10.01 A. and B., and 10.03 A. There is currently no anticipated impact on schedule. The CMAR support services are T&M per Amendment 1 and are not included in this PCO.

This additional scope results in an addition for GMP C.

Construction				**Estimated Effect on Contract Price**
Lump Sum ($)	Contingency 9% ($)	Additional GCs (12.2% When>$155m)	Fee 9.95% ($)	Change Impact ($)
$59,271.00	$5,334.39	$7,881.86	$7,212.48	**$79,699.73**

Detailed components of above categories must accompany this estimate (discipline, craft, commodity of material, etc.)

Estimated Effect on Project Schedule (calendar days)		**Estimated Effect on Contract Terms**
Substantial Completion	N/A	N/A
Final Completion	N/A	N/A

Recommended by: Kiewit Water Facilities South Co.

Project Manager: _____ 2/22/24
Contractor Date

Recommended by: Design Engineer

Name _____ Date _____

Approved by: Program Manager

Name _____ Date _____

Recommended by: Program Construction Manager

Name _____ 3/25/24
Date

Approved by: City of Sherman

Name _____ Date _____

Approval Signatures are on the PCO cover sheet from Plummer

Basis of Estimate: Vogelsang Changes

Summary

1. Design Growth Changes	Total	$59,271.00
	Grand Total	**$59,271.00**

1. Design Growth Changes

Total	$59,271.00

Vogelsang was awarded BP 04-007 at a price of $130,000.00, see attached Section 43 23 15-PS: Pumps, Heavy Duty Rotary Lobe. Vogelsang was requested to make changes based on design growth, see attached email 13020201 - City of Sherman Project Material Contract. Vogelsang revised their bid price of $130,000.00 to $189,271.00 which is a change or $59,271.00, see attached [External]Answers to Conversion today, 13020202, and 13020202_Scope.

Attachments

1. WCD 002
2. Section 43 23 15-PS: Pumps, Heavy Duty Rotary Lobe
3. Email: 13020201 - City of Sherman Project Material Contract
4. Email: [External]Answers to Conversion today
5. Quote: 13020202
6. Quote: 13020202_Scope

KIEWIT WATER FACILITIES SOUTH CO.
2050 Roanoke Rd, Westlake, TX 76262

Project:	South Wastewater Treatment Plant - MBR	**Project Number:**	
Owner:	Greater Texoma Utility Authority/City of Sherman	1513-U	
Contractor:	Kiewit Water Facilities South Co.	105718	
Engineer:	Plummer Associates	1422-005-02	

Work Change Directive No.: 002 **Description:** Change in Pump Duty Point

Specification: 43 23 15 – PS – Pumps, Heavy Duty Rotary Lobe.

Drawing No.: N/A **Detail Description:** Revised Pump Spec. with updated duty point, materials, and testing requirements

Make the following additions, modifications, or deletions to the Work described in the Contract Documents:

Provide Heavy Duty Rotary Lobe Pumps in accordance with the attached specification section originally provided via e-mail on January 4, 2024.

Purpose of Work Change Directive:

Change in pump duty point is required to meet design requirements of the waste activated sludge system.

The Owner directs the Contractor to proceed with Work described in this Work Change Directive. Compensation for this Work will be determined using the methods described below. Costs for the Work Change Directive may not exceed the total authorized compensation shown for this Work Change Directive shown below without authorization of the Owner by other Work Change Directives or by Change Order. Contractor is to submit a Change Proposal when impacts on Contract Price and Contract Times can be determined. A Change Order or Contract Amendment is to be issued to incorporate changes in Contract Price and / or Contract Times.

Basis of Compensation:

☐ Unit Prices ☒ Lump Sum calculated using Cost of Work provisions in General Conditions Paragraph 11.01

☐ Time and Materials using Cost of Work provisions in General Conditions Paragraph 11.01

☐ Allowance based on provisions in General Conditions Paragraph 11.02.

Required Documentation:

☒ Detailed cost breakdown attached showing labor, materials, equipment and all other costs for this change

☐ Schedule attached to show impacts and justification for requested change in Contract Times

Compensation for this Work Change Directive may not exceed: $ 79,699.73

Project:	South Wastewater Treatment Plant - MBR	**Project Number:**	
Owner:	Greater Texoma Utility Authority/City of Sherman	1513-U	
Contractor:	Kiewit Water Facilities South Co.	105718	
Engineer:	Plummer Associates	1422-005-02	

Recommended by: Design Engineer Name: [signature] Date: 2-20-2024	**Recommended by:** Project Construction Manager Name: [signature] Date: 2/20/24
Approved by: Kiewit Water Facilities South Co. Name: [signature] Date: 2/21/2024	**Approved by:** Program Manager Name: Tobin C. Flinn Date: 02/20/2024
Approved by: Greater Texoma Utility Authority Name: [signature] Date: 2/21/24	**Approved by:** City of Sherman Name: [signature] Digitally signed by Tom Pruitt Date: 2024.02.21 07:45:48-06'00' Date: 2/21/2024

SECTION 43 23 15-PS
PUMPS, HEAVY DUTY ROTARY LOBE

Revised 2/19/2024 to reflect updates to 800-PMP 001 & 002 only

PART 1 - GENERAL

1.1 SUMMARY

A. Section Includes:

1. Heavy duty rotary lobe pumps.
2. Integral gearmotor.
3. Support for CONTRACTOR installation, startup, testing, and placing in service.

B. System Description:

1. Preselected Equipment Supplier shall furnish all equipment for rotary lobe pumps, with side inlets and outlets, complete with motors, shaft couplings, coupling guards, speed reducers, motor support, for a complete operating system. PRESELECTED EQUIPMENT SUPPLIER shall provide assistance to the CONTRACTOR during equipment installation, check-out, startup, testing and commissioning of the rotary lobe pumps.
2. Provide 3 waste activated sludge (WAS) pumps to be installed in the Membrane Equipment Support Building to pump WAS from each membrane basin to the sludge storage tank (SST). The WAS pumps are located indoors in a dry pit configuration.
3. Provide 2 WAS pumps to be installed adjacent to the SST. The pumps will convey WAS from the SST to the existing blend tank at the existing wastewater treatment plant dewatering area. In future conditions, the pumps will convey WAS from the SST to a future dewatering screw press located on the southern portion of the site. The pumps will be designed for both current and future conditions. The pumps are located outdoors under a canopy cover.
4. The equipment, sizes, materials, and arrangements described in this specification section are based on recommendations by Preselected Equipment Suppliers and shall be considered minimum limits of acceptability. The Preselected Equipment Supplier shall be responsible for design, arrangement, and performance of all equipment supplied under this section. Arrangements other than those shown on plans shall be subject to ENGINEER's approval.
5. A pressure switch, furnished and installed by the CONTRACTOR, will be added to the discharge piping to provide a signal to shut down the pump in the event high pressure is detected.
6. The general arrangement of the piping and pumps are shown on the plans. Pump design parameters are listed in the Pump Data Sheets at the end of this section.
7. Refer to P&IDs and Drawings regarding the control logic and description for additional pump monitoring and control information as applicable.

1.2 REFERENCES

A. Preselection Drawings and general provisions of the Contract, including Preselection Special Conditions and Division 01 Specification Sections, apply to this Section.

B. References: Following is a list of standards, which might be referenced in this Section:

1. American Bearing Manufacturers Association (ABMA):
    a. 9-Load Ratings and Fatigue Life for Ball Bearings.
    b. 11-Load Ratings and Fatigue Life for Roller Bearings.
2. American Gear Manufacturers Association (AGMA):
    a. AGMA 2001-B88 – Fundamental Rating Factors and Calculation Methods for Involute Spur and Helical Gear Teeth.
    b. AGMA 6001-B89 – Design and Selection of Components for Enclosed Gear Drives.
    c. AGMA 6010-E88 – Spur, Helical, Herringbone and Bevel Enclosed Drives.
3. American Society of Mechanical Engineers (ASME):
    a. B16.1 – Cast Iron Pipe Flanges and Flanged Fittings, Class 25, 125, 250, and 800.B16.5 – Pipe Flanges and Flanged Fittings.
4. ASTM International (ASTM):
    a. AISI 316 Stainless Steel
    b. AISI - 4140 Hardened Carbon Steel
    c. AISI - 4340 Carbon Steel
    d. AISI - 8620 Case Hardened Steel
    e. ASTM - A36 Carbon Steel
    f. ASTM – A48 Gray Iron Castings
    g. ASTM – A108 Steel Bars, Carbon and Alloy, Cold-Finished
    h. ASTM – A276 Stainless Steel Bars and Shapes
    i. ASTM – A278 Gray Iron Castings for Pressure-Containing Parts for Temperatures Up to 650 Degrees F.
    j. ASTM – A 283 - Low and Intermediate Tensile Strength Carbon Steel Plates.
    k. ASTM – A 470 - Vacuum-Treated Carbon and Alloy Steel Forgings for Turbine Rotors and Shafts.
    l. ASTM – A 516 - Pressure Vessel Plates, Carbon Steel, for Moderate and Lower Temperature Service.
    m. ASTM - A536 Ductile Iron
    n. ASTM – A 576 - Steel Bars, Carbon, Hot Wrought, Special Quality.
    o. ASTM – A 681 - Tool Steels Alloy.
    p. ASTM – A 743 - Castings, Iron-Chromium, Iron-Chromium-Nickel, Corrosion Resistant, for General Application.
    q. ASTM – E 10 - Standard Test Method for Brinell Hardness of Metallic Materials.
    r. ANSI - B16.1 Flat Faced Drilled Flange (150 lb.)
5. Refer to specification Section 43 22 10-PS “Common Requirements for Pumps” Part 1.3.

C. Related Sections:
1. Section 01 33 00 “Submittals”
2. Section 05 05 23-PS “Metal Fastenings and Anchor Bolts”

3. Section 09 91 00-PS “Painting and Protective Coatings”
4. Section 40 05 93-PS “Common Motor Requirements for Process Equipment"

1.3 ADMINISTRATIVE REQUIREMENTS (NOT USED)

1.4 SUBMITTALS

A. Product Data: Include construction details, material descriptions, dimensions of individual components and profiles, pump curves for rated capacities, operating characteristics, electrical characteristics, and any optional features and accessories.

B. Shop Drawings: Include plans, elevations, sections, details, and attachments to other work.
1. Detail equipment assemblies and indicate dimensions, weights, loads, required clearances, method of field assembly, components, and location and size of each field connection.
2. Performance data curves showing head, capacity, horsepower demand, and pump efficiency over the entire operating ranges of the pump, from shutoff to maximum capacity.
a. Indicate separately the head, capacity, horsepower demand, overall efficiency, and minimum submergence required at the guarantee point.
3. Motors:
a. Complete submittal per Section 40 05 93-PS “Common Motor Requirements for Process Equipment"
b. Letter of Certification the motor is compatible with a variable frequency drives when specified as adjustable speed operation.
4. Auxiliary Instrumentation and Devices: Datasheets and mounting locations/details for auxiliary instrumentation and devices furnished with equipment. The information shall include associated mounting brackets and hardware.
5. Wiring Diagrams: If applicable, for power, signal, and control wiring diagrams, including terminals and numbers.
6. Documentation demonstrating factory finish is equivalent to finish system specified in this Section.

C. Information Submittals:
1. Factory functional and performance test reports and logs.
2. Manufacturer’s Certification of Compliance.
3. Special shipping, storage and protection, and handling instructions.
4. Manufacturer’s instructions for installation.
5. Manufacturer’s Certificate of Proper Installation.
6. Qualification Data: For manufacturer and manufacturer’s representative.
7. Suggested spare parts list to maintain the equipment in service for a period of two years. Include a list of special tools required for checking, testing, parts replacement, and maintenance with current pricing information.
8. List special tools, materials, and supplies furnished with equipment for use prior to and during startup and for future maintenance.
9. Warranties and service agreements.

D. Operation and Maintenance Data: For each pumping system to include in operation and maintenance manuals. Provide in accordance with Section 01 78 23 “Operation and Maintenance Data.”

1.5 QUALITY ASSURANCE

A. Performance Curves: All pumps shall have a continuously rising curve. In no case shall the required horsepower at any point on the performance curve exceed the rated horsepower or service factor of the motor or engine.

B. Field Representative: The PRESELECTED EQUIPMENT SUPPLIER shall furnish a qualified field representative for the time indicated in Paragraph 3.4.A of this Section. Field representatives shall be factory-employed personnel and have a minimum of two (2) years of experience with the operation of and training on this type of equipment. Sales representatives will only be considered acceptable service technicians if they have three (3) years of experience with the operation of and training on this type of equipment from the PRESELECTED EQUIPMENT SUPPLIER being supplied and have started up 15 units of a similar size and type from the PRESELECTED EQUIPMENT SUPPLIER. The field representative shall submit a resume for approval before startup assistance can be provided. For each training event two separate pre-startup training sessions shall be performed, one in the early morning and one in the late afternoon. Two separate post-startup training sessions shall be performed, one in the early morning and one in the late afternoon. CONTRACTOR shall coordinate the scheduling of such training and startup assistance with OWNER’S personnel. A typed outline shall be handed out at each training session and, at a minimum, will include normal operating parameters, alarms, and maintenance.

C. Qualifications: Equipment shall be the product of a PRESELECTED EQUIPMENT SUPPLIER having at least ten similar system installations experience in the United States of the type proposed, each with a minimum of 5 years of satisfactory service.

D. Manufacturer shall maintain a complete stock of spare parts commonly needed for the equipment specified at a location within the State of Texas, or spare parts shall be made available within 48 hours of notification.

1.6 DELIVERY, STORAGE, AND HANDLING

A. Deliver, handle, and store pumping system components in accordance with equipment supplier’s written instructions and shop drawings.

1.7 SITE CONDITIONS

A. Structural Performance: All equipment, supports, anchors, and fasteners shall be of adequate size and strength to withstand loads with starting, turbulence, debris, thrusts from liquid movement, thermal expansion and contraction and other loads encountered under operating conditions.

B. Operation: Equipment shall be design and capable of either continuous or intermittent operation.

C. System Arrangement:

1. The equipment, sizes, materials, and arrangements described in the individual specification sections are typically based on recommendations by equipment manufacturers and shall be considered minimum limits of acceptability. The

SUPPLIER shall be responsible for design, arrangement, and performance of all equipment supplied under this section.

D. Environmental Conditions:

1. All equipment including controls and drives specified herein shall be specifically designed to be installed for this service and the environment encountered in this installation, unless noted otherwise.
2. The environment will be moist and corrosive, exhibiting hydrogen sulfide and other corrosive gases encountered in municipal wastewater treatment plants.
3. The raw wastewater contains high chlorides, sulfides, and total dissolved solids. Pumped material expected to contain the following average concentrations at all times:
   a. Chlorides: 282 mg/L
   b. Sulfides: 373 mg/L
   c. Total Dissolved Solids: 1,400 mg/L
4. All equipment shall be designed and capable of operation outdoors at ambient temperatures of 10°F to 110°F.
5. Equipment shall be compatible with heat tracing and insulation, which will be furnished and installed by CONTRACTOR. PRESELECTED EQUIPMENT SUPPLIER shall design piping systems with ample clearances and material compatibility to accept required heat tracing and insulation. If additional freeze protection beyond heat tracing and insulation is required, it shall be furnished by the PRESELECTED EQUIPMENT SUPPLIER. PRESELECTED EQUIPMENT SUPPLIER shall coordinate with the CONTRACTOR to provide direction on where heat tracing is required and shall verify that the CONTRACTOR has provided adequate heat tracing and insulation during startup activities.

E. Field Measurements, Existing Facilities Installation: CONTRACTOR shall verify actual dimensions of openings, adjacent facilities and equipment, utilities and related items by field measurements before fabrication as applicable.

1.8 WARRANTY

A. Extended Equipment Warranty: Refer to Section 01 78 36-PS “Warranties” for extended equipment warranty.

B. All equipment furnished under this section shall have a special equipment warranty, in accordance with the Contract Documents, for a period of two (2) years after the date of Substantial Completion. The cost of removal, shipment, repair, and installation by CONTRACTOR shall be included in the warranty and correction of defective work.

C. Equipment supplier shall provide labor on-site to diagnose and correct any problem that is not resolved via telephone communication with plant personnel within 72 hours or that reoccurs during this warranty period.

D. Equipment supplier shall provide a factory field representative within two weeks of problem occurrence, for non-emergency repairs. Cost for the removal, shipment, repair and installation by CONTRACTOR shall be included in warranty, as well as correction of defective work.

PART 2 - PRODUCTS

2.1 ACCEPTABLE PRESELECTED EQUIPMENT SUPPLIERS

A. Subject to compliance with the Contract Documents, the following equipment suppliers are acceptable.

1. Boerger
2. Vogelsang

B. No like, equivalent, “or-equal” item or substitution is permitted.

2.2 PUMPING UNIT CONSTRUCTION

A. General Description:

1. Pumping unit shall be of the industrial, heavy duty, positive displacement, rotary lobe pump specifically designed for abrasive and non-corrosive sludge / slurry applications and the ability to handle rags or other fibrous material without plugging.
2. All equipment shall be designed and built for 24-hour continuous service at any and all points within the specified range of operation, without overheating, without cavitation, and without excessive vibration or strain.
3. Suction and discharge connections: 316 stainless steel.
4. Lubrication fitting shall be brought to outside of equipment, so it is readily accessible from outside without necessity of removing covers, plates, housings, or guards.
5. Mechanical seals, wear plates and rotors shall be replaceable by removing front cover of rotor housing without disassembly of pump unit or pipe system.
6. Pumps shall be designed with an air space (minimum 5.5”) between the pumping head containing and the timing gear box such that a leak in the shaft seal will allow the sludge to run on the floor and not in the timing gearbox.

B. Rotorcase:

1. The rotorcase material shall be 316 stainless steel.
2. The internal rotorcase surfaces and configuration shall provide a smooth transition from circular port connections at the flanges to the full width of the rotor chamber to allow for unimpeded passage of solids.
3. All fluid wetted parts including the mechanical seal shall be replaceable though the quick release front cover without disassembly of coupling, drive unit or the pipe system.
4. The front of the rotorcase shall incorporate an O-ring groove and O-ring that will form a reusable seal against the front cover.
5. Radial Wearplates:
   a. The peripheral surfaces of the rotor case shall be fitted with removable radial wearplates.
   b. The wearplates shall be carbon steel AISI 4140 hardened to Rockwell C 40.
   c. The radial wearplates shall be retained through a series of stainless steel socket-head cap screws located at the exterior corners of the rotorcase. The cap screws will not protrude into the wearing surface of the wearplates.
6. Rear Wearplates:

a. The rear surfaces of the rotorcase body shall be lined with a pair of wearplates.

b. The wearplates shall be carbon steel AISI 8620 Case Hardened to Rockwell C 55-60.

c. The wearplates shall be secured with stainless steel hex screws through the rear of the rotorcase without protruding into the wearing surface of the wearplates.

7. Rotorcase Front Cover

a. The front cover material shall be 316 stainless steel, case hardened to Rockwell C 55-60.

b. The front cover shall have ground finish and be reversible to effectively double the wear life of the cover.

c. The front cover shall be rigidly supported in place with eye nuts or an iron hinge to facilitate opening the cover for inspection and access to all internal components.

C. Rotors:

1. Type 316 stainless steel or higher quality, cast iron with fusion bonded epoxy or coating in Section 09 91 00-PS, Part 3.6.AA. Rotors shall have abrasion resistant Buna-N coated tips.

2. The pump is fitted with a pair of intermeshing rotors of the trilobe design.

3. The rotors shall be involute splined at the hub for a positive location on the shafts and locked into position by a recessed taper locking assembly or key and keyway style locking mechanism.

4. The complete frontal hub including the locking assembly shall be encapsulated with a flush- mounted, O-ring-sealed rotor cap.

D. Gearcase:

1. The gearcase material shall be type 316 stainless steel.

2. The gearcase shall provide support to the two shafts mounted by duplex taper roller bearings and a pair of timing gears.

3. The gearcase shall incorporate a separate oil reservoir for the bearings of each shaft to ensure adequate lubrication at low running speeds.

4. Timing Gears:

a. Timing Gear Material shall be hardened carbon steel AISI 8620 at AGMA Quality.

b. Timing gears shall be precision ground to give accurate mesh clearance between the rotors. They time gears shall facilitate non-contact pumping action and dry running ability.

c. The timing gears shall be securely locked into position, to maintain optimum alignment with the shaft at all times.

d. A timing cover plate shall permit adjustment of the rotor timing gears without draining the gearcase oil. The timing cover plate shall be carbon steel ASTM A36.

5. The gearcase shall incorporate a sealed expansion chamber with oil filler cap.

6. The front gearbox bearings shall be fitted with stainless steel AISI 316, grease-filled, labyrinth bearing isolators. The bearing isolators consist of a static mounted shaft retainer with a double-groove on the outer face. A labyrinth ring will be mounted against the shaft and interlock with the grooves on the retainer. The retainer will be fitted with a grease nipple allowing grease input, and will act as a barrier within the labyrinth. The retainer houses a double lip oil seal to provide additional protection and to contain the gearcase oil.
7. Shafts:
    a. Shaft Material: Carbon Steel AISI 4340 HT or approved equivalent.
    b. The shafts shall be “non-wetted” at all points.
    c. The motor driven shaft (drive shaft) may be either the upper or lower shaft, as determined by the centerline height of the driver.
    d. The bottom drive shaft position shall be used for the proposed inline base design for this application.
8. Bearings:
    a. Each shaft shall be supported by a pre-loaded heavy-duty duplex taper roller bearing of the anti-friction type.
    b. The positioning of the shafts relative to the gearcase shall permit removal of one shaft bearing without disturbing the bearing of the opposing shaft.
    c. Bearing life to be designed B-10 life rating of at least 100,000 hours.

E. Speed Reducer (Integral Gearmotor):
1. A close-coupled inline helical gear speed reducer shall be used.
    a. Input RPM: 1750.
    b. Maximum Output RPM: 300.
    c. Mounting: horizontal foot type.

F. Mechanical Seals
1. Each pump shall be supplied with single mechanical seals. Silicon carbide to tungsten carbide seal faces shall be provided as a minimum. Seals shall be lubricated with external water.
2. Each seal shall be removable as a complete unit.
3. Designs requiring the removal of the rotorcase for seal replacement are not acceptable.
4. Component seals, seals that are proprietary to the pump Preselected Equipment Supplier are not acceptable.
5. The design shall also incorporate accommodations for packing with no design change to the pump.

G. Baseplate:
1. Provide a common baseplate of fabricated steel.
2. Constructed to support the full weight of pump, motor and speed reducer.
3. The baseplate and shall be provided with grout fill and venting holes. Base shall have pre-drilled anchor bolt holes.
4. The baseplate shall have machined pads to accommodate the factory mounts for the

pump, speed reducer, and motor.

H. Coupling:

1. TB Woods S-flex with Hytrel split sleeve or equal torsionally flexible jaw-type coupling to connect from speed reducer shaft to the pump shaft.
2. OSHA Standard guard shall be provided to cover the coupling.

2.3 ACCESSORY EQUIPMENT

A. Equipment Identification Plate: 16-gauge Type 316 stainless steel with 1/4-inch die-stamped equipment tag number securely mounted in a readily visible location.

B. Lifting Lugs: Individual equipment and/or each field disassemble part weighing over 100 pounds shall be provided with lifting lugs

C. Anchor Bolts: Provide template and Type 316 stainless steel anchors in accordance with Section 05 05 23-PS “Metal Fastenings and Anchor Bolts” and as shown on the Drawings. Size as required by pump manufacturer.

D. Initial Supply of Lubricants: Manufacturer shall indicate types, brands, and quantities of initial lubricants, oil, grease, etc. necessary to startup equipment. CONTRACTOR shall provide and install the recommended lubricants and shall comply with all manufacturer recommended procedures.

2.4 FINISHES

A. All equipment items except stainless steel shall receive surface preparation, prime coating and finish coating in the factory in accordance with Section 09 91 00-PS “Painting and Protective Coatings.” Finish coating colors shall be selected by the OWNER from finish color charts to be provided in shop drawing submittals. Furnish one gallon of touch up paint for installation CONTRACTOR to apply. Alternatively, a fusion bonded epoxy with zinc anodes may be used.

B. All stainless steel surfaces shall be cleaned and welds shall be brushed with Type 316 stainless steel brushes. Electro bead blast or chemically treat all external non-welded stainless steel to a uniform finish.

C. Motors and hydraulic units shall have a factory finish.

D. Machined, polished, and non-ferrous surfaces shall be coated with a corrosion prevention compound.

2.5 MOTORS

A. Comply with NEMA designation, temperature rating, service factor, enclosure type, and efficiency requirements for motors specified in Section 40 05 93-PS “Common Motor Requirements for Process Equipment" for motors, 600 volts and lower, and 250 HP and smaller. Requirements of this Section supersede any conflicting requirements of Section 40 05 93-PS.

B. Motor Sizes: Motor size and detail requirements shall be as indicated in the Blower Data Sheet at the End of Section. Motors shall be properly sized so that the driven loads will not require the motor to operate in service factor range above 1.0 along the complete operating range.

C. If a motor horsepower rating larger than specified is offered as a substitute and accepted, provided required changes in conductors, motor controllers, variable frequency drives, overload relays, fuses, switches, and other related items with no change in the Contract price.

2.6 SOURCE QUALITY CONTROL

A. Factory Tests and Adjustments: Test all pumping units to be furnished.

1. Include test data sheets, curve test results, performance test logs, certified by a factory test engineer.

B. Performance Test:

1. Perform on each pump in accordance with Hydraulic Institute Standards.
2. Tests shall be sufficient to determine the curves of head, input horsepower, and efficiency relative to capacity from shutoff to 150% of design flow. A minimum of six points, including shutoff, shall be taken for each test.
3. At least one point shall be obtained as near as possible to each specified condition.
4. Results of the performance test shall be certified by a Registered Professional Engineer and submitted for approval prior to shipment.

2.7 ACCESSORIES

A. Anchor Bolts: Provide template and Type 316 stainless steel anchors and fasteners in accordance with Section 05 05 23-PS “Metal Fastenings and Anchor Bolts,” as shown on the Drawings, and as recommended by the PRESELECTED EQUIPMENT SUPPLIER. Size and locations as required by PRESELECTED EQUIPMENT SUPPLIER. PRESELECTED EQUIPMENT SUPPLIER shall size all anchor bolts and fasteners required of ample size and strength for the intended purpose, minimum of ½-inch diameter. Fastener sizing calculations shall be provided as an informational submittal. CONTRACTOR shall furnish and install all anchor bolts and fasteners in accordance with the equipment supplier’s installation instructions.

B. Equipment Identification Plates: PRESELECTED EQUIPMENT SUPPLIER shall furnish a 16-gauge stainless steel identification plate securely mounted on the equipment in a readily visible location. The plate shall bear 1/4-inch die-stamped equipment identification number indicated in this Section and/or on the Drawings.

C. Lifting Lugs: Individual equipment and/or each field disassemble part weighing over 60 pounds shall be provided with lifting lugs

D. Initial Supply of Lubricants: PRESELECTED EQUIPMENT SUPPLIER shall indicate types, brands, and quantities of initial lubricants, oil, grease, etc. necessary to startup equipment. CONTRACTOR shall provide and install the recommended lubricants and shall comply with all equipment supplier recommended procedures.

2.8 TOOLS, SPARE PARTS AND MAINTENANCE MATERIALS

A. The PRESELECTED EQUIPMENT SUPPLIER shall supply one (1) set of spare parts for all components exposed to operational wear during normal equipment service.

1. Mechanical seals.
2. Radial wearplates.
3. Rear wearplates.

4. Rotors.
5. Bearings, each size and type.
6. Special tools required for maintenance or adjustment.
7. Other items as recommended by the manufacturer.

B. Equipment Lubricants: The PRESELECTED EQUIPMENT SUPPLIER shall indicate and verify types, brands, and quantities of initial lubricants, oil, grease, etc. necessary to startup equipment. CONTRACTOR shall provide and install the recommended lubricants.

C. Spare parts shall be packed in sturdy containers with clear, indelible identification markings and shall be stored in a dry, warm location until transferred to the OWNER at the conclusion of the project. Each part shall be labeled with part numbers which correspond to the Operation and Maintenance Data submitted in accordance with Section 01 78 23 Operation and Maintenance Data.

PART 3 - EXECUTION

3.1 GENERAL

A. Install and adjust equipment in accordance with the Drawings, approved shop drawings, and the manufacturer's instructions. Do not operate the equipment until the installation is approved by the manufacturer's representative.

B. Comply with the requirements of Section 01 70 00-PS "Execution Requirements."

3.2 INSTALLATION

A. CONTRACTOR shall install in accordance with PRESELECTED EQUIPMENT SUPPLIER's printed instructions, the requirements of Section 01 70 00-PS "Execution Requirements", and as described herein.

B. Level baseplate by means of steel wedges (steel plates and steel shims). Wedge taper not greater the 1/4-inch per foot. Use double wedges to provide a level bearing surface. Accomplish wedging so that there is no change of level or springing of the base when anchor bolts are tightened.

C. Adjust pump assemblies such that the driving units are properly aligned, plumb, and level with the driven units and all interconnecting shafts and couplings. Do not compensate for misalignment by use of flexible couplings.

D. After the pump and driver have been set in position, aligned, and shimmed to the proper elevation, grout the space between the bottom of the baseplate and the concrete foundation with a poured, non-shrinking grout. Remove wedges after grout is set and pack void with grout.

E. Complete equipment installation with controls, safety devices and auxiliary support systems necessary to start the equipment and verify that the equipment functions correctly under no load conditions. Turn rotating equipment by hand to check. Complete cleaning and testing of piping systems. Inspect and clean equipment, devices, piping, and structures of debris and foreign material.

F. Remove temporary bracing supports and other construction debris that may damage

equipment.

G. Remove protective coatings and oils used for protection during shipment and installation.

H. Flush, fill, and grease lubricated systems in accordance with Manufacturer's instructions.

I. Install temporary connections and devices required to fill, operate, checkout and drain the system. Provide temporary valves, gauges, piping, test equipment, and other materials and equipment necessary to conduct testing and startup.

J. Equipment

1. Check equipment for correct direction of rotation and freedom of moving parts.
2. Align equipment to Manufacturer's tolerances. Adjust clearances and torques.
3. Check installation prior to start-up for conformance to Manufacturer's instructions.
4. Adjust or modify equipment to ensure proper operation.

K. Correct any deficiencies or problems noted in Manufacturer's representative's installation reports.

3.3 FIELD QUALITY CONTROL

A. Functional Tests: Conduct on each pump as described below and in accordance with Section 01 75 00 “Starting and Adjusting.”

1. Alignment: Test complete assemblies for correct rotation, proper alignment and connection, and quiet operation.

B. Performance Test: In accordance with Hydraulic Institute Standards.

1. Place each piece of equipment in the system in operation until the entire system is functioning. All components shall continue to operate without alarms or shut downs, except as intended, for eight consecutive hours to be considered started up.
2. Operate the equipment through the design performance range consistent with available flows. Adjust, balance, and calibrate and verify that the equipment, safety devices, controls, and process system operate within the design conditions. Each safety device shall be tested for proper setting and signal. Response shall be checked for each equipment item and alarm. Simulation signals may be used to check equipment and alarm responses.

C. A copy of all information from functional tests, including data, worksheets, and other materials shall be turned over to the OWNER at the completion of the testing program.

3.4 MANUFACTURER’S SERVICES

A. PRESELECTED EQUIPMENT SUPPLIER Services

1. PRESELECTED EQUIPMENT SUPPLIER Field Representative: The PRESELECTED EQUIPMENT SUPPLIER Field Representative shall be present at the project site or classroom designated by OWNER for minimum person-days and trips provided in the table below. Each person-day shall be defined as 8 hours duration, exclusive of travel. The PRESELECTED EQUIPMENT SUPPLIER Field Representative shall revisit the jobsite as often as necessary to correct deficiencies.

Table 1 – Manufacturer Field Services

Work Description	No. of Person Days	No. of Trips
Installation Assistance and Inspection	2	1
Functional and Performance Testing	2	1
Pre-startup Classroom or Site Training	0.5	Can be combined with facility startup
Facility Startup	1	1
Post-Startup Training of OWNER's Personnel	0.5	1

B. Services Provided:

1. Furnish test forms and procedures for field-testing.
2. Furnish startup services.
3. Furnish training of OWNER'S personnel at such times requested by OWNER.

C. Training shall comply with the requirements of Section 01 79 00-PS "Demonstration and Training."

3.5 SYSTEM STARTUP

A. Startup of the facility shall be in accordance with Section 01 75 00 "Starting and Adjusting." After Equipment Installation and before start up, the contractor and PRESELECTED EQUIPMENT SUPPLIER Field Representative shall inspect the installation of the equipment. A preliminary running period (as applicable) will be provided for the CONTRACTOR to make field adjustments with the PRESELECTED EQUIPMENT SUPPLIER Field Representative. CONTRACTOR shall submit a report for PRESELECTED EQUIPMENT SUPPLIER approval of equipment installation.

B. Functional Test. CONTRACTOR to start up equipment with PRESELECTED EQUIPMENT SUPPLIER Field Representative. Equipment shall be able to run in manual mode with all associated piping, electrical and equipment installed to show proper operation of the equipment. Functional Test shall be 5 days of uninterrupted service. The CONTRACTOR shall be responsible for equipment operation for the 5-day period. Any delays or additional person days and trips required for PRESELECTED EQUIPMENT SUPPLIER Field Representative to perform Functional Testing beyond what is specified is the responsibility of the CONTRACTOR. Functional Test can be run with clean water to demonstrate equipment operation.

C. Performance Test and Initial Training. CONTRACTOR and PRESELECTED EQUIPMENT SUPPLIER Field Representative to start up equipment in Automatic Mode (Normal Operation). Equipment shall run in two modes, normal operation and peak flow conditions. Contractor and PRESELECTED EQUIPMENT SUPPLIER Field Representative should demonstrate any alarms, lead lag conditions, or total auto mode or other conditions related to equipment operation. Performance Test shall run with uninterrupted service for 30 days. Performance Test shall be run with wastewater under normal operating conditions. If equipment fails before 30 days, then PRESELECTED EQUIPMENT SUPPLIER shall correct problems at their own expense and restart the 30-day Performance Test. PRESELECTED EQUIPMENT SUPPLIER and CONTRACTOR is responsible for equipment operation during the

30-day Performance Test. PRESELECTED EQUIPMENT SUPPLIER shall perform initial training at the end of the 30-day Performance Test for owner's representative. Training shall be with a draft of the full Operation and Maintenance Manuals. Upon completion of Performance Test and Training, The OWNER shall consider that equipment substantially complete and start the warranty period.

D. Post-Startup Training. PRESELECTED EQUIPMENT SUPPLIER will perform additional training at a time mutually agreeable to the OWNER and PRESELECTED EQUIPMENT SUPPLIER to take place no earlier than 30 days after equipment substantial completion and no later than 90 days after substantial completion.

3.6 CLOSEOUT ACTIVITIES

A. A copy of all information from functional tests including data, worksheets, and other materials shall be turned over to the OWNER at the completion of the testing program.

3.7 SUPPLEMENTS

A. The Following forms are included after "End of Section" and are considered part of this Section:

1. Pump Data Sheet
2. Pump System Curve

END OF SECTION

PUMP DATA SHEET

Parameter	WAS to SST	SST to Blend Tank (Max Static Head) or Future Dewatering (Min Static Head)
Equipment Tag Number(s)	600-WSP-111, -121	800-PMP-001, -002
Quantity	~~3 (1 per basin)~~ 2	2
Pump Name	WAS Pump	Sludge Pump
Location	Membrane Equipment Support Building	Sludge Pump Station
Service Conditions	Intermittent Duty	Intermittent Duty
Liquid Pumped	WAS at 1% solids concentration	WAS at 1% solids concentration
Corrosion or Erosion Factors:	pH 7.0, Abrasive, high chlorides and TDS	pH 7.0, Abrasive, high chlorides and TDS
Pumping Temperature, °F	Max: 85 Min: 55	Max: 85 Min: 55
Largest Diameter Solid Pump shall be Capable of Passing, inches	3	3
Performance Requirements		
Rated Capacity at Min Static Head	100 gpm at 31 ft	30 gpm at 0 ft
Rated Capacity at Max Static Head	100 gpm at 33 ft	200 gpm at 45 ft
Maximum Net Positive Suction Head, FT	10	10
Pump Efficiency, % (Minimum)	25	25
Motor Information		
HP (Maximum)	7.5	5
Speed, RPM	1750	1750
Starts per hour	6	6
Power	480V/3PH/60Hz	480V/3PH/60Hz
Motor Type	Constant speed	Variable speed
Inverter Duty Rated	Yes	Yes
Pump Construction Details		
Pump/Motor Arrangement	Horizontal	Horizontal
Drive Arrangement	Integral Gearmotor	Integral Gearmotor
Suction (Size)	4-inch, 125 lb	4-inch
Discharge (Size)	4-inch, 125 lb	4-inch
Hydrostatic Test Pressure (psig)	1.5 times shutoff head	1.5 times shutoff head
Field Testing	Yes	Yes
Sludge Discharge		
Required, Yes or No	Yes	Yes
Vent and drain connections tapped and plugged	Yes	Yes
Shaft sealing	Mechanical Seals	Mechanical seals

PUMP SYSTEM CURVE – WAS TO SST

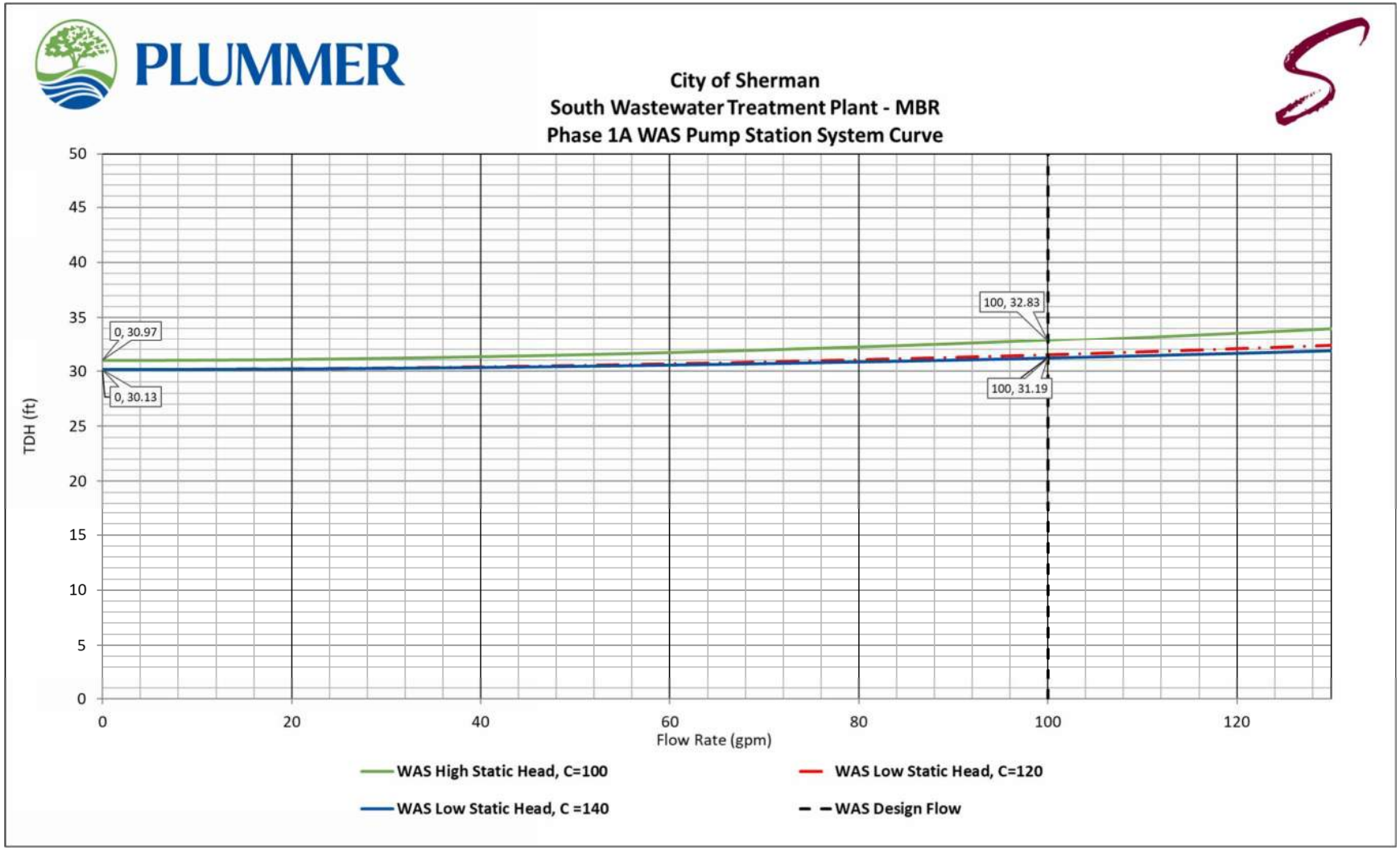

PAGE LEFT INTENTIONALLY BLANK

Section 43 23 15-PS: Pumps, Heavy Duty Rotary Lobe

BID PACKAGE	DESCRIPTION	UNIT	QUANTITY	PROPOSAL AMOUNT
7	For all Work defined in the Bidding Documents to supply complete Pumps, Heavy Duty Rotary Lobe (Section 43 23 15-PS).	LUMP SUM	1	$ 130,000.00

Contractor's expected delivery date: June 2024

RJB Bidder's Initials

Charles.Wampler

From: Sales <sales@vogelsangusa.com>
Sent: Tuesday, January 2, 2024 9:30 AM
To: Kate.White
Cc: Andrew.Lattof
Subject: RE: 13020201 - City of Sherman Project Material Contract

Hi Kate,

Happy New Year!

Could you please advise/confirm on the below points?

1. Please confirm that the duty point revision is for tag 800-PMP-001,002?
2. Do we need to provide SS baseplates for all the pumps or just for the above tags?
3. Do we need to send a bid (hard copy) for this revision, or an electronic submission would be acceptable?
4. When's new bid due or when we need to submit the revised bid by?

I added our quote reference number to the subject line

Remin
Begin forwarded message:

> **From:** "Kate.White" <Kate.White@kiewit.com>
> **Date:** December 27, 2023 at 9:43:59 AM PST
> **To:** Sales <sales@vogelsangusa.com>
> **Cc:** "Andrew.Lattof" <Andrew.Lattof@kiewit.com>
> **Subject: RE: [External]RE: City of Sherman Project Material Contract**

You don't often get email from kate.white@kiewit.com. Learn why this is important

Hello,

We've been notified of the following scope changes that will need to be included:

1. Pump duty point (Dewatering) changed. Provide stainless steel baseplates.
2. Rotary Lobe Duty Points: Min. Static Head: 30 gpm @ 0 ft, Max. Static Head: 200 gpm @ 45 ft

Please let me know if you need any additional information to address this change.

Thanks,

Kate White
Supply Chain Specialist III / Kiewit Supply Network

KIEWIT CORPORATION
(480) 521-3312 (cell)
kate.white@kiewit.com

From: Kate.White
Sent: Wednesday, December 27, 2023 10:24 AM
To: Sales <sales@vogelsangusa.com>
Cc: Andrew.Lattof <Andrew.Lattof@kiewit.com>
Subject: RE: [External]RE: City of Sherman Project Material Contract

Hello,

Please see our response in the comments attached. I am available this week for a quick call to wrap up any remaining items.

Thanks,

<image001.jpg>

Kate White
Supply Chain Specialist III / Kiewit Supply Network

KIEWIT CORPORATION
(480) 521-3312 (cell)
kate.white@kiewit.com

From: Sales <sales@vogelsangusa.com>
Sent: Monday, December 18, 2023 6:36 AM
To: Kate.White <Kate.White@kiewit.com>
Subject: [External]RE: City of Sherman Project Material Contract

Hi Kate,

Further to reviewing the attached contract, please see below our comments

SECTION 19. INTELLECTUAL PROPERTY

1. Seller hereby grants to Contractor and Owner (and shall procure for Contractor and Owner from its subcontractors and suppliers) an irrevocable, perpetual, fully paid, royalty-free, non-exclusive license with respect to all documents, drawings, specifications, software or other items Seller has created or owns for use in the Project's construction, operation, maintenance, ownership, repair or alteration, including any Project unit or component Seller designs, specifies or constructs. Rights to intellectual property developed, utilized, modified or provided in the performance of this Agreement by Contractor, Owner, Seller or any other third party, shall remain the property of the respective party providing such intellectual property.

Vogelsang USA: Can't Accept:

SECTION 34. FORMAL CLASSROOM TRAINING

Seller shall provide formal classroom training for members of Owner's and Contractor's staff in the checkout, start-up, operation and maintenance of Seller's equipment as identified in Attachment C. The formal classroom training shall occur before the start-up of each piece of equipment. Further, in providing the classroom training, Seller shall provide copies of any necessary training materials for the

members of Owner's and Contractor's staff in attendance. If, at s Substantial Completion, not all classroom training days have been used, the unused portion shall be credited to Contractor at the rates defined in Attachment C. If requested by the Contractor, Seller shall provide additional classroom training at rates defined in Attachment C.

Vogelsang USA: This is to be provided by our local factory trained distributor, and was not quoted by Vogelsang USA, LTD

ATTACHMENT B

(PAYMENT SCHEDULE)

Contractor shall pay Seller in accordance with Section 4 of the Agreement and the following Payment Schedule:

Milestone	% of Agreement Price
Upon Approval of Submittals	15%
Upon Release to Fabrication	25%
Upon Complete Delivery and Acceptance to the Project Site	55%
Upon Final O&M Manuals and Turnover Documentation – Not to exceed 180 days from invoice date	5%

Vogelsang USA: Need a minor change to payment terms

ATTACHMENT C

(PRICING BREAKDOWN / OPTION PRICING)

1. **PRICING BREAKDOWN**

Item #	Description	QTY	UOM	Unit Price	Extended Price
1	Heavy Duty Rotary Lobe Pumps	1	LS	$130,000.00	$130,000.00
2	Technical Field Assistance based on ten (10) hour days, including any per diem (*e.g.*, food, lodging, etc.)		Daily		
3	Round Trip Rate to the Project, including labor wages during travel as well as any travel expenses (*e.g.*, airfare, etc.)		R/T		
4	Security (per Section 13 of the Agreement)				
				AGREEMENT PRICE (TOTAL):	**$130,000.00**

2. **OPTION PRICING**

Each unit adjustment price is the total cost of the specific unit of Work to be billed to Contractor for additions or to be deducted from the Agreement Price for deletions. Each unit price is a firm price, includes furnishing complete the specific unit designated, and includes all associated engineering and design costs and overhead and profit markup.

Item #	Description	QTY	UOM	Unit Price	Price Validity
1					
2					
3					

Vogelsang USA: Technical Field Support was not quoted by Vogelsang USA, LTD, it is provided by local factory trained distributor. This should be removed from our contract.

ATTACHMENT D

(DELIVERABLE SCHEDULE)

A. Engineering/Document Deliverables

Deliverable	Delivery Date / Completion Date
Submittals per Technical Specifications	8 Weeks from Agreement Effective Date
Seller's Electronic Bill of Materials per Attachment N	Thirty (30) days prior to Delivery
Care and Maintenance Fill in Data Sheet	(Per Project Requirements)

B. Material/Equipment Deliverables

Deliverable	Delivery Date / Completion Date
Heavy Duty Rotary Lobe Pumps	16-20 Weeks from written release for production. Weeks from Agreement Effective Date

Vogelsang USA: Please update as shown above:

ATTACHMENT F

(FORM OF SUPPLY BOND)

Bond No. Click here to enter text.
Co. No. Click here to enter text.
Job No.105729

KNOW ALL MEN BY THESE PRESENTS, that we, Click here to enter text. as Principal, and Click here to enter text. as Surety, are held firmly bound unto Kiewit Water Facilities South Co. (hereinafter called the Contractor) in the penal sum of Click here to enter text. for which payment well and truly to be made we do bind ourselves, our heirs, executors, administrators, and assigns, firmly by these presents.

THE CONDITION OF THIS OBLIGATION IS SUCH, that:

WHEREAS, the Principal entered into a certain material contract with the Contractor, dated Click here to enter a date. for Click here to enter text. as part of the performance of a contract between the Contractor and Greater Texoma Utility Authority("GTUA")/City of Sherman dated 9/26/2023 for the City of Sherman Wastewater Treatment Plant South - MBR which material contract and the incorporated portions of the contract shall be deemed a part hereof as fully as if set out herein.

NOW, THEREFORE, if the said Principal shall 1) well and truly perform and fulfill all the undertakings, covenants, terms, conditions, warranties and all other obligations contained in or arising out of said material contract during the original term of said material contract including warranty periods and any extensions thereof that may be granted by the Contractor, with or without notice to the Surety, 2) shall well and truly perform and fulfill those obligations that by their nature extend beyond the term of material contract warranty periods, 3) shall also well and truly perform and fulfill all the undertakings, covenants, terms, conditions, warranties and all other obligations of any and all duly authorized additions to and modifications of said material contract that may hereafter be made, notice of which additions and modifications to the Surety being hereby waived, 4) shall promptly make payment to all persons or entities providing the Principal directly or indirectly through other tiers with labor, equipment or materials in the prosecution of the work provided for in said material contract, and

any and all duly authorized additions to and modifications of said material contract that may hereafter be made, 5) shall promptly pay all other obligations incurred by the Principal in connection with such work, and 6) shall defend, indemnify and hold harmless the Contractor and Owner from any claims, demands, liens or suits by any person or entity on account of such labor, equipment, material or other benefits and obligations, then this obligation to be void; otherwise to remain in full force and effect.

The bond specifically covers all damages for which the Principal is liable to the Contractor under said material contract, including, but not limited to legal, design professional and delay damages suffered by the Contractor as a result of the Principal's failure to well and truly perform and fulfill all the undertakings, covenants, terms, conditions, warranties and all other obligations and agreements of said material contract.

Without limitations of the foregoing, in the event that the Contractor exercises its right to terminate for default or take over the work of Principal, the Surety will upon notice take immediate action to fulfill its obligations under the bond and indemnify and reimburse Contractor for costs and damages incurred. The Surety recognizes that time is of the essence and agrees that Contractor is permitted to take reasonable actions after Principal's default which are necessary to maintain the Project schedule and complete the work.

No suit or action shall be commenced under the payment portion of this bond by any claimant unless claimant, other than one having a direct contract with the Principal, shall have given written notice to the Surety, within ninety (90) days after such claimant performed or furnished the last of the labor, equipment, or material for which said claim is made, stating with substantial accuracy the amount claimed and the name of the party for whom the labor, equipment or material was performed or furnished. Such notice shall be served by mailing the same by such form of mailing as which will provide a mailing receipt evidencing the fact of mailing and delivery to any office of the Surety which is regularly maintained for the transaction of business, or served in any manner in which legal process may be served in the state in which the project is located. For claimants who meet the above condition and for claimants with a direct contract with the Principal, the intent of this bond is for such claimants to have the status of third party beneficiaries of this bond.

Unless the Surety has notified the Contractor in writing of a prior claim by the Surety to any sums earned by the Principal under said material contract, the Contractor may, at its option and without notice to the Surety, pay to the Principal any sums earned by the Principal under said material contract, including any retained percentage thereon, prior to the time of final approval and acceptance of the Principal's work and materials by the Owner; and such payment shall not diminish Surety's obligation under the bond.

IN WITNESS WHEREOF, the above parties have executed this instrument under their several seals this Click here to enter text. day of Click here to enter text., 20__, the name and corporate seal of each corporate party being affixed hereto and these presents duly signed by its undersigned representative, pursuant to authority of its governing body.

ATTEST: _____

_____

Principal

_____

_____

(Affix Corporate Seal)

_____ By:_____

_____

ATTEST: _____

_____

Corporate Seal

_____

_____

Address

_____

_____

_____ By*_____

_____

*Bond must be executed by an Officer of the Bonding

Vogelsang USA: Vogelsang will not provide a supplier bond

M. MATERIAL CERTIFICATIONS

As required in the Technical Specifications, Seller shall submit Certified Mill Test Reports, Material Test Reports, or Certificates of Conformance for materials such as steel plates & shapes, piping, fittings, valves, copper, elastomers, etc.

O. NON-DESTRUCTIVE EXAMINATION (NDE)

If required by the applicable Codes, Standards and/or Technical Specifications, Seller shall perform and submit to Contractor the results of all the required NDE on any castings, forgings or billets prior to commence machining. All welds performed by Seller shall be subject to the Non-Destructive Examinations (NDE) prescribed by the applicable Codes, Standards and/or technical specifications. Welding NDE includes, but are not limited to: radiographic inspections, ultrasonic examination, and surface examination (liquid penetrant dye, magnetic particle testing, etc.). An acceptable method of weld identification and film location markers shall be implemented.

In addition to the NDE records, if required by applicable Codes, Standards and/or technical specifications, a record shall be kept for each weld indicating as a minimum: (a) positive identification of the weld and cross reference to the relevant drawing; (b) material, (c) type of weld (d) type of electrode/weld material, any pre-heat or post-weld treatment, name of welder, date and time the weld was made.

Vogelsang USA: These were not quoted and will not be provided

ATTACHMENT S
(ADDITIONAL CONTRACT REQUIREMENTS)

1. *Furnish, Install, Perform, Provide:*

1. The word "furnish," when used in connection with services, materials, or equipment, shall mean to supply and deliver said services, materials, or equipment to the Site (or some other specified location) ready for use or installation and in usable or operable condition.

2. The word "install," when used in connection with services, materials, or equipment, shall mean to put into use or place in final position said services, materials, or equipment complete and ready for intended use.

3. The words "perform" or "provide," when used in connection with services, materials, or equipment, shall mean to furnish and install said services, materials, or equipment complete and ready for intended use.

4. When "furnish," "install," "perform," or "provide" is not used in connection with services, materials, or equipment in a context clearly requiring an obligation of Contractor, "provide" is implied.

5. Specifications are written in modified brief style. Requirements apply to all Work of the same kind, class, and type even though the word "all" is not stated.

6. Simple imperative sentence structure is used which places a verb as the first word in the sentence. It is understood that the words "furnish", "install", "provide", or similar words include the meaning of the phrase "The CMAR shall..." before these words.

2. Unless stated otherwise in the Contract Documents, words or phrases that have a well-known technical or construction industry or trade meaning are used in the Contract Documents in accordance with such recognized meaning.

Vogelsang USA LTD: We have quoted no installation or field services, or training.

Remin

Respectfully,

Inside Sales

VOGELSANG

7966 St. Rt. 44, PO Box 751
Ravenna, OH 44266

Phone: (330) 520-2230
Fax: (330) 296-4113
sales@vogelsangusa.com
www.vogelsangusa.com

From: Sales <sales@vogelsangusa.com>
Sent: Wednesday, December 13, 2023 8:24 AM
To: Kate.White <Kate.White@kiewit.com>
Subject: RE: City of Sherman Project Material Contract

Hi Kate,

Good Morning!

Could you please advise Vogelsang quote ref# for which the attached quote has been sent?

Remin

From: Kate.White <Kate.White@kiewit.com>
Sent: Wednesday, December 13, 2023 10:17 AM
To: Sales <sales@vogelsangusa.com>
Subject: City of Sherman Project Material Contract

You don't often get email from kate.white@kiewit.com. Learn why this is important

Good Morning,

Please see the attached Material Contract for the City of Sherman Wastewater Treatment Plant Project.

Upon your review, please respond with your approval.

Also, please send a copy of your W9 and insurance certificate at your earliest convenience.

Please let me know if you have questions.

Thank you,

<image001.jpg>

Kate White
Supply Chain Specialist III / Kiewit Supply Network

KIEWIT CORPORATION
(480) 521-3312 (cell)
kate.white@kiewit.com

Charles.Wampler

From: Ron Mick <ron.mick@plussixengineering.com>
Sent: Friday, February 16, 2024 8:58 AM
To: Charles.Wampler; Thomas.Young-PTR; Brian.Beach-PTR; Pruitt, Tom; Clint A. Philpott; Alan.Davis-PTR; van der Wege, Sherri; Hugh Brightwell
Cc: Kory.Kyllo; Colin.Bunker; James.Goyer; Michael.Odrowski; Kate.White; Andrew.Lattof
Subject: RE: [External]Answers to Conversion today

Charles,

This looks like good news! If I follow the logic from Vogelsang correctly, they had a computer error in their estimating system that was affected their revised proposal that they have corrected so the total added cost to provide the pumps per the updated specification (provided after bid opening) is now more in line with what would be expected.

Total impact from $242,787.14 to $79,699.73.

I think this should be approved and since the updated specification needs to be made official in Kiewit's contract, a Work Change Directive should be issued with the updated specification.

I have the WCD drafted. Engineering, the specification (42 23 15 – Pumps, Heavy Duty Rotary Lobe) I have is the one sent to Mike Odrowski on 1/4/24. Is that the correct version? I intend to attach it to the WCD.

Thanks,
Ron

Ron Mick, P.E.
Senior Project Manager
Plus Six Engineering, LLC
512-632-5837

From: Charles.Wampler <Charles.Wampler@kiewit.com>
Sent: Friday, February 16, 2024 6:22 AM
To: Thomas.Young-PTR <tyoung@plummer.com>; Brian.Beach-PTR <bbeach@plummer.com>; Pruitt, Tom <tomp@cityofsherman.com>; Clint A. Philpott <clintp@cityofsherman.com>; Alan.Davis-PTR <adavis@plummer.com>; van der Wege, Sherri <svanderwege@plummer.com>; Ron Mick <ron.mick@plussixengineering.com>; Hugh Brightwell <HBrightwell@pape-dawson.com>
Cc: Kory.Kyllo <kory.kyllo@kiewit.com>; Colin.Bunker <Colin.Bunker@kiewit.com>; James.Goyer <James.Goyer@Kiewit.com>; Michael.Odrowski <Michael.Odrowski@kiewit.com>; Kate.White <Kate.White@kiewit.com>; Andrew.Lattof <Andrew.Lattof@kiewit.com>
Subject: FW: [External]Answers to Conversion today
Importance: High

Hi,
Please see below on Vogelsang. Their base bid was $130,000.00; therefore, their change price is **$59,271.00** and the below the line is **$79,699.73** (includes CMAR markups)**.** Can someone please approve, and we will get this moving?
Thanks,
Charles

From: Michael.Odrowski <Michael.Odrowski@kiewit.com>
Sent: Thursday, February 15, 2024 5:22 PM
To: Colin.Bunker <Colin.Bunker@kiewit.com>; James.Goyer <James.Goyer@Kiewit.com>; Charles.Wampler <Charles.Wampler@kiewit.com>
Cc: Kate.White <Kate.White@kiewit.com>; Andrew.Lattof <Andrew.Lattof@kiewit.com>; Kory.Kyllo <kory.kyllo@kiewit.com>
Subject: FW: [External]Answers to Conversion today
Importance: High

Kate and I confirmed with Mark that his v.02 quote of $310,555.65 will be revised to v.03 quote of $189,271.00. Took us both a couple of days to dig into what should be the valid pricing given the changes, but we got there!

121K T&M price drop below the line is good news to COS. Suggest we finalize the PO and work towards improving delivery time.

Mike

Kiewit

MICHAEL ODROWSKI, PE, PMP
Engineering Project Manager

KIEWIT ENGINEERING GROUP INC.
8900 Renner Blvd, Lenexa, KS 66219
Mailstop: K4.4.A.405
913-689-1627 direct
www.kiewit.com

From: Mark McCoy <markm@vogelsangusa.com>
Sent: Thursday, February 15, 2024 4:20 PM
To: Kate.White <kate.white@kiewit.com>; Michael.Odrowski <Michael.Odrowski@kiewit.com>
Cc: fwillms@ei2water.com
Subject: [External]Answers to Conversion today
Importance: High

Earlier this afternoon Michael and I had a conversion on the revision 2 pricing structure. Some of the correspondence I never received due to my hiring with Vogelsang. We had an internal teams call this afternoon with the goal being to understand the pricing structure versus revision 1. As we all are aware there were changes etc. that was requested to get us to this point.
We finally located the issue. The discount structure utilized on the Rev. 01 “was not” incorporated into your pro-alpha system even though it confirmed it had been incorporated. Interesting fact, we would have caught this on the back end once the order had been processed and would we have made the correction during this process. This somehow ended up being a glitch and has since been resolved.
The final revision 2 number is $189,271.00. We apologize for this unique situation and hope this clears up any questions moving forward.
Please feel free to contact me for additional questions.

Respectfully,

Mark McCoy
Southwest Regional Sales Manager

Ravenna, OH 44266

Mobile: 3303106482
Fax: (330) 296-4113
markm@vogelsangusa.com
www.vogelsangusa.com

Quote

Customer:
City of Sherman
Kate White
1800 E FM 1417
Sherman, TX 75090
United States
(903) 892-7275

Bill To:
City of Sherman
1800 E FM 1417
Sherman, TX 75090
USA

VOGELSANG
ENGINEERED TO WORK

Quote #: **130202** v. **02**

Date: 02.05.2024
No. of Pages: 12
Valid To: 05.05.2024
Delivery Terms: PPA (PrePay and Add)
Credit Terms: Cash In Advance
Project Name: City of Sherman South WWTP - MBR Equipme
Ship Via: CH Robinson (Vogelsang Acct)

Revision Remark

02/05/24 ReminR -> 02: We received confirmation on the two questions below:
1.Please confirm that the duty point revision is for tag 800-PMP-001,002? 75 GPM =• 200 GPM, 45TDH
2.Do we need to provide SS baseplates for all the pumps or just for the above tags? Yes 316 SS baseplates
Thanks,

Kate White

11/01/23 ReminR -> 01: Revise to addendum#1 & 2 review
Item 1-7:
Specifications, Section 43 23 15-PS, PUMPS, HEAVY DUTY ROTARY LOBE:1. Refer to Part 1.1.B.2.:
Replace “3 waste activated sludge (WAS) pumps” with “2 waste activated sludge (WAS) pumps.”
2. Refer to “Pump Data Sheet” subsection:
a. Replace Equipment Tag Number(s) in their entirety for WAS to SST with “600-WSP-111, -121.”
b. Replace Equipment Tag Number(s) in their entirety for SST to Blend Tank with “800-PMP-001, 002.”
c. Change “Quantity” for WAS to SST from “3 (1 per basin)” to “2.”
d. Change “Rated Capacity at Max Static Head” for WAS to SST from “33 ft” to “32 ft.”
e. Replace “Pump System Curve – WAS TO SST” and with Attachment 2 – AD-1.

Comment

Please reference our Quote # on the PO.

Any item not specifically listed in the quotation will not be supplied by Vogelsang.

Questions? Please contact Mark McCoy at (330) 310-6482 or markm@vogelsangusa.com

Line #	P/N# / Description	List Price Each	Blended Disc %	Qty	Ext. Net Price	Delivery ARO
	SECTION 43 23 15-PS PUMPS, HEAVY DUTY ROTARY LOBE					
	Provided by others – Installation, controls, anchor bolts, gauges and VFD’s **Provided by others - All field services required of the manufacturer are provided by Vogelsang’s local factory trained distributor, and not included in this scope of supply, and no funds included.** **Base plates will be Stainless Steel (SS 304)**					

Verify materials of construction are compatible with your process, as Vogelsang does not warrant against chemical incompatibility.
Quoted delivery time subject to prior sale.

Quote

Quote #:**130202** v.**02**

Line #	P/N# Description	List Price Each	Blended Disc %	Qty	Ext. Net Price	Delivery ARO

1.7 SITE CONDITIONS
D. Environmental Conditions:
4. In regards to the min ambient temperature, it would be best that the entire pump and piping be heated, either by a heat blanket, enclosure, etc due to the low temperature. The supply and installation of these heating units and accessories should be arranged by a third party.

2.2 PUMPING UNIT CONSTRUCTION
B. Rotorcase
Vogelsang pump housing has top and bottom housing segments allows the pump to remain in in capacity longer without replacing any parts, through adjusting the housing segments to accommodate for wear. Hence, radial liners are not required due to the design of our housing segments. Also, the ability to be hardened is limited for radial liner (230 Hb). We are offering hardned housing and wear plate with hardness upto 700+.

D. Gearcase
1. Only the wetted parts will be SS.

F. Mechanical Seals
Pumps are having VOgelsang cartridge single mechanical block ring type seal. The hard Block Ring surface is wear resistant, especially against fibrous, abrasive and corrosive material. Any abrasion affects only the Block-Ring, not the seal itself.

2.5 MOTORS
Motors are IEEE841 with Cls F insulation and Cls B temp rise. Motors will be provided with heater

Testing & QA Requirements
We will be offering the following tests:
1. Witnessed Hydrostatic Test: Pressure will be 1.5 x operating pressure
2. Witnessed Performance Test: As per HI std
3. 3.1 / 2.2 Material Certification for the wetted parts as per DIN EN 10204
4. PMI as per DIN 51418-1:2008-08 & DIN 51418-2:2015-03
5. LPT on welds as per DIN EN ISO 3452 & 17635
6. Paint thickness as per DIN ISO 2808
7. Visual inspection test as per DIN ISO 2768-1
8. Standard IEEE841 motor test report as per mfg standard

Balancing is a common requirement for centrifugal pumps, not for rotary lobe pumps. Balancing of the shafts of our rotary lobe pumps is not necessary. Our rotary lobe pumps are operated at significantly lower speeds than centrifugal pumps, which makes balancing redundant. The vibrations resulting from the unbalance of the shafts within our tolerances do not cause any problem for the equipment.

City of Sherman South WWTP - MBR Equipment Package 4 / Sludge, Waste Activated / 1 % Solids / 100 gpm @ 13.89 psi (32 ft of head)
Tag: 600-WSP-111, 600-WSP-121

1.0	# 10.1017 VX136-105 In-Line AssemblyPump Assembly	$ 55,006.22	0.00%	2	$ 110,012.44	6 Week(s)

1	USIL.1018 Base Plate with RisersVX136-Q, SK272-180TC 8S, Stainless Steel	5,313.07	0.00%	5,313.07	1	5,313.07
2	PPK0008555 Rotary Lobe PumpVX136-105QP Centering Step	33,324.96	0.00%	33,324.96	1	33,324.96
3	USEM0904 WEG Motor, 5 HP, 1750 RPM3 PH, 460V, 60 HZ, 184TC IP55, TEFC, SF 1.15CL1 D2 GP D, IEEE841	2,998.14	0.00%	2,998.14	1	2,998.14

Verify materials of construction are compatible with your process, as Vogelsang does not warrant against chemical incompatibility.
Quoted delivery time subject to prior sale.

Quote

Quote #:**130202** v.**02**

Line #	P/N# Description			List Price Each	Blended Disc %	Qty	Ext. Net Price	Delivery ARO
4	SK372.1-180TC-6.89 Gear Reducer	805.89	0.00%	805.89		1	805.89	
5	8HS 8HS Hytrel Sleeve Split	405.23	0.00%	405.23		1	405.23	
6	8S42MM Flange, Driven, 8S x 42MM	80.00	0.00%	80.00		1	80.00	
7	8S1 Size 8 sureflex flange 1" bore	124.69	0.00%	124.69		1	124.69	
8	GPA.060.E Pump Connector 136-1054 inch ASME B16.5 RF 150 lbs Permissible Pressure: 8 bar1.4571 glass beaded	2,886.09	0.00%	2,886.09		2	5,772.18	
9	DFD.033.P Pump Flange Gasket136-105 AF42, 2 mm	31.06	0.00%	31.06		2	62.12	
10	NUS.004.EE WasherA Ø 10,5 mm x Ø 20 mm x 2 mm DIN 125 A4	0.41	0.00%	0.41		24	9.84	
11	NSK.083 Hexagon Head BoltM 10 x 25 mm DIN 933 1.4571 70	5.87	0.00%	5.87		24	140.88	
12	PSG.014 Buffer Fluid TankPolycarbonate, Opaque 0,29 l NBR 60 °C, Pressure Range 0 -10 bar	454.87	0.00%	454.87		1	454.87	
13	48x78Pallet 48"x78" Custom PalletWeight Limit 1300lb	105.00	0.00%	105.00		1	105.00	
14	VUSA.0142 Assembly Serial Tag6 x 13 cm .032" Thick Stainless Steel	5.90	0.00%	5.90		1	5.90	
15	VUSA.0247 Pump Assembly Safety Label	13.15	0.00%	13.15		1	13.15	
16	VUSA.0080 Made in USA Label2.875" Circle Label Stock ePlanet Label#LT2785-6CJHG	0.30	0.00%	0.30		1	0.30	
18	TEST HI3641 Hydraulic Institute 3.6.4.1Performance Test - Acceptance Level B	600.00	0.00%	600.00		1	600.00	
19	WITNESS TEST HI3641 Witness HI 3.6.4.1 TestPerformance Test - Acceptance Level B - Does not include anyfunds for travel or lodging	600.00	0.00%	600.00		1	600.00	

Verify materials of construction are compatible with your process, as Vogelsang does not warrant against chemical incompatibility.
Quoted delivery time subject to prior sale.

Quote

Quote #:**130202** v.**02**

Line #	P/N# Description			List Price Each	Blended Disc %	Qty	Ext. Net Price	Delivery ARO
20	TEST HI365 Hydraulic Institute 3.6.5Hydrostatic Test	300.00	0.00%	300.00		1	300.00	
21	WITNESS TEST HI365 Witness HI 3.6.5 TestHydrostatic Test Does not include any funds fortravel or lodging	600.00	0.00%	600.00		1	600.00	
22	TEST SOUND LEVEL Test Sound Levelper Vogelsang test procedure	600.00	0.00%	600.00		1	600.00	
23	WITNESS TEST SOUND Witness Sound Level TestDoes not include any funds for funds for travel or lodging	600.00	0.00%	600.00		1	600.00	
24	TEST HI964 Hydraulic Institute 9.6.4Vibration Testing	400.00	0.00%	400.00		1	400.00	
25	WITNESS TEST HI964 Witness HI 9.6.4 TestVibration Test Does not include any funds fortravel or lodging	600.00	0.00%	600.00		1	600.00	
26	TEST SEISMIC Seismic Calculations by aProfessional Engineer	1,090.00	0.00%	1,090.00		1	1,090.00	

Pump Spare Parts for Line # 1

1.2	# 11.000455 VX136-105 Housing Segments Stainless Steel, Injection **I** TC Coated	$ 12,638.58	0.00%	1	$ 12,638.58	8 Week(s)

Each kit contains the following components

40: (4) DAD.007 - Flat Gasket R136, V/VX136
41: (2) PGP.B123.E.G1 - Pump Housing Segment 136-105

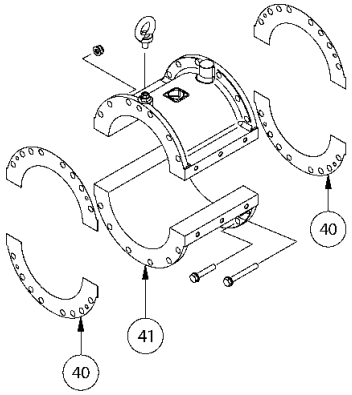

1.3	# 11.000211 VX136Q Bearing Change NBR O-Rings, NBR Lip Seal	$ 1,192.33	0.00%	1	$ 1,192.33	6 Week(s)

Each kit contains the following components

Verify materials of construction are compatible with your process, as Vogelsang does not warrant against chemical incompatibility.
Quoted delivery time subject to prior sale.

Line #	P/N# Description	List Price Each	Blended Disc %	Qty	Ext. Net Price	Delivery ARO
	35: (1) DOR.035 - O-Ring 17: (2) NLG.026 - Radial Spherical Roller 15: (6) NUS.066 - Locking plate 16: (6) NSK.027 - Hexagon Head Bolt 04: (2) NLG.029 - Cylindrical Roller Bearing 05: (2) NSR.010 - Retaining Ring 55: (1) NIR.019 - Inner Ring 06: (1) DWD.060.HNB - Shaft seal ring BABSL 07: (2) NSR.034 - Multi-Disk Ring 02: (1) DOR.086 - O-Ring 32: (1) NPF.046 - Fitting Key : (1) S-4062 - Box 6x6x6 : (3) S-5250 - Cardboard Pad 6 x 6	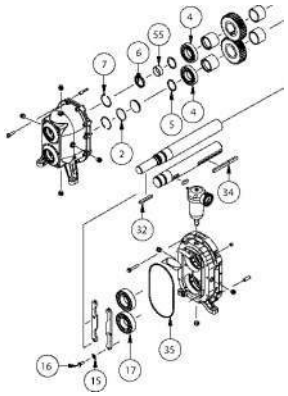				
1.4	# 11.000092 VX136-105 SS Pump Lobe Kit NBR, HiFlo, Black Lobes NBR O-Rings **Each kit contains the following components** 48: (2) PRS.105.E - Strain Bolt 46: (2) DOR.084 - O-Ring 47: (2) DOR.021 - O-Ring 50: (1) DOR.051 - O-Ring 34: (2) NPF.011 - Fitting Key 51: (1) PKB.B102.TL.NB - Rotary Lobe 51: (1) PKB.B102.TR.NB - Rotary Lobe 79c: (2) DOR.041 - O-Ring 79d: (2) NUS.029 - Shim 83: (2) NST.017 - Cover : (1) S-13293 - Box 12x7x5 : (3) S-13339 - Cardboard Pad 6 x 9	$ 1,437.23	0.00%	1	$ 1,437.23	3 Week(s)
		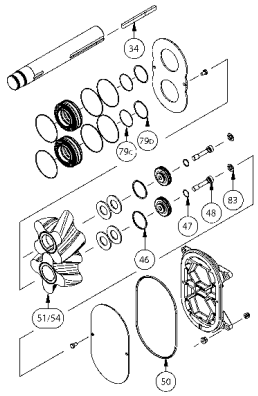				
1.5	# 11.000088 VX136 SS Pump Seal Kit Cartridge SS316 - TC/SiC NBR O-Rings **Each kit contains the following components**	$ 5,443.85	0.00%	1	$ 5,443.85	3 Week(s)

Line #	P/N# Description	List Price Each	Blended Disc %	Qty	Ext. Net Price	Delivery ARO
	46: (2) DOR.084 - O-Ring 50: (1) DOR.051 - O-Ring 48: (2) PRS.105.E - Strain Bolt 47: (2) DOR.021 - O-Ring 79: (2) PBT.B010.E - Cartridge Mechanical Seal 83: (2) NST.017 - Cover 98: (1) VUSA.0508 - Seal Kit Box 9x9x9 99: (1) VUSA.0509 - Seal Kit Box Foam : (1) S-13339 - Cardboard Pad 6 x 9	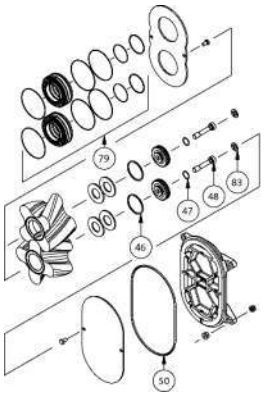				
1.6	# 11.000491 VX136-Q Wear Plates 316 Stainless Steel, TC plated **Each kit contains the following components** 37/57: (2) PFL0268 - Wear plate VX136 : (2) DAD.B004 - Shim : (2) DAD.B005 - Shim 38: (4) NSK.025.EE - Hexagon Head Bolt : (1) S-11216 - Box for VX136 Wear Plates : (1) S-3195 - Cardboard Pad 8 x 8	$ 3,462.31	0.00%	1	$ 3,462.31	8 Week(s)
		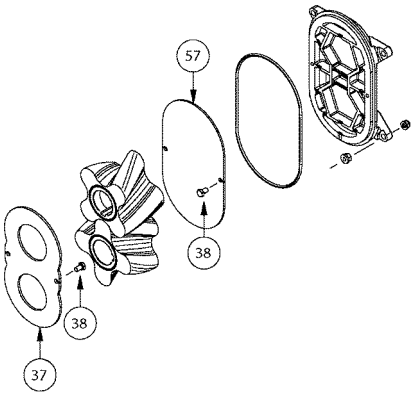				
1.7	# 11.000228 SPECIAL TOOLS, consisting of (One) mechanical seal removal, and (One) Lobe Puller for all VX136 70 - 210Q Pumps. **Each kit contains the following components**	$ 467.11	0.00%	1	$ 467.11	1 Week(s)

Quote

Quote #:**130202** v.**02**

Line #	P/N# Description	List Price Each	Blended Disc %	Qty	Ext. Net Price	Delivery ARO

01: (1) PBA.B001.TL - Lobe Puller
02: (1) PBA.B020.N1 - Installation Tool, Cartridge
03: (2) NSI.155 - Cylinder Head Bolt
04: (3) NSK.155 - Hexagon Head Bolt

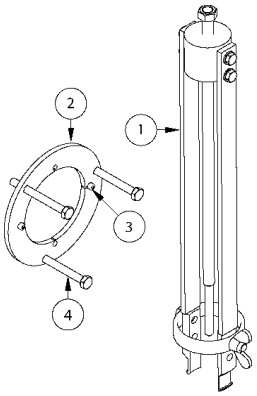

City of Sherman South WWTP - MBR Equipment Package 4 / Sludge, Waste Activated / 1 % Solids / 200 gpm @ 19.53 psi (45 ft of head)
Tag: 800-PMP-001, 800-PMP-002

2.0	# 10.1019	$ 64,190.12	0.00%	2	$ 128,380.24	11 Week(s)
	VX136-210 In-Line AssemblyPump Assembly					

1	USIL.1018 Base Plate with RisersVX136-Q, SK272-180TC 8S, Stainless Steel	5,313.07	0.00%	5,313.07	1	5,313.07
2	PPK0008647 Rotary Lobe PumpVX136-210QP Centering Step	41,346.42	0.00%	41,346.42	1	41,346.42
3	USEM0904 WEG Motor, 5 HP, 1750 RPM3 PH, 460V, 60 HZ, 184TC IP55, TEFC, SF 1.15CL1 D2 GP D, IEEE841	2,998.14	0.00%	2,998.14	1	2,998.14
4	SK372.1-180TC-6.89 Gear Reducer	805.89	0.00%	805.89	1	805.89
5	8HS 8HS Hytrel Sleeve Split	405.23	0.00%	405.23	1	405.23
6	8S42MM Flange, Driven, 8S x 42MM	80.00	0.00%	80.00	1	80.00
7	8S1 Size 8 sureflex flange 1" bore	124.69	0.00%	124.69	1	124.69
8	GPA.016.E Connector 136- 210 Gooseneck6" ANSI B16.5 150 lbs RF Stainless Steel Glass Beaded	3,437.50	0.00%	3,437.50	2	6,875.00
9	DFD.006.P Pump Flange Gasket136-210 AF42, 2 mm	48.31	0.00%	48.31	2	96.62

Verify materials of construction are compatible with your process, as Vogelsang does not warrant against chemical incompatibility.
Quoted delivery time subject to prior sale.

Quote

Quote #:**130202** v.**02**

Line #	P/N# Description			List Price Each	Blended Disc %	Qty	Ext. Net Price	Delivery ARO
10	NUS.004.EE WasherA Ø 10,5 mm x Ø 20 mm x 2 mm DIN 125 A4	0.41	0.00%	0.41	28	11.48		
11	NSK.083 Hexagon Head BoltM 10 x 25 mm DIN 933 1.4571 70	5.87	0.00%	5.87	28	164.36		
12	PSG.014 Buffer Fluid TankPolycarbonate, Opaque 0,29 l NBR 60 °C, Pressure Range 0 -10 bar	454.87	0.00%	454.87	1	454.87		
13	48x78Pallet 48"x78" Custom PalletWeight Limit 1300lb	105.00	0.00%	105.00	1	105.00		
14	VUSA.0142 Assembly Serial Tag6 x 13 cm .032" Thick Stainless Steel	5.90	0.00%	5.90	1	5.90		
15	VUSA.0247 Pump Assembly Safety Label	13.15	0.00%	13.15	1	13.15		
16	VUSA.0080 Made in USA Label2.875" Circle Label Stock ePlanet Label#LT2785-6CJHG	0.30	0.00%	0.30	1	0.30		
18	TEST HI3641 Hydraulic Institute 3.6.4.1Performance Test - Acceptance Level B	600.00	0.00%	600.00	1	600.00		
19	WITNESS TEST HI3641 Witness HI 3.6.4.1 TestPerformance Test - Acceptance Level B - Does not include anyfunds for travel or lodging	600.00	0.00%	600.00	1	600.00		
20	TEST HI365 Hydraulic Institute 3.6.5Hydrostatic Test	300.00	0.00%	300.00	1	300.00		
21	WITNESS TEST HI365 Witness HI 3.6.5 TestHydrostatic Test Does not include any funds fortravel or lodging	600.00	0.00%	600.00	1	600.00		
22	TEST SOUND LEVEL Test Sound Levelper Vogelsang test procedure	600.00	0.00%	600.00	1	600.00		
23	WITNESS TEST SOUND Witness Sound Level TestDoes not include any funds for funds for travel or lodging	600.00	0.00%	600.00	1	600.00		
24	TEST HI964 Hydraulic Institute 9.6.4Vibration Testing	400.00	0.00%	400.00	1	400.00		
25	WITNESS TEST HI964 Witness HI 9.6.4 TestVibration Test Does not include any funds fortravel or lodging	600.00	0.00%	600.00	1	600.00		

Verify materials of construction are compatible with your process, as Vogelsang does not warrant against chemical incompatibility.
Quoted delivery time subject to prior sale.

Quote

Quote #:**130202** v.**02**

Line #	P/N# Description	List Price Each	Blended Disc %	Qty	Ext. Net Price	Delivery ARO
26	TEST SEISMIC 1,090.00 0.00% Seismic Calculations by aProfessional Engineer	1,090.00		1	1,090.00	

Pump Spare Parts for Line # 2

2.2	# 11.000457 VX136-210 Housing Segments Stainless Steel, Injection I TC Coated	$ 17,394.36	0.00%	1	$ 17,394.36	10 Week(s)

Each kit contains the following components

40: (4) DAD.007 - Flat Gasket R136, V/VX136
41: (2) PGP.B121.E.G1 - Pump Housing Segment 136-210

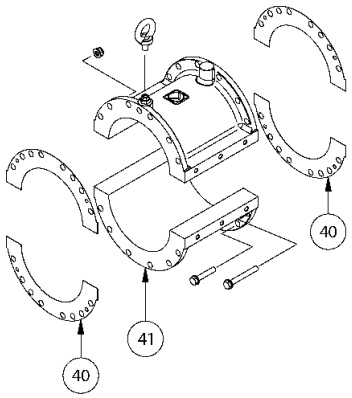

2.3	# 11.000211 VX136Q Bearing Change NBR O-Rings, NBR Lip Seal	$ 1,192.33	0.00%	1	$ 1,192.33	6 Week(s)

Each kit contains the following components

35: (1) DOR.035 - O-Ring
17: (2) NLG.026 - Radial Spherical Roller
15: (6) NUS.066 - Locking plate
16: (6) NSK.027 - Hexagon Head Bolt
04: (2) NLG.029 - Cylindrical Roller Bearing
05: (2) NSR.010 - Retaining Ring
55: (1) NIR.019 - Inner Ring
06: (1) DWD.060.HNB - Shaft seal ring BABSL
07: (2) NSR.034 - Multi-Disk Ring
02: (1) DOR.086 - O-Ring
32: (1) NPF.046 - Fitting Key
: (1) S-4062 - Box 6x6x6
: (3) S-5250 - Cardboard Pad 6 x 6

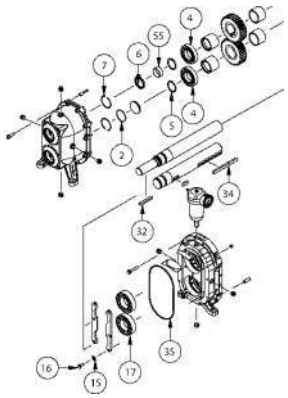

2.4	# 11.000104 VX136-210 SS Pump Lobe Kit NBR, HiFlo, Black Lobes NBR O-Rings	$ 2,676.78	0.00%	1	$ 2,676.78	3 Week(s)

Each kit contains the following components

Line #	P/N# Description	List Price Each	Blended Disc %	Qty	Ext. Net Price	Delivery ARO
	48: (2) PRS.105.E - Strain Bolt 46: (2) DOR.084 - O-Ring 47: (2) DOR.021 - O-Ring 50: (1) DOR.051 - O-Ring 34: (2) NPF.011 - Fitting Key 51: (2) PKB.B102.TL.NB - Rotary Lobe 51: (2) PKB.B102.TR.NB - Rotary Lobe 79c: (2) DOR.041 - O-Ring 79d: (2) NUS.029 - Shim 34: (2) NPF.012 - Fitting Key 83: (2) NST.017 - Cover : (2) S-13293 - Box 12x7x5 : (5) S-13339 - Cardboard Pad 6 x 9	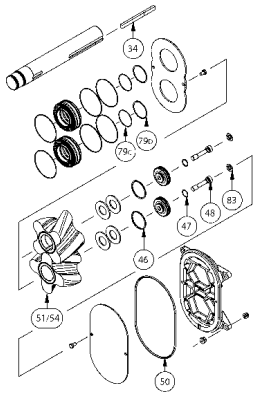				
2.5	# 11.000088 VX136 SS Pump Seal Kit Cartridge SS316 - TC/SiC NBR O-Rings **Each kit contains the following components** 46: (2) DOR.084 - O-Ring 50: (1) DOR.051 - O-Ring 48: (2) PRS.105.E - Strain Bolt 47: (2) DOR.021 - O-Ring 79: (2) PBT.B010.E - Cartridge Mechanical Seal 83: (2) NST.017 - Cover 98: (1) VUSA.0508 - Seal Kit Box 9x9x9 99: (1) VUSA.0509 - Seal Kit Box Foam : (1) S-13339 - Cardboard Pad 6 x 9	$ 5,443.85	0.00%	1	$ 5,443.85	3 Week(s)
		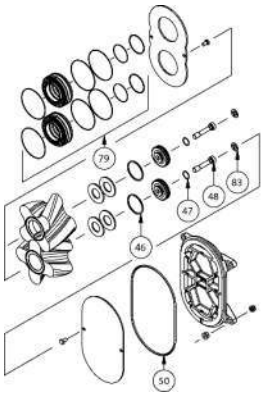				
2.6	# 11.000491 VX136-Q Wear Plates 316 Stainless Steel, TC plated **Each kit contains the following components**	$ 3,462.31	0.00%	1	$ 3,462.31	8 Week(s)

Line #	P/N# Description	List Price Each	Blended Disc %	Qty	Ext. Net Price	Delivery ARO
	37/57: (2) PFL0268 - Wear plate VX136 : (2) DAD.B004 - Shim : (2) DAD.B005 - Shim 38: (4) NSK.025.EE - Hexagon Head Bolt : (1) S-11216 - Box for VX136 Wear Plates : (1) S-3195 - Cardboard Pad 8 x 8					
2.7	# 11.000228 SPECIAL TOOLS, consisting of (One) mechanical seal removal, and (One) Lobe Puller for all VX136 70 - 210Q Pumps.	$ 467.11	0.00%	1	$ 467.11	1 Week(s)
	Each kit contains the following components 01: (1) PBA.B001.TL - Lobe Puller 02: (1) PBA.B020.N1 - Installation Tool, Cartridge 03: (2) NSI.155 - Cylinder Head Bolt 04: (3) NSK.155 - Hexagon Head Bolt					
	Additional Tests which are not inlcuded in line#1 & line#2					
	3.1 / 2.2 Material Certification for Wetted Parts as per DIN EN 10204					
3.2	# Project Charge Project Charge	$ 900.00	0.00%	4	$ 3,600.00	1 Week(s)
	Material identification PMI DIN 51418-1:2008-08 & DIN 51418-2:2015-03					
3.4	# Project Charge Project Charge	$ 1,800.00	0.00%	4	$ 7,200.00	1 Week(s)
	Dye penetrant testing Based on DIN EN ISO 3452 & 17635					
3.6	# Project Charge Project Charge	$ 600.00	0.00%	4	$ 2,400.00	1 Week(s)
	Main dimension as per DIN ISO 2768-1					
3.8	# Project Charge	$ 80.00	0.00%	4	$ 320.00	1 Week(s)

Verify materials of construction are compatible with your process, as Vogelsang does not warrant against chemical incompatibility.
Quoted delivery time subject to prior sale.

Quote

Quote #:**130202** v.**02**

Line #	P/N# Description	List Price Each	Blended Disc %	Qty	Ext. Net Price	Delivery ARO
	Project Charge					
3.9	# TEST PAINT Test Paint Dry Film Thickness per Vogelsang test procedure	$ 250.96	0.00%	4	$ 1,003.84	1 Week(s)
	Project Discount				**-121,397.88 $**	
4.1	# Project Discount Project Discount	$ -24.81	0.00%	1	$ -24.81	1 Week(s)

Net Total with 0.00% Sales Tax

Subtotal:	$	186,771.98
Freight:		2,474.00
Packaging:		25.00
Taxes:		0.00
Quote Total:	**$**	**189,270.98**

Scope

Provided By:
City of Sherman
Kate White
1800 E FM 1417
Sherman, TX 75090
(903) 892-7275

VOGELSANG

Quote #: **130202** v. **02**

Date: 02.05.2024
No. of Pages: 11
Valid To: 05.05.2024
Delivery Terms: PPA (PrePay and Ad
Credit Terms: Cash In Advance
Project Name: City of Sherman South WWTP - MBR Equipme

Any item not specifically listed in the quotation will not be supplied by Vogelsang.

Questions? Please contact Mark McCoy at (330) 310-6482 or markm@vogelsangusa.com

Line #	P/N#	Qty
	Description	

Line #	P/N# Description	Qty

SECTION 43 23 15-PS PUMPS, HEAVY DUTY ROTARY LOBE

Provided by others – Installation, controls, anchor bolts, gauges and VFD's
Provided by others - All field services required of the manufacturer are provided by Vogelsang's local factory trained distributor, and not included in this scope of supply, and no funds included.
Base plates will be Stainless Steel (SS 304)

1.7 SITE CONDITIONS
D. Environmental Conditions:
4. In regards to the min ambient temperature, it would be best that the entire pump and piping be heated, either by a heat blanket, enclosure, etc due to the low temperature. The supply and installation of these heating units and accessories should be arranged by a third party.

2.2 PUMPING UNIT CONSTRUCTION
B. Rotorcase
Vogelsang pump housing has top and bottom housing segments allows the pump to remain in in capacity longer without replacing any parts, through adjusting the housing segments to accommodate for wear. Hence, radial liners are not required due to the design of our housing segments. Also, the ability to be hardened is limited for radial liner (230 Hb). We are offering hardned housing and wear plate with hardness upto 700+.

D. Gearcase
1. Only the wetted parts will be SS.

F. Mechanical Seals
Pumps are having VOgelsang cartridge single mechanical block ring type seal. The hard Block Ring surface is wear resistant, especially against fibrous, abrasive and corrosive material. Any abrasion affects only the Block-Ring, not the seal itself.

2.5 MOTORS
Motors are IEEE841 with Cls F insulation and Cls B temp rise. Motors will be provided with heater

Testing & QA Requirements
We will be offering the following tests:
1. Witnessed Hydrostatic Test: Pressure will be 1.5 x operating pressure
2. Witnessed Performance Test: As per HI std
3. 3.1 / 2.2 Material Certification for the wetted parts as per DIN EN 10204
4. PMI as per DIN 51418-1:2008-08 & DIN 51418-2:2015-03
5. LPT on welds as per DIN EN ISO 3452 & 17635
6. Paint thickness as per DIN ISO 2808
7. Visual inspection test as per DIN ISO 2768-1
8. Standard IEEE841 motor test report as per mfg standard

Balancing is a common requirement for centrifugal pumps, not for rotary lobe pumps. Balancing of the shafts of our rotary lobe pumps is not necessary. Our rotary lobe pumps are operated at significantly lower speeds than centrifugal pumps, which makes balancing redundant. The vibrations resulting from the unbalance of the shafts within our tolerances do not cause any problem for the equipment.

City of Sherman South WWTP - MBR Equipment Package 4 / Sludge, Waste Activated / 1 % Solids / 100 gpm @ 13.89 psi (32 ft of head)
Tag: 600-WSP-111, 600-WSP-121

1.0	# 10.1017 VX136-105 In-Line Assembly	2

Each of the above assemblies contain these individual parts:

No.	Part	Qty
1	USIL.1018 Base Plate with RisersVX136-Q, SK272-180TC 8S, Stainless Steel	1

Verify materials of construction are compatible with your process, as Vogelsang does not warrant against chemical incompatibility.

Scope

Quote #: **130202** v.**02**

Line #	P/N# Description	Qty
2	PPK0008555 Rotary Lobe PumpVX136-105QP Centering Step	1
3	USEM0904 WEG Motor, 5 HP, 1750 RPM3 PH, 460V, 60 HZ, 184TC IP55, TEFC, SF 1.15CL1 D2 GP D, IEEE841	1
4	SK372.1-180TC-6.89 Gear Reducer	1
5	8HS 8HS Hytrel Sleeve Split	1
6	8S42MM Flange, Driven, 8S x 42MM	1
7	8S1 Size 8 sureflex flange 1" bore	1
8	GPA.060.E Pump Connector 136-1054 inch ASME B16.5 RF 150 lbs Permissible Pressure: 8 bar1.4571 glass beaded	2
9	DFD.033.P Pump Flange Gasket136-105 AF42, 2 mm	2
10	NUS.004.EE WasherA Ø 10,5 mm x Ø 20 mm x 2 mm DIN 125 A4	24
11	NSK.083 Hexagon Head BoltM 10 x 25 mm DIN 933 1.4571 70	24
12	PSG.014 Buffer Fluid TankPolycarbonate, Opaque 0,29 l NBR 60 °C, Pressure Range 0 -10 bar	1
13	48x78Pallet 48"x78" Custom PalletWeight Limit 1300lb	1
14	VUSA.0142 Assembly Serial Tag6 x 13 cm .032" Thick Stainless Steel	1
15	VUSA.0247 Pump Assembly Safety Label	1
16	VUSA.0080 Made in USA Label2.875" Circle Label Stock ePlanet Label#LT2785-6CJHG	1

Line #	P/N# Description	Qty
18	TEST HI3641 Hydraulic Institute 3.6.4.1Performance Test - Acceptance Level B	1
19	WITNESS TEST HI3641 Witness HI 3.6.4.1 TestPerformance Test - Acceptance Level B - Does not include anyfunds for travel or lodging	1
20	TEST HI365 Hydraulic Institute 3.6.5Hydrostatic Test	1
21	WITNESS TEST HI365 Witness HI 3.6.5 TestHydrostatic Test Does not include any funds fortravel or lodging	1
22	TEST SOUND LEVEL Test Sound Levelper Vogelsang test procedure	1
23	WITNESS TEST SOUND Witness Sound Level TestDoes not include any funds for funds for travel or lodging	1
24	TEST HI964 Hydraulic Institute 9.6.4Vibration Testing	1
25	WITNESS TEST HI964 Witness HI 9.6.4 TestVibration Test Does not include any funds fortravel or lodging	1
26	TEST SEISMIC Seismic Calculations by aProfessional Engineer	1

Pump Spare Parts for Line # 1

1.2 # 11.000455 — 1

VX136-105 Housing SegmentsStainless Steel, Injection I

TC Coated

Each kit contains the following components

40: (4) DAD.007 - Flat Gasket R136, V/VX136

41: (2) PGP.B123.E.G1 - Pump Housing Segment 136-105

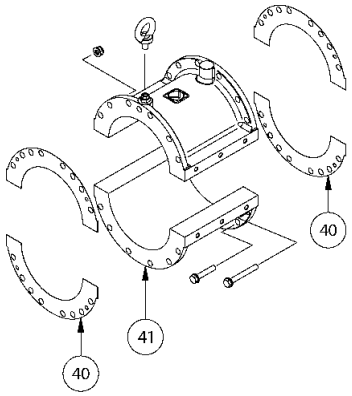

Line #	P/N# Description	Qty
1.3	# 11.000211 VX136Q Bearing ChangeNBR O-Rings, NBR Lip Seal **Each kit contains the following components** 35: (1) DOR.035 - O-Ring 17: (2) NLG.026 - Radial Spherical Roller 15: (6) NUS.066 - Locking plate 16: (6) NSK.027 - Hexagon Head Bolt 04: (2) NLG.029 - Cylindrical Roller Bearing 05: (2) NSR.010 - Retaining Ring 55: (1) NIR.019 - Inner Ring 06: (1) DWD.060.HNB - Shaft seal ring BABSL 07: (2) NSR.034 - Multi-Disk Ring 02: (1) DOR.086 - O-Ring 32: (1) NPF.046 - Fitting Key : (1) S-4062 - Box 6x6x6 : (3) S-5250 - Cardboard Pad 6 x 6	1
1.4	# 11.000092 VX136-105 SS Pump Lobe KitNBR, HiFlo, Black Lobes NBR O-Rings **Each kit contains the following components** 48: (2) PRS.105.E - Strain Bolt 46: (2) DOR.084 - O-Ring 47: (2) DOR.021 - O-Ring 50: (1) DOR.051 - O-Ring 34: (2) NPF.011 - Fitting Key 51: (1) PKB.B102.TL.NB - Rotary Lobe 51: (1) PKB.B102.TR.NB - Rotary Lobe 79c: (2) DOR.041 - O-Ring 79d: (2) NUS.029 - Shim 83: (2) NST.017 - Cover : (1) S-13293 - Box 12x7x5 : (3) S-13339 - Cardboard Pad 6 x 9	1
1.5	# 11.000088 VX136 SS Pump Seal KitCartridge SS316 - TC/SiC NBR O-Rings **Each kit contains the following components**	1

Line #	P/N# Description	Qty
	46: (2) DOR.084 - O-Ring 50: (1) DOR.051 - O-Ring 48: (2) PRS.105.E - Strain Bolt 47: (2) DOR.021 - O-Ring 79: (2) PBT.B010.E - Cartridge Mechanical Seal 83: (2) NST.017 - Cover 98: (1) VUSA.0508 - Seal Kit Box 9x9x9 99: (1) VUSA.0509 - Seal Kit Box Foam : (1) S-13339 - Cardboard Pad 6 x 9	
1.6	# 11.000491 VX136-Q Wear Plates316 Stainless Steel, TC plated **Each kit contains the following components** 37/57: (2) PFL0268 - Wear plate VX136 : (2) DAD.B004 - Shim : (2) DAD.B005 - Shim 38: (4) NSK.025.EE - Hexagon Head Bolt : (1) S-11216 - Box for VX136 Wear Plates : (1) S-3195 - Cardboard Pad 8 x 8	1
1.7	# 11.000228 SPECIAL TOOLS, consisting of(One) mechanical seal removal, and (One) Lobe Puller for allVX136 70 - 210Q Pumps. **Each kit contains the following components** 01: (1) PBA.B001.TL - Lobe Puller 02: (1) PBA.B020.N1 - Installation Tool, Cartridge 03: (2) NSI.155 - Cylinder Head Bolt 04: (3) NSK.155 - Hexagon Head Bolt	1

City of Sherman South WWTP - MBR Equipment Package 4 / Sludge, Waste Activated / 1 % Solids / 200 gpm @ 19.53 psi (45 ft of head)
Tag: 800-PMP-001, 800-PMP-002

Scope

Quote #: **130202** v.**02**

Line #	P/N# Description	Qty
2.0	# 10.1019 VX136-210 In-Line Assembly	2

Each of the above assemblies contain these individual parts:

No.	Part	Qty
1	USIL.1018 Base Plate with RisersVX136-Q, SK272-180TC 8S, Stainless Steel	1
2	PPK0008647 Rotary Lobe PumpVX136-210QP Centering Step	1
3	USEM0904 WEG Motor, 5 HP, 1750 RPM3 PH, 460V, 60 HZ, 184TC IP55, TEFC, SF 1.15CL1 D2 GP D, IEEE841	1
4	SK372.1-180TC-6.89 Gear Reducer	1
5	8HS 8HS Hytrel Sleeve Split	1
6	8S42MM Flange, Driven, 8S x 42MM	1
7	8S1 Size 8 sureflex flange 1" bore	1
8	GPA.016.E Connector 136- 210 Gooseneck6" ANSI B16.5 150 lbs RF Stainless Steel Glass Beaded	2
9	DFD.006.P Pump Flange Gasket136-210 AF42, 2 mm	2
10	NUS.004.EE WasherA Ø 10,5 mm x Ø 20 mm x 2 mm DIN 125 A4	28
11	NSK.083 Hexagon Head BoltM 10 x 25 mm DIN 933 1.4571 70	28
12	PSG.014 Buffer Fluid TankPolycarbonate, Opaque 0,29 l NBR 60 °C, Pressure Range 0 -10 bar	1
13	48x78Pallet 48"x78" Custom PalletWeight Limit 1300lb	1

Verify materials of construction are compatible with your process, as Vogelsang does not warrant against chemical incompatibility.

Scope

Quote #: **130202** v.**02**

Line #	P/N# Description	Qty
14	VUSA.0142 Assembly Serial Tag6 x 13 cm .032" Thick Stainless Steel	1
15	VUSA.0247 Pump Assembly Safety Label	1
16	VUSA.0080 Made in USA Label2.875" Circle Label Stock ePlanet Label#LT2785-6CJHG	1
18	TEST HI3641 Hydraulic Institute 3.6.4.1Performance Test - Acceptance Level B	1
19	WITNESS TEST HI3641 Witness HI 3.6.4.1 TestPerformance Test - Acceptance Level B - Does not include anyfunds for travel or lodging	1
20	TEST HI365 Hydraulic Institute 3.6.5Hydrostatic Test	1
21	WITNESS TEST HI365 Witness HI 3.6.5 TestHydrostatic Test Does not include any funds fortravel or lodging	1
22	TEST SOUND LEVEL Test Sound Levelper Vogelsang test procedure	1
23	WITNESS TEST SOUND Witness Sound Level TestDoes not include any funds for funds for travel or lodging	1
24	TEST HI964 Hydraulic Institute 9.6.4Vibration Testing	1
25	WITNESS TEST HI964 Witness HI 9.6.4 TestVibration Test Does not include any funds fortravel or lodging	1
26	TEST SEISMIC Seismic Calculations by aProfessional Engineer	1

Pump Spare Parts for Line # 2

2.2	# 11.000457 VX136-210 Housing SegmentsStainless Steel, Injection I TC Coated **Each kit contains the following components**	1

Line #	P/N# Description	Qty
	40: (4) DAD.007 - Flat Gasket R136, V/VX136 41: (2) PGP.B121.E.G1 - Pump Housing Segment 136-210	

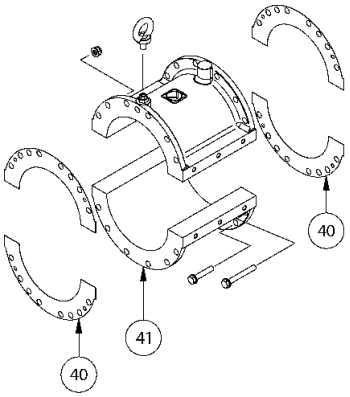

2.3	# 11.000211 VX136Q Bearing ChangeNBR O-Rings, NBR Lip Seal **Each kit contains the following components** 35: (1) DOR.035 - O-Ring 17: (2) NLG.026 - Radial Spherical Roller 15: (6) NUS.066 - Locking plate 16: (6) NSK.027 - Hexagon Head Bolt 04: (2) NLG.029 - Cylindrical Roller Bearing 05: (2) NSR.010 - Retaining Ring 55: (1) NIR.019 - Inner Ring 06: (1) DWD.060.HNB - Shaft seal ring BABSL 07: (2) NSR.034 - Multi-Disk Ring 02: (1) DOR.086 - O-Ring 32: (1) NPF.046 - Fitting Key : (1) S-4062 - Box 6x6x6 : (3) S-5250 - Cardboard Pad 6 x 6	1

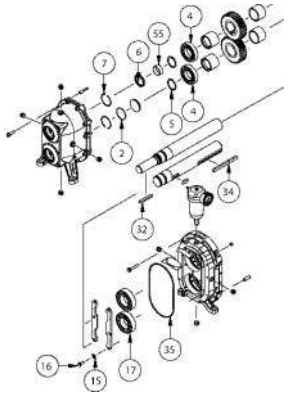

2.4	# 11.000104 VX136-210 SS Pump Lobe KitNBR, HiFlo, Black Lobes NBR O-Rings **Each kit contains the following components** 48: (2) PRS.105.E - Strain Bolt 46: (2) DOR.084 - O-Ring 47: (2) DOR.021 - O-Ring 50: (1) DOR.051 - O-Ring 34: (2) NPF.011 - Fitting Key 51: (2) PKB.B102.TL.NB - Rotary Lobe 51: (2) PKB.B102.TR.NB - Rotary Lobe 79c: (2) DOR.041 - O-Ring 79d: (2) NUS.029 - Shim 34: (2) NPF.012 - Fitting Key 83: (2) NST.017 - Cover : (2) S-13293 - Box 12x7x5 : (5) S-13339 - Cardboard Pad 6 x 9	1

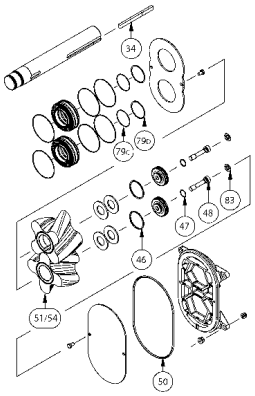

Line #	P/N# Description	Qty
2.5	# 11.000088 VX136 SS Pump Seal KitCartridge SS316 - TC/SiC NBR O-Rings **Each kit contains the following components** 46: (2) DOR.084 - O-Ring 50: (1) DOR.051 - O-Ring 48: (2) PRS.105.E - Strain Bolt 47: (2) DOR.021 - O-Ring 79: (2) PBT.B010.E - Cartridge Mechanical Seal 83: (2) NST.017 - Cover 98: (1) VUSA.0508 - Seal Kit Box 9x9x9 99: (1) VUSA.0509 - Seal Kit Box Foam : (1) S-13339 - Cardboard Pad 6 x 9	1
2.6	# 11.000491 VX136-Q Wear Plates316 Stainless Steel, TC plated **Each kit contains the following components** 37/57: (2) PFL0268 - Wear plate VX136 : (2) DAD.B004 - Shim : (2) DAD.B005 - Shim 38: (4) NSK.025.EE - Hexagon Head Bolt : (1) S-11216 - Box for VX136 Wear Plates : (1) S-3195 - Cardboard Pad 8 x 8	1
2.7	# 11.000228 SPECIAL TOOLS, consisting of(One) mechanical seal removal, and (One) Lobe Puller for allVX136 70 - 210Q Pumps. **Each kit contains the following components**	1

Scope

Quote #: **130202** v.**02**

Line #	P/N# / Description	Qty
	01: (1) PBA.B001.TL - Lobe Puller 02: (1) PBA.B020.N1 - Installation Tool, Cartridge 03: (2) NSI.155 - Cylinder Head Bolt 04: (3) NSK.155 - Hexagon Head Bolt	

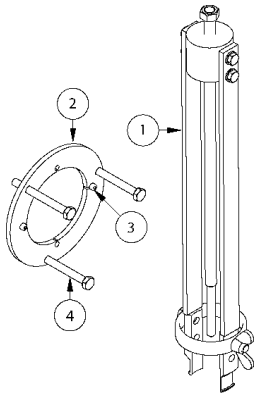

Additional Tests which are not inlcuded in line#1 & line#2

3.1 / 2.2 Material Certification for Wetted Parts as per DIN EN 10204		
3.2	# Project Charge Project Charge	4
Material identification PMI DIN 51418-1:2008-08 & DIN 51418-2:2015-03		
3.4	# Project Charge Project Charge	4
Dye penetrant testing Based on DIN EN ISO 3452 & 17635		
3.6	# Project Charge Project Charge	4
Main dimension as per DIN ISO 2768-1		
3.8	# Project Charge Project Charge	4
3.9	# TEST PAINT Test PaintDry Film Thickness per Vogelsang test procedure	4
4.1	# Project Discount Project Discount	1

PLUMMER

Potential Change Order (PCO) Request

PROJECT NO: 1422-005-02

PROJECT: South Wastewater Treatment Plant - MBR
OWNER: City of Sherman
CONTRACTOR: Kiewit Construction South
ENGINEER: Plummer Associates, Inc.
PCO NO.: 06

DESCRIPTION:

NOTIFICATION BY CONTRACTOR

The Contractor proposes to make the additions, modifications, or deletions to the Work described in the Contract Documents, as shown in Attachment "A" and requests that you take the following action:

- ☐ Notify us that you concur that this change does not require a change in Contract time or amount and issue a Field Order.
- ☒ Issue a Change Order for performing the described change. Change in Contract amount is indicated in the attached detailed cost breakdown of labor, materials, equipment and all other costs associated with this change. Impacts on Contract Time are shown in the attached revised schedule.
- ☐ Authorize the Contractor to proceed with the described change. Payment will be requested at the unit price bid.
- ☐ Authorize the Contractor to proceed with the change under the time and materials provisions of the Contract.

By: Kory Kyllo Date: 3/28/2024

ENGINEER'S RESPONSE

We respond to your request as follows:

- ☐ We concur that this is a no cost or time change. See attached/forthcoming Field Order No. / comments.
- ☒ Your proposal is recommended to the Owner. See attached/forthcoming proposed Change Order.
- ☐ Proceed with the change at the unit price bid.
- ☐ Proceed with the change under the time and materials provisions of the Contract.
- ☐ Additional information is required to evaluate this request. Provide information as described in the attached comments and resubmit.
- ☐ Potential Change Order Request is not accepted.

Construction Manager: Brian Beach, PE CCM Date: 4/3/2024

Engineer: Date: 4-3-2024

Program Manager: Date: 4-4-24

Owner: Digitally signed by Tom Pruitt Date: 2024.04.04 10:40:51-05'00' Date: 4/4/2024

POTENTIAL CHANGE ORDER

Kiewit

Date: March 26, 2024	Potential Change Order #: PCO-0006	Revision #: 0
To: City of Sherman (COS) 220 W. Mulberry Street Sherman, TX 75090	Contract #: 1513-U Construction Manager at Risk (CMAR)	Project: South WWTP - MBR
Drawing, Specification, Equipment Number or Other Reference: WCD 12 MBR Covers Change in Material bid.		

Description of the Proposed Change Order Work: MBR Covers Change in Material bid

CMAR received WCD 012. CMAR is providing this PCO along with the Basis of Estimate and attachments in accordance with General Conditions 1.01 A. 51., 10.01 A. and B., and 10.03 A.
The material lead time has not changed. Impacts on installation have not been evaluated and are not included.
The CMAR support services are T&M per Amendment 1 and are not included in this PCO.

This additional scope results in an addition for GMP C – Equipment Package 1.

Construction				**Estimated Effect on Contract Price**
Lump Sum ($)	Contingency 9% ($)	Additional GCs (12.2% When>$155m)	Fee 9.95% ($)	Change Impact ($)
$95,000.00	$8,550.00	$12,633.10	$11,560.22	**$127,743.32**

Detailed components of above categories must accompany this estimate (discipline, craft, commodity of material, etc.)

Estimated Effect on Project Schedule (calendar days)		**Estimated Effect on Contract Terms**
Substantial Completion	N/A	N/A
Final Completion	N/A	N/A

Recommended by: Kiewit Water Facilities South Co.

Project Manager: _____ 3/28/2024
Contractor Date

Recommended by: Design Engineer

Name _____ *Date* _____

Approved by: Program Manager

Name _____ *Date* _____

Recommended by: Program Construction Manager

Name _____ *Date* _____

Approved by: City of Sherman

Name _____ *Date* _____

Approval Signatures are on the PCO cover sheet from Plummer

Basis of Estimate: MBR Covers Change in material bid

Summary

1. Aluminum tank Covers with no supporting frame	Total	$95,000.00
	Grand Total	**$95,000.00**

1. Aluminum tank Covers with no supporting frame

Total	$95,000.00

The Work Change Directives make the following additions, modifications, or deletions to the Work described in the Contract Documents:

- Replace the FRP tank covers with the aluminum tank covers with no supporting frame. Aluminum tank covers will support a 50-pound PSF uniform live load but not support the membrane cassette.

Attachments

1. COSK-PLA-WCD0012 MBR Cover decision e-mail 20240315
2. COSK-PSE-WCD0012 MBR Aluminum Covers
3. GC-GC-VEO-KWT-0005.00-CO-01 Agreement No. 7400007272, Project No. 105729 Tank Covers Change Odrer by Veolia 5 March 2024
4. GC-GC-VEO-KWT-0005.00-COSK - Veolia Weekly Task Force MM (03_05_24)
5. GC-GC-VEO-KWT-0005.00-Reference Drawings

KIEWIT WATER FACILITIES SOUTH CO.
2050 Roanoke Rd, Westlake, TX 76262

Ron Mick

From: van der Wege, Sherri <svanderwege@plummer.com>
Sent: Friday, March 15, 2024 9:31 AM
To: Ron Mick; Rigdon, Jeff; Whiddon, Nathan; Pruitt, Tom; Michael.Odrowski; Hugh Brightwell; Amir Shokouhi @PD
Cc: Geile, Quentin; Davis, Alan; Gudal, David; Beach, Brian; Young, Thomas; Monaco, Paula; Brenna Wagner; Freddy Mena; Megan Martin
Subject: COSK - MBR Cover Decision

Hi All,

This morning in the Model Review meeting, we reviewed the MBR Basin cover material choices. The City prefers the aluminum covers rather than FRP covers, and the Engineer supports this decision. Please move forward with procuring the aluminum covers that do not support the cassettes.

Sherri van der Wege, PE*
Senior Project Manager

14755 Preston Road, Suite 420
Dallas, Texas 75254

C: 972.834.7580

svanderwege@plummer.com
www.plummer.com

*TX PE 102702

This message, and any attachments to it, may contain information that is privileged, confidential, and exempt from disclosure under applicable law. If the reader of this message is not the intended recipient, you are notified that any use, dissemination, distribution, copying, or communication of this message is strictly prohibited. If you have received this message in error, please notify the sender immediately by return e-mail and delete the message and any attachments.
Please consider the environment before printing this e-mail.

Project:	South Wastewater Treatment Plant - MBR	**Project Number:**	
Owner:	Greater Texoma Utility Authority/City of Sherman	1513-U	
Contractor:	Kiewit Water Facilities South Co.	105718	
Engineer:	Plummer Associates	1422-005-02	

Work Change Directive No.: 12 **Description:** MBR Covers Change in material bid

Specification: 46 53 49.10 and 46 73 13

Drawing No.: N/A **Detail Description:** Provide Aluminum MBR Covers

Make the following additions, modifications, or deletions to the Work described in the Contract Documents:

At the MBR basins, provide aluminum covers per Section 46 73 13 – Aluminum Covers(included in WCD 003C).

Purpose of Work Change Directive:

Based on Section 46 53 49.10 – Membrane Biological Reactors, Hollow Fiber Type, Paragraph 1.8.c.2. The MBR basins will be covered with metal or fiberglass plates, supplied by MBR manufacturer. The selected manufacturer, Veolia, included fiberglass covers in the original bid amount. The project team has determined that aluminum covers are more appropriate for the application.

The Owner directs the Contractor to proceed with Work described in this Work Change Directive. Compensation for this Work will be determined using the methods described below. Costs for the Work Change Directive may not exceed the total authorized compensation shown for this Work Change Directive shown below without authorization of the Owner by other Work Change Directives or by Change Order. Contractor is to submit a Change Proposal when impacts on Contract Price and Contract Times can be determined. A Change Order or Contract Amendment is to be issued to incorporate changes in Contract Price and / or Contract Times.

Basis of Compensation:

☐ Unit Prices ☒ Lump Sum calculated using Cost of Work provisions in General Conditions Paragraph 12.01

☐ Time and Materials using Cost of Work provisions in General Conditions Paragraph 12.01

☐ Allowance based on provisions in General Conditions Paragraph 11.02.

Required Documentation:

☒ Detailed cost breakdown attached showing labor, materials, equipment and all other costs for this change

☒ Schedule attached to show impacts and justification for requested change in Contract Times if applicable

Compensation for this Work Change Directive may not exceed: $ N/A

Project:	South Wastewater Treatment Plant - MBR	**Project Number:**	
Owner:	Greater Texoma Utility Authority/City of Sherman	1513-U	
Contractor:	Kiewit Water Facilities South Co.	105718	
Engineer:	Plummer Associates	1422-005-02	

Recommended by: Design Engineer

Name: [signature] Date: 3-18-2024

Recommended by: Project Construction Manager

Name: [signature] Date: 3/18/24

Approved by: Kiewit Water Facilities South Co.

Name: Kory.Kyllo Digitally signed by Kory.Kyllo DN: CN=Kory.Kyllo, OU=Employees, OU=Users, OU=Kiewit, DC=KIEWITPLAZA, DC=com Date: 2024.03.20 14:18:03-05'00' Date: 03/20/2024

Approved by: Program Manager

Name: [signature] Date: 3/18/24

Approved by: Greater Texoma Utility Authority

Name: [signature] Digitally signed by Paul Sigle DN: O=GTUA, CN=Paul Sigle, E=paul@gtua.org Reason: I am approving this document Location: Date: 2024.03.18 10:34:39-05'00' Foxit PDF Editor Version: 2023.2.0 Date: 3/18/24

Approved by: City of Sherman

Name: [signature] Digitally signed by Tom Pruitt Date: 2024.03.18 10:29:14-05'00' Date:

Mr. Joseph Shuler
Kiewit Corporation
2107 Road O NE, Moses Lake
WA 98837, USA

5 March 2024

Subject: Aluminum Tank Covers for MBR Tanks **Agreement No. 7400007272, Project No. 105729**

Dear Joseph,

I hope this email finds you well. I am writing to discuss the options of changing the membrane FRP tank covers to aluminum tank covers. We believe that this change will bring several benefits and address the concerns raised by the City of Sherman.

The main drivers for this change are as follows:

1. A recent structural review has concluded that the FRP covers are not rated to take the weight of a sludged cassette weight on the top of them (approximately 9500 lbs).
2. More durability: Aluminum tank covers offer better durability and protection against UV radiation, ensuring a longer lifespan for the tanks.
3. Safety and recommended load handling: Aluminum Tank Covers with Tube Support provide the safest option for handling any unforeseen load. They provide foolproof flexibility in handling weight and full cassette weight, especially in indoor areas where crane maneuverability may be limited.

Please find below 2 options for Aluminum tanks covers for comparison purposes and their respective technical specifications.

Specification	Aluminum tank Covers with No supporting Frame	Aluminum tank Covers with supporting Frame
Dimensions	9'-0" x 48'-4"	9'-0" x 48'-4"
Number of covers	3	3
Handling of 1 Sludge cassette 9500 lbs	No	Yes

Specification	Aluminum tank Covers with No supporting Frame	Aluminum tank Covers with supporting Frame
Live Load	a 50-pound PSF uniform live load, with an L/240 deflection limitation	a 50-pound PSF uniform live load, with an L/240 deflection limitation
Concentrated Load	Designed for 400-pound concentrated load on a 6” x 6” square area	Designed for 400-pound concentrated load on a 6” x 6” square area. (non-cassette bearing areas only. The panels will be designed to support the membrane cassette at specific locations of the panels.)
Supporting Frame at Bottom or Tubes	No	Yes
Panel Weight Limitation	150 lbs	200 lbs
No of Removable panels	2/cover	2/Cover
Recessed Handles & connection points on each panel located for Panel removal by Plant personnel or overhead crane	Yes	Yes
One panel above each membrane cassette shall contain penetrations as required for eight-inch liquid piping quick disconnect and six-inch air piping quick disconnect.	Yes	Yes
Handrails included	No	No
Aluminum-decking surface of the structure is a patented double walled “hollow deck” , which is ribbed to provide an aggressively nonskid surface	Yes	Yes
6061-T6 corrosion resistant aluminum alloy construction with mill finish	Yes	Yes
316 stainless steel anchor bolts	Yes	Yes
Santoprene Gaskets (UV Stabilized)	Yes	Yes

Specification	Aluminum tank Covers with No supporting Frame	Aluminum tank Covers with supporting Frame
Production of Shop drawings	Yes	Yes
Final approved drawings stamped by a Texas Professional Engineer	Yes	Yes
Warranty	1 year	1 year
Additional cost to the contract	**$95,000 USD**	**$125,000 USD**

Kindly note that the above Additional cost has taken into account already the credit of the price of FRP tanks covers included in the proposal. This net additional change order.

We believe that implementing these changes will not only address the concerns raised by the City of Sherman but also provide a more durable and reliable solution for the MBR tanks.

Please let us know if you have any further questions or require additional information. We look forward to your feedback and guidance on this matter.

Thank you for your attention to this request.
Best regards,

Yousra Abouelnaga
Project Manager
+1(365)228-2936
Yousra.abouelnaga@veolia.com

Sherman South WWTP - Weekly Veolia Task Force Meeting - 3/5/2024

Tuesday, March 5, 2024 8:56 AM

Meeting Date: 3/5/2024 9:00 AM
Location: Microsoft Teams Meeting
Link to Outlook Item: *click here*
Invitation Message
Participants

Notes

Veolia Task Force Meeting Agenda

Safety

1. Safety Moment -
    a. Welcome Yousra!!! Located in Oakville ON
    b. Welcome Alison!!!

Design

1. Deliverables in Review
    a. Membrane Tank GA (expedited Kiewit Review w/ Plummer now)
        a. Plummer will finish this in the next few days (make sure Brian is finished)
    b. I/O List
    c. Electrical Load List
    d. BOM
    e. Revised P&IDs
    f. PFD
    g. Control Philosophy
        a. Drawing reviews for the above will be completed today

2. Upcoming Deliverables
    a. Veolia submittals for the following
        i) Panel schematics
            i. Pending review of submits that have been sent out (load list and I/O list)
        ii) Backpulse Tank - coming soon
3. Mike to make sure Yousra has Team Binder access (Kiewit Action)

Procurement

1. Working through comment on cut sheets

Work Planning and Construction Schedule

1. Meeting between Kiewit, Veolia, Plummer, City of Sherman, and Potential Cover Vendor
    a. 2 options
        i) Option 1) FRP covers that cannot support the weight of a cassette
            i. Would need to check on how long these last
                i) Normally FRP blend will have UV protection
            ii. No additional cost

ii) Option 2) Aluminum covers (non-hinged) - Can provide the weight of a cassette
    i. Safest in Veolia's opinion
    ii. Benefit is that these are "fool proof" in regards to the flexibility of being able to hold the weight of a full cassette
    iii. This is Veolia's recommendation
    iv. City is worried of the risk that these could fall into the cassette
    v. Walls between the tanks, or anywhere on the top area, would need to get thicker if we placed a cassette on top
    vi. The sections of this cover do not need to be as small as was proposed before
    vii. Inspection hatches could be added to Option 2 and the cover system could still support the weight of a cassette
    viii. A secondary version that was aluminum, which could not support the weight of a cover, would be looked at

iii) Preference would be to have aluminum
    i. Need to get pricing for Option 2A (can hold the weight of a cassette) (Action Veolia)
        i) 125K additional
            a) Includes price for additional support needed to hold a cassette (not just the cover)
            b) Includes credit for the FRP covers
            c) Beams of the cassette will support the covers
            d) Confirmed that the panels are split, or two covers per cassette
        ii) Structural items (outside cost of covers themselves)
            a) Walls of the tank were designed so that the cassette would sit at the bottom but the walls need to get thicker in order to support the cassette from the wall hangers
            b) Need to make sure structural design could support the weight of a cassette (Plummer Action)
            c) Addition of weight-bearing covers would not drive tank/structural redesign
    ii. Need to get pricing for Option 2B (cannot hold the weight of a cassette) (Action Veolia)
        i) 95K additional
        ii) This would be aluminum as opposed to FRP
        iii) No inspection hatch
        iv) Split Panel vs. Single Panel
            a) Split panel would weigh ~150 lbs
                1- Go with split panel
            b) Single panel would weigh ~300 lbs and would need tubbing support and would be lifted by a crane
        v) ~~Veolia to follow-up with the vendor today (Veolia Action) - Complete~~
            a) ~~Expecting to have something in the next few days~~
    iii. Veolia can provide the proposals for covers today (Veolia Action)
    iv. City to discuss this week to make the final decision (COS Action)

b. Reason for the Covers
    i) To protect the cassettes from foreign debris
    ii) Can inspect the cassettes while they are hanging, but a more thorough inspection can occur when they are placed on the ground/a surface
        i. Also a safety consideration (open tank)
    iii) Odor control is not a goal/necessary, but is a plus
c. Still need to get cost details for the covers (will depend on what option we go with)

RFIs

1. RFIs to go through Team Binder
    a. Veolia to submit an RFI for the electrical acceptations and clarifications (Veolia Action)
        i) Kiewit working on workflow for this (currently not set up) (Kiewit Action)

Quality

1. N/A

As-Built and Redlines

1. N/A

Value Engineering

1. Schedule vs. cost
    a. Would need to evaluate on a case-by-case basis
        i) Lots of times we would like to run this through the RFI process
    b. Goal would be to surface any items that come to mind, even if it impacts schedule and it can be evaluated

Parking Lot Items

1. Ball Valves
    a. Instrument isolation valves do not match with process valve spec
        i) Veolia to provide examples/lists on this to Plummer (Veolia Action)
            i. Still working on it
2. Backpulse Tank - Supplied by Veolia, installed by others
3. Membrane delivery - Confirmed they would be onsite in November 2024
    a. Confirm when they need to be delivered
    b. Right now the project schedule shows delivery and installation between November 5th and mid-December (~6 weeks)
    c. Installation would be around two (2) days

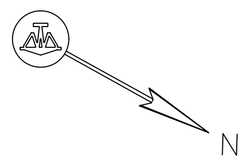

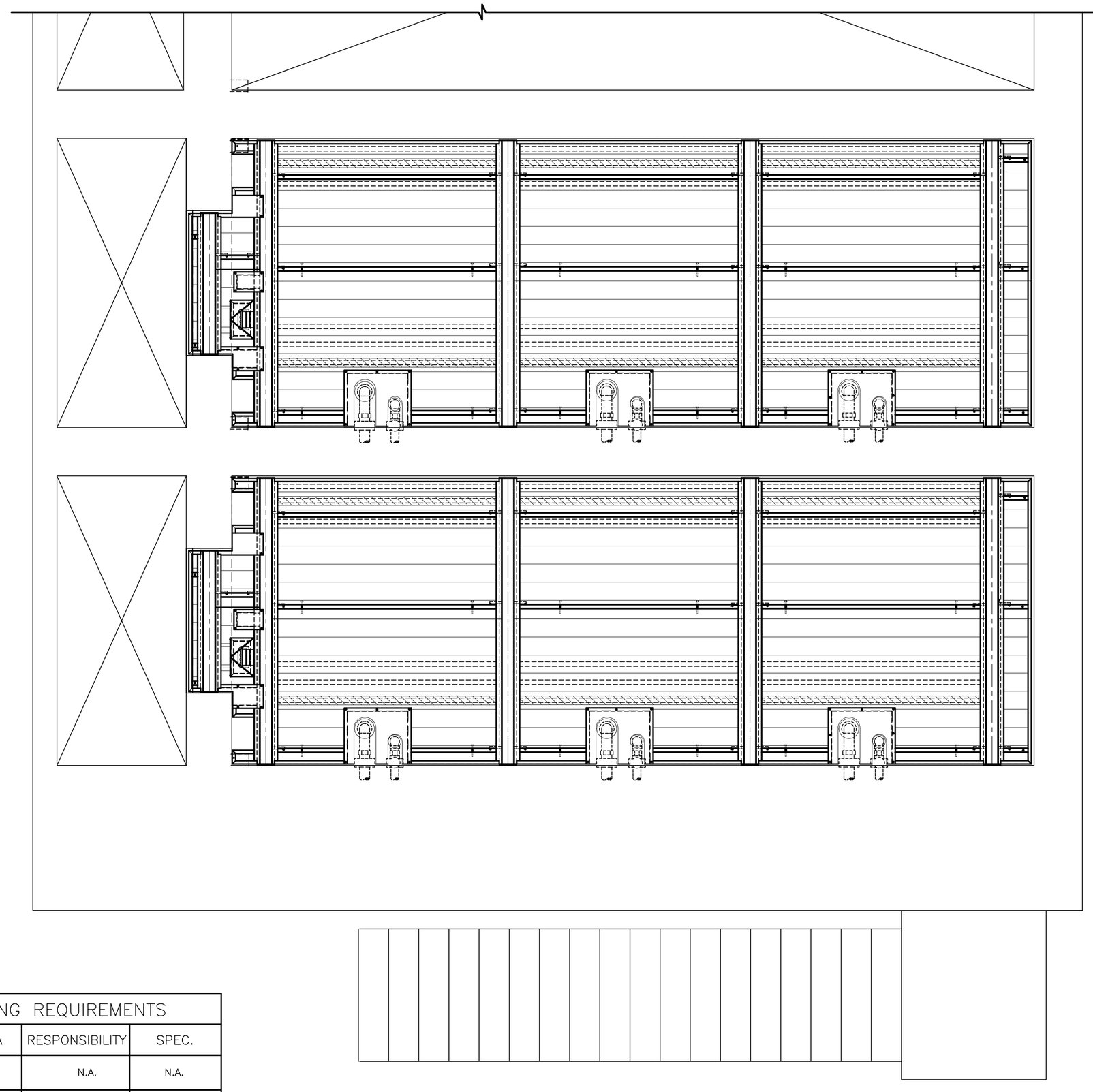

GENERAL NOTES AND SPECIFICATIONS:

1) ALUMINUM COVER DESIGN LOADS:

LIVE LOAD:	40 psf
DEAD LOAD:	4.0 psf
CONC. LOAD:	400 # (NON-CONCURRENT WITH LIVE LOAD)
CONC. LOAD AREA:	12" X 12" AREA
WIND LOAD BASIS:	160 MPH
COREFERENCED CODE:	IBC 2012, ASCE 7-10
MAX. PANEL WEIGHT:	140 lbs
DEFLECTION LIMIT:	L/240

2) MATERIALS:

ALUMINUM: ALUMINUM DESIGN SHALL CONFORM TO THE ALUMINUM DESIGN MANUAL, THE ALUMINUM ASSOCIATION, 2010. ALL ALUMINUM COMPONENTS TO BE TYPE 6061-T6.

WELDS: WELDING SHALL BE DONE IN ACCORDANCE WITH THE AMERICAN WELDING SOCIETY D1.2 STRUCTURAL WELDING CODE. ALUMINUM WELD FILLER METAL TO BE ALLOY 4043.

FASTENERS: ALL FASTENERS AND ANCHORS SHALL BE STAINLESS STEEL TYPE 316.

3) VERIFICATION:
HALLSTEN TO VERIFY ALL DIMENSIONS, LOCATIONS AND ELEVATIONS PRIOR TO FABRICATION. ALL EQUIPMENT THAT WILL INTERFACE WITH THE ALUMINUM COVER SYSTEM MUST BE IN PLACE PRIOR TO SURVEY.

4) SITE INSTALLATION:
CONTRACTOR SHALL REPORT ANY AND ALL FIELD DISCREPANCIES TO MANUFACTURER FOR RESOLUTION. CONTRACTOR IS RESPONSIBLE FOR PROPER HANDLING AND STORAGE OF MATERIALS TO AVOID DAMAGE TO COMPONENTS. TEMPORARY BRACING OR SUPPORT, WHERE REQUIRED, IS THE RESPONSIBILITY OF THE INSTALLATION CONTRACTOR.

SYMBOLS:

- (1) PANEL IDENTIFICATION NUMBER FOR REGULAR DECK SLATS
- (1H) PANEL IDENTIFICATION NUMBER FOR HOLLOW DECK SLATS
- DECK PENETRATION KIT, SEE DETAIL AS NOTED
- (BEAM 1) BEAM IDENTIFICATION NUMBER
- (A) ANCHOR LOCATION IDENTIFICATION

SHEET INDEX

SHEET #	DESCRIPTION
1	LAYOUT, SYMBOLS AND NOTES
2	MBR COVER LAYOUT PLAN VIEW
3	BEAM LENGTH, SECTIONS & DETAILS
4	SECTIONS & DETAILS

FIELD TESTING REQUIREMENTS

TYPE	REQ.	DATA	RESPONSIBILITY	SPEC.
LOAD	NO	N.A.	N.A.	N.A.
SMOKE	NO	N.A.	N.A.	N.A.
AIR	NO	N.A.	N.A.	N.A.

PROJECT LAYOUT
SCALE: 1/2" = 1'-0"

CONFIDENTIAL TECHNICAL DOCUMENT

THE INFORMATION CONTAINED IN THIS DOCUMENT IS CONFIDENTIAL AND CONTAINS TRADE SECRETS AND/OR INFORMATION THAT IS THE PROPERTY OF HALLSTEN CORPORATION, HEREAFTER "HALLSTEN". ANY DISCLOSURE, COPYING, DISTRIBUTION, OR PUBLICATION OF THE INFORMATION CONTAINED HEREIN, BY ANY PERSON OR ENTITY, INCLUDING REPRESENTATIVES OR AGENTS OF HALLSTEN, UNLESS SPECIFICALLY AUTHORIZED IN WRITING, IS PROHIBITED. THE PRODUCT DEPICTED ABOVE IS COVERED BY ONE OR MORE OF THE FOLLOWING U.S. PATENTS AND/OR OTHER FOREIGN OR DOMESTIC PATENTS PENDING: 5,050,361, 5,325,646, 5,454,195, 5,526,620, 5,545,358, 5,617,677, 5,689,920, 5,845,594, 5,911,662, 5,941,027, 6,012,259, 6,151,835, 6,255,102, 6,802,157, 7,422,895, 7,713,732 AND 8,136,312

PROJECT INFO

0 1/2 1
DRAWING NOT TO SCALE IF BAR IS NOT 1"

3	21 MAY 20	BL	
2	27 NOV 19	BL	
1	18 SEP 19	BL	

REVISIONS

Date: 6 SEP 19
Manager: R. KUEHNE
Drawn By: B. LAMBERT
Sheet: 1 of 4
Dwg. No.: 12015

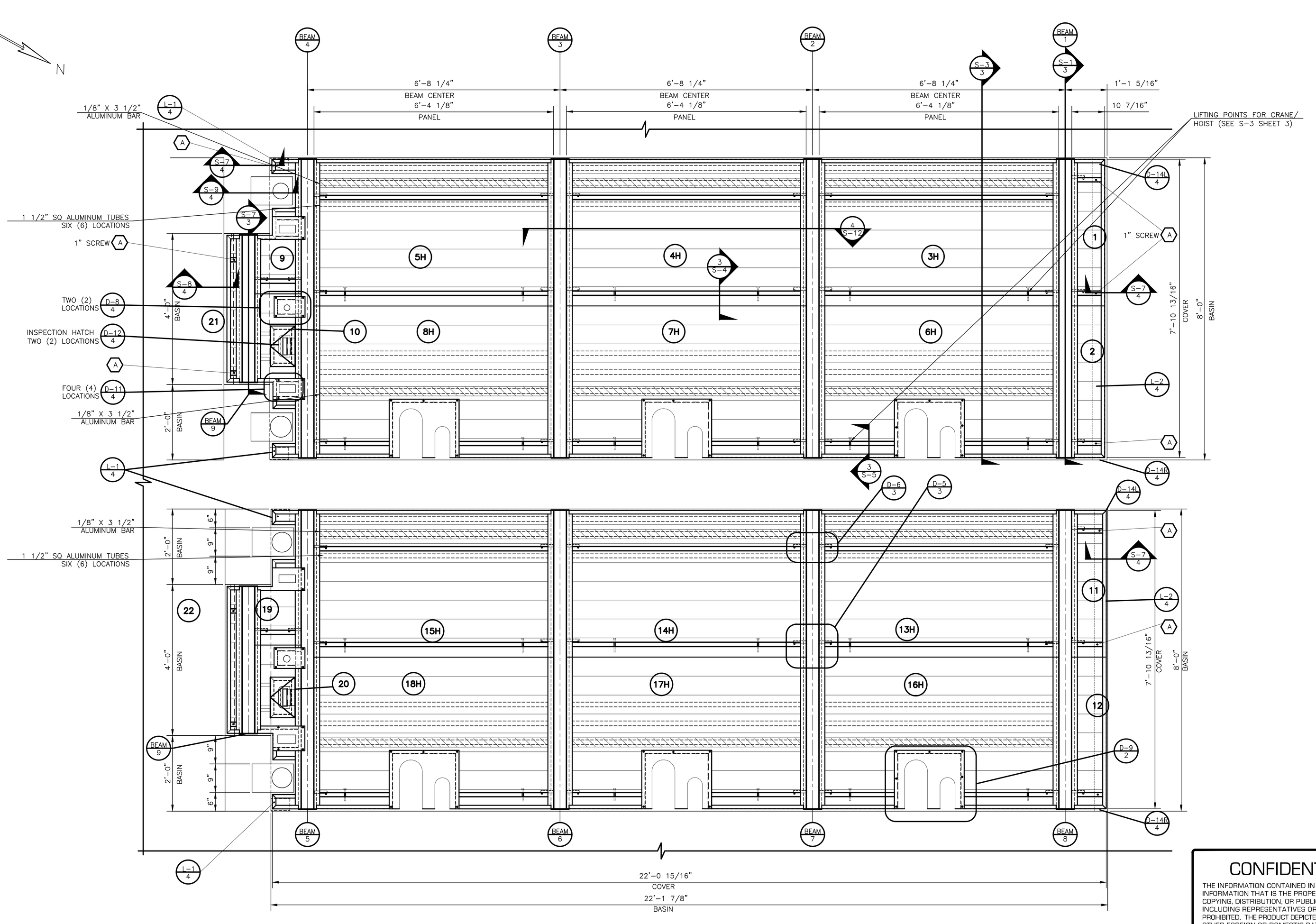

MBR COVERS PLAN VIEW

SCALE: 3/4" = 1'-0"

CONFIDENTIAL TECHNICAL DOCUMENT

THE INFORMATION CONTAINED IN THIS DOCUMENT IS CONFIDENTIAL AND CONTAINS TRADE SECRETS AND/OR INFORMATION THAT IS THE PROPERTY OF HALLSTEN CORPORATION, HEREAFTER "HALLSTEN". ANY DISCLOSURE, COPYING, DISTRIBUTION, OR PUBLICATION OF THE INFORMATION CONTAINED HEREIN, BY ANY PERSON OR ENTITY, INCLUDING REPRESENTATIVES OR AGENTS OF HALLSTEN, UNLESS SPECIFICALLY AUTHORIZED IN WRITING, IS PROHIBITED. THE PRODUCT DEPICTED ABOVE IS COVERED BY ONE OR MORE OF THE FOLLOWING U.S. PATENTS AND/OR OTHER FOREIGN OR DOMESTIC PATENTS PENDING: 5,050,361, 5,325,646, 5,454,195, 5,526,620, 5,545,358, 5,617,677, 5,689,920, 5,845,594, 5,911,662, 5,941,027, 6,012,259, 6,151,835, 6,255,102, 6,802,157, 7,422,895, 7,713,732 AND 8,136,312

MBR COVERS PLAN VIEW

0 1/2 1

DRAWING NOT TO SCALE IF BAR IS NOT 1"

3	21 MAY 20	BL	
2	27 NOV 19	BL	
1	18 SEP 19	BL	
REVISIONS			

Date: 6 SEP 19

Manager: R. KUEHNE

Drawn By: B. LAMBERT

Sheet: 2 of 4

Dwg. No.: 12015

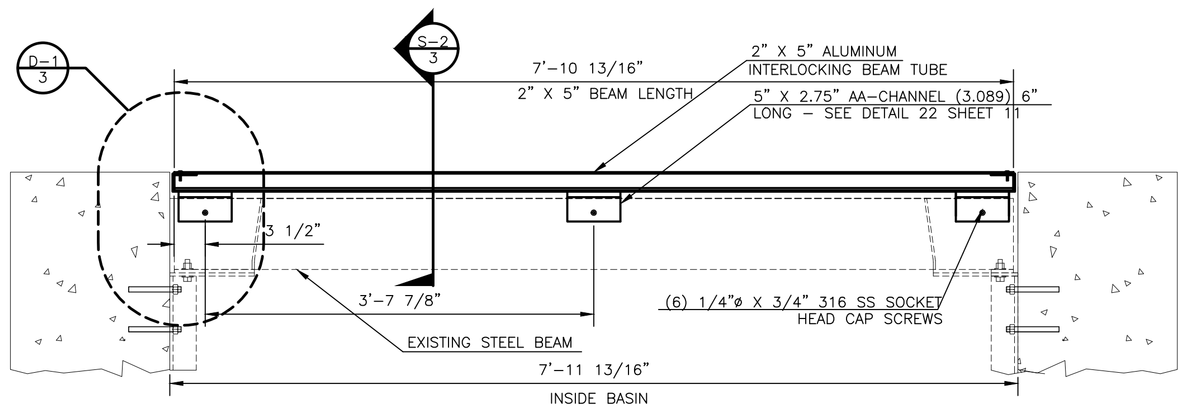

S-1 2 **BEAM # 1~8 SECTION VIEW**
SCALE: 1" = 1'-0"
MAKE (8) EIGHT

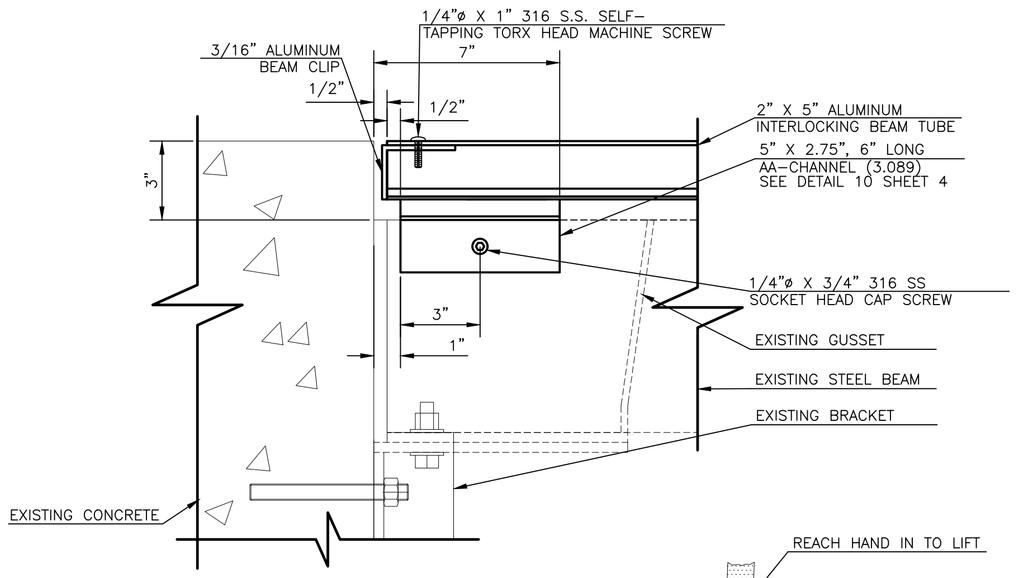

D-1 3 **BEAM END DETAIL VIEW**
SCALE: 3" = 1'-0"

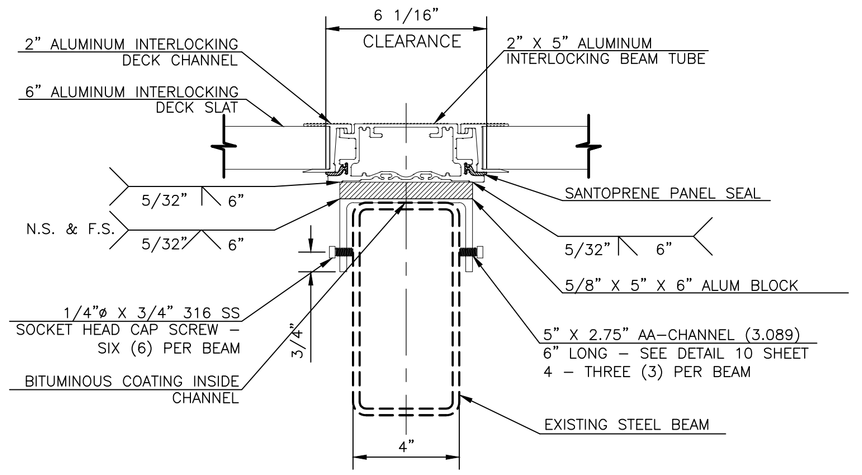

S-2 3 **BEAM SECTION VIEW**
SCALE: 3" = 1'-0"

TO ACCESS MBR UNIT BELOW COVER:
1. RELEASE LATCHED THE SIX (6) LATCHES
2. LIFT OFF PANEL "A"
3. LIFT OFF PANEL "B"

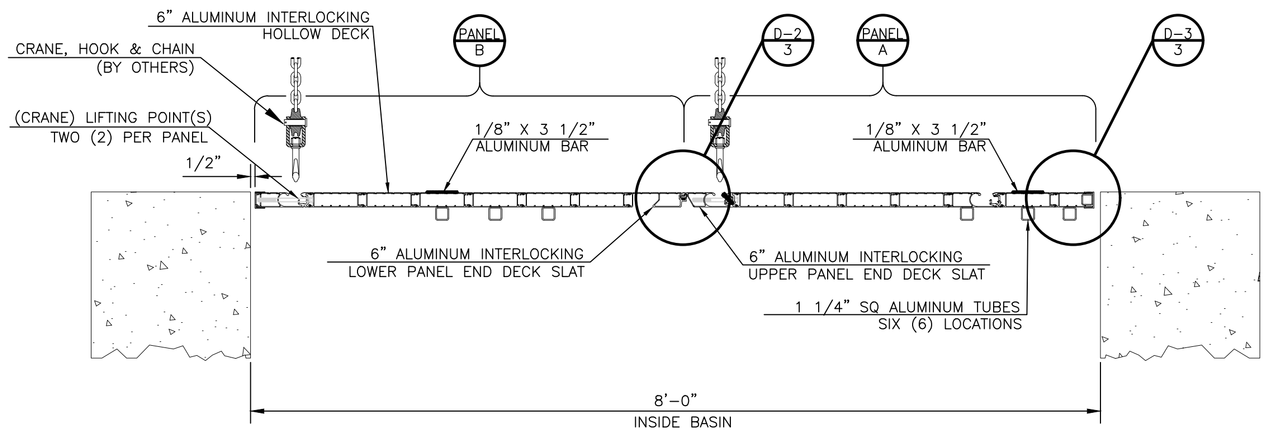

S-3 2 **COVER SECTION VIEW**
SCALE: 1" = 1'-0"

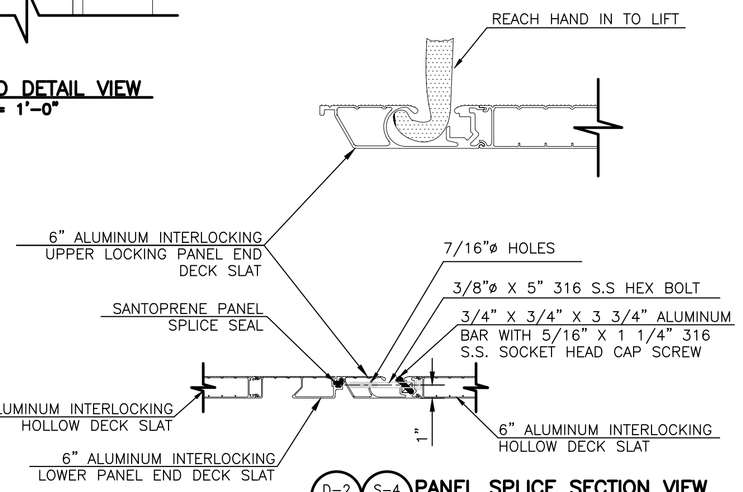

D-2 3 S-4 2 **PANEL SPLICE SECTION VIEW**
SCALE: 1 1/2" = 1'-0"

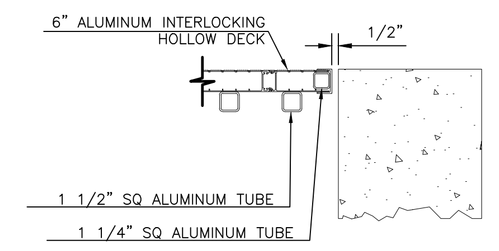

D-3 3 S-5 2,3 **COVER PANEL END LATCH SECTION VIEW**
SCALE: 1 1/2" = 1'-0"

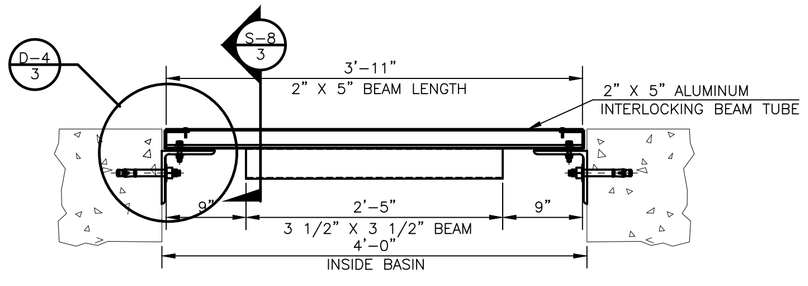

S-7 2 **BEAM # 9, 10 SECTION VIEW**
SCALE: 1" = 1'-0"
MAKE (2) TWO

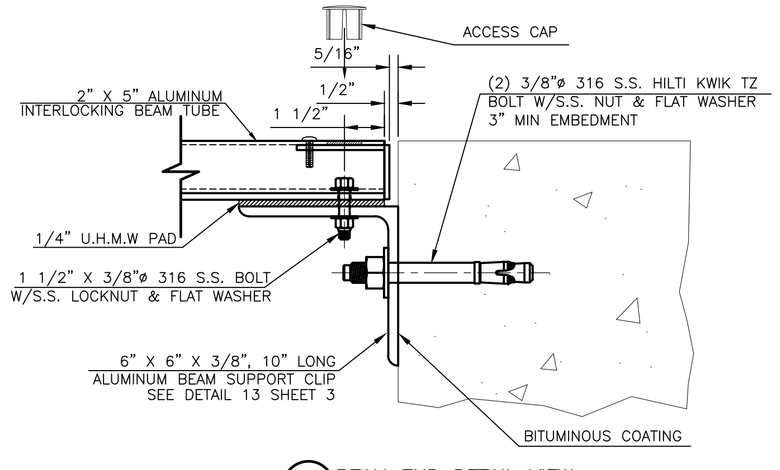

D-4 3 **BEAM END DETAIL VIEW**
SCALE: 3" = 1'-0"

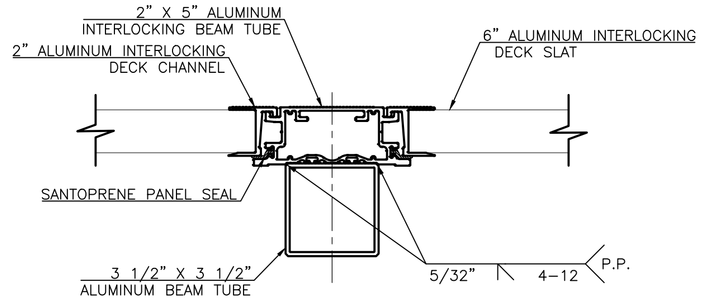

S-8 3 **BEAM SECTION**
SCALE: 3" = 1'-0"

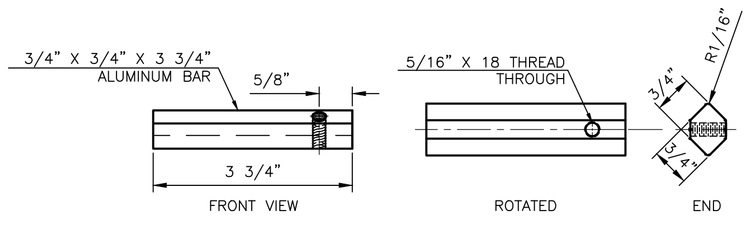

D-7 3 **PLAIN LATCH BAR DETAIL VIEW**
SCALE: 1/2" = 1"
MAKE: (54) FIFTY FOUR

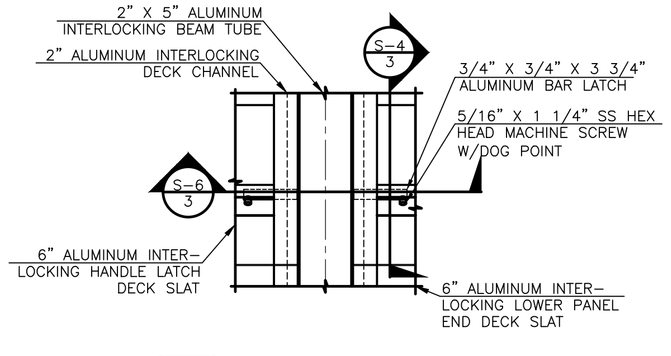

D-5 2 **PANEL SPLICE LATCH DETAIL VIEW**
SCALE: 1 1/2" = 1'-0"

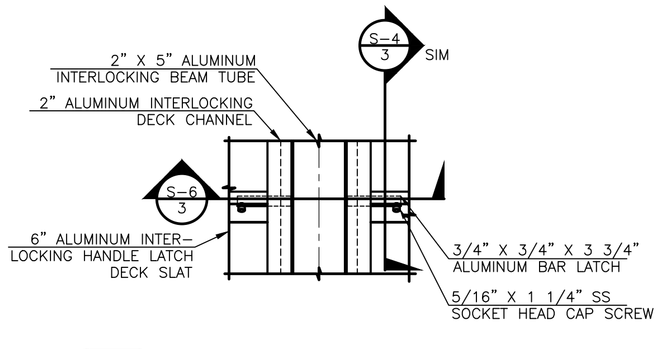

D-6 2 **PANEL END LATCH DETAIL VIEW**
SCALE: 1 1/2" = 1'-0"

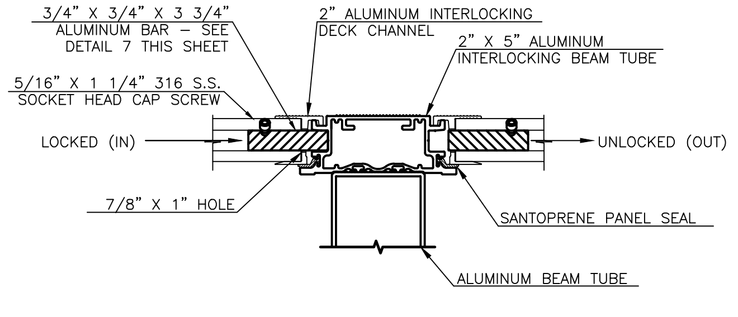

S-6 3 **TYPICAL LATCHES SECTION VIEW**
SCALE: 3" = 1'-0"

CONFIDENTIAL TECHNICAL DOCUMENT

THE INFORMATION CONTAINED IN THIS DOCUMENT IS CONFIDENTIAL AND CONTAINS TRADE SECRETS AND/OR INFORMATION THAT IS THE PROPERTY OF HALLSTEN CORPORATION, HEREAFTER "HALLSTEN". ANY DISCLOSURE, COPYING, DISTRIBUTION, OR PUBLICATION OF THE INFORMATION CONTAINED HEREIN, BY ANY PERSON OR ENTITY, INCLUDING REPRESENTATIVES OR AGENTS OF HALLSTEN, UNLESS SPECIFICALLY AUTHORIZED IN WRITING, IS PROHIBITED. THE PRODUCT DEPICTED ABOVE IS COVERED BY ONE OR MORE OF THE FOLLOWING U.S. PATENTS AND/OR OTHER FOREIGN OR DOMESTIC PATENTS PENDING: 5,050,361, 5,325,646, 5,454,195, 5,526,620, 5,545,358, 5,617,677, 5,689,920, 5,845,594, 5,911,662, 5,941,027, 6,012,259, 6,151,835, 6,255,102, 6,802,157, 7,422,895, 7,713,732 AND 8,136,312

BEAM LENGTH, SECTIONS & DETAILS

DRAWING NOT TO SCALE IF BAR IS NOT 1"

REVISIONS			
3	21 MAY 20	BL
2	27 NOV 19	BL
1	18 SEP 19	BL

Date: 6 SEP 19
Manager: R. KUEHNE
Drawn By: B. LAMBERT
Sheet: 3 of 4
Dwg. No.: 12015

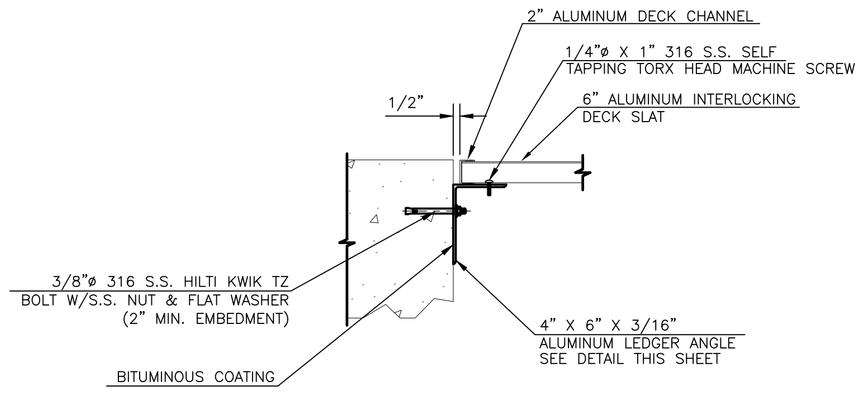

S-7 / 2 **PANEL EDGE SECTION VIEW**
SCALE: 1 1/2" = 1'-0"

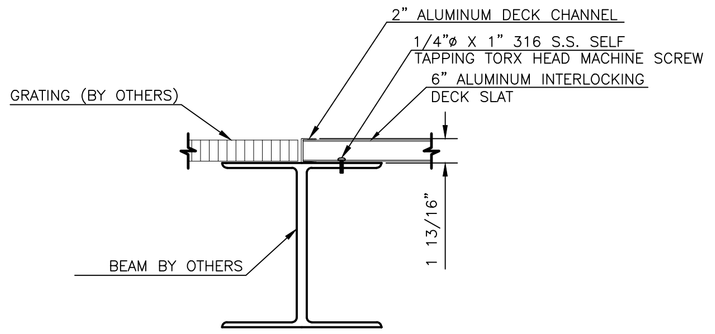

S-8 / 2 **DECK SECTION VIEW**
SCALE: 1 1/2" = 1'-0"

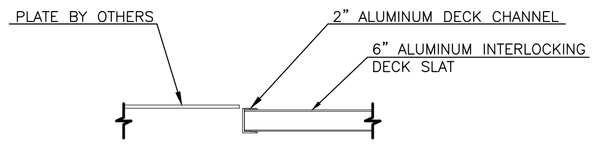

S-9 / 2 **DECK SECTION VIEW**
SCALE: 1 1/2" = 1'-0"

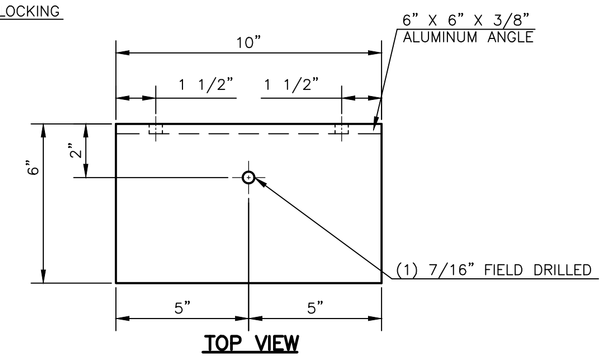

TOP VIEW

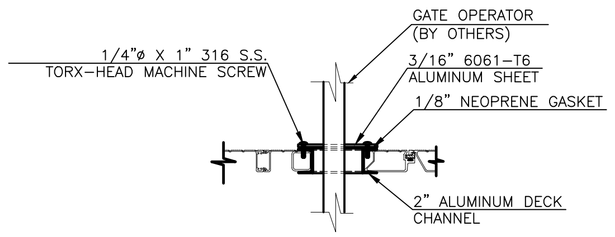

S-10 / 4 **PENETRATION KIT SECTION VIEW**
SCALE: 1 1/2" = 1'-0"

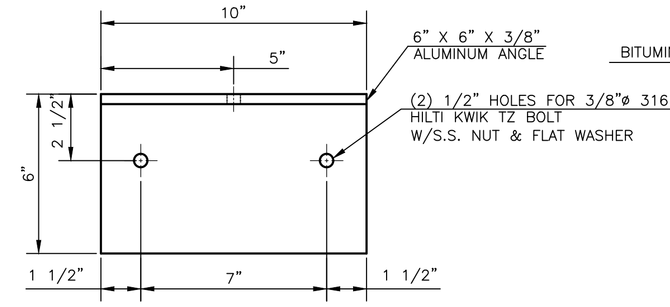

FRONT VIEW

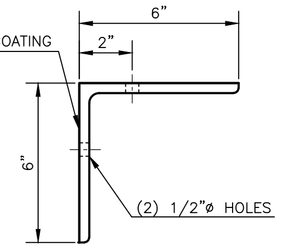

SIDE VIEW

D-13 / 3 **DETAIL: ALUMINUM BEAM SUPPORT CLIP C1**
SCALE: 3" = 1'-0"
MAKE (4) FOUR

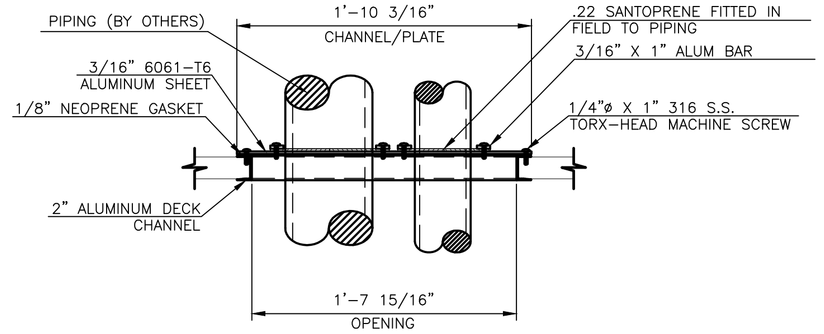

S-11 / 4 **PIPE PENETRATION KIT SECTION VIEW**
SCALE: 1 1/2" = 1'-0"

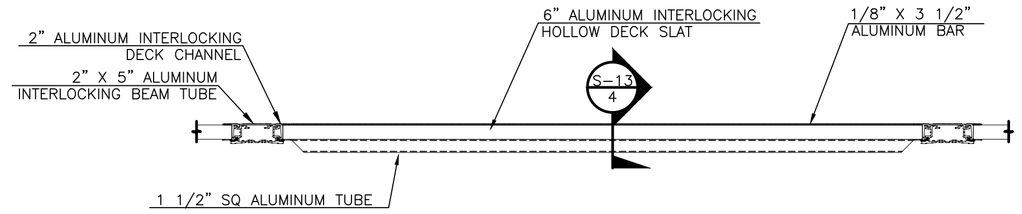

S-12 / 2 **COVER SECTION VIEW**
SCALE: 1" = 1'-0"

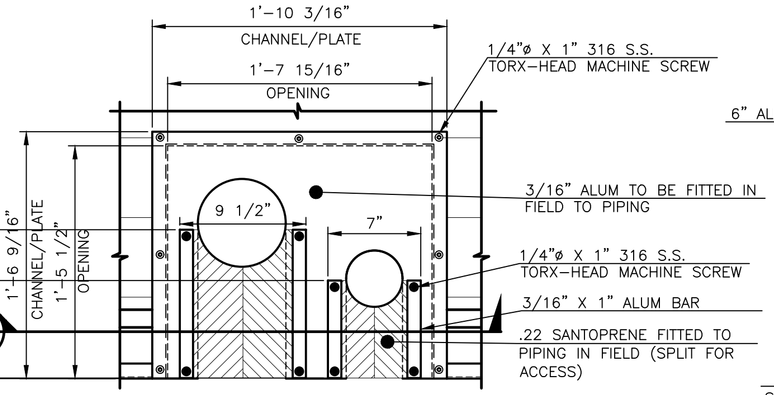

D-9 / 2 **PIPE PENETRATION KIT DETAIL VIEW**
SCALE: 1 1/2" = 1'-0"
MAKE (6) SIX
NOTE: SHOP INSTALLED

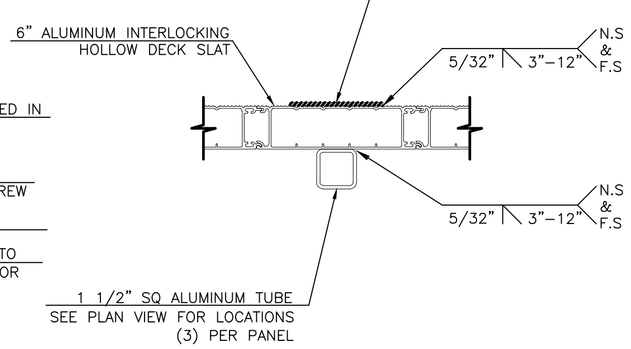

S-13 / 4 **COVER SECTION VIEW**
SCALE: 3" = 1'-0"

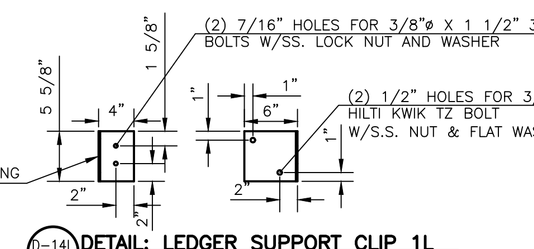

D-14L / 3 **DETAIL: LEDGER SUPPORT CLIP 1L**
SCALE: 1" = 1'-0"
MAKE (2) TWO

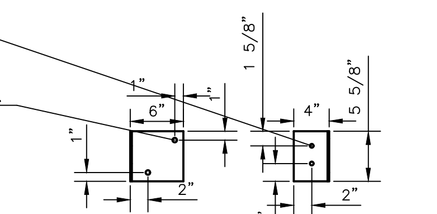

D-14R / 3 **DETAIL: LEDGER SUPPORT CLIP 1R**
SCALE: 1" = 1'-0"
MAKE (2) TWO

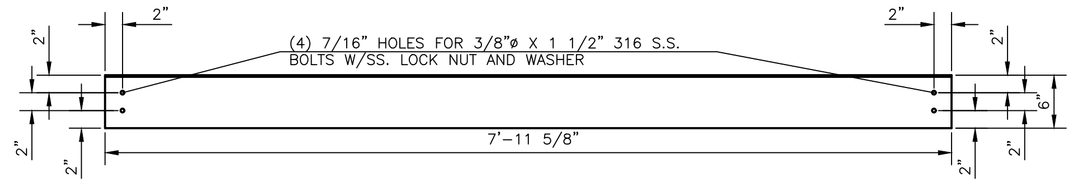

L2 **ALUMINUM LEDGER ANGLE**
SCALE: 1" = 1'-0"
MAKE: (2) TWO
NOTE: SEE SHEET 2 FOR LEDGER ANGLE LOCATIONS

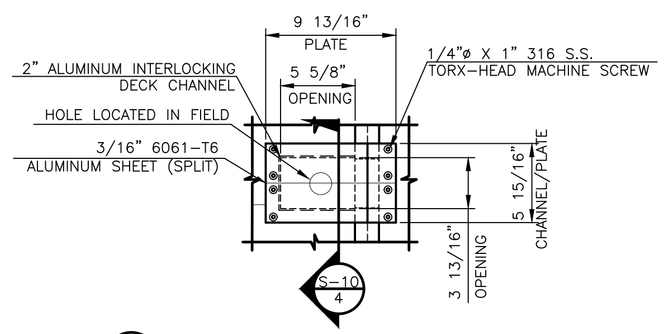

D-8 / 2 **GATE PENETRATION KIT DETAIL VIEW**
SCALE: 1 1/2" = 1'-0"
MAKE (2) TWO
NOTE: SHOP INSTALLED

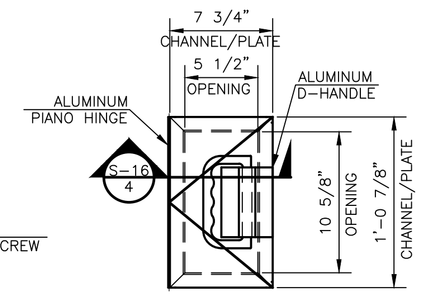

D-12 / 2 **PIANO HINGE INSPECTION HATCH DETAIL VIEW**
SCALE: 1 1/2" = 1'-0"
MAKE (2) TWO
NOTE: SHOP INSTALLED

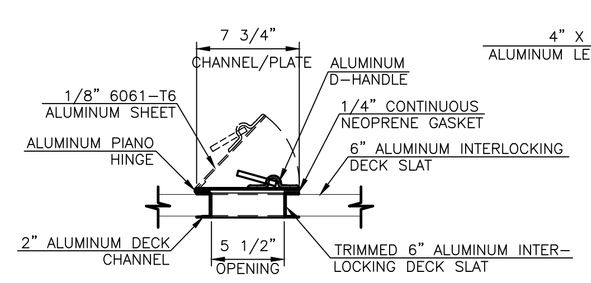

S-16 / 4 **PIANO HINGE INSPECTION HATCH SECTION VIEW**
SCALE: 1 1/2" = 1'-0"

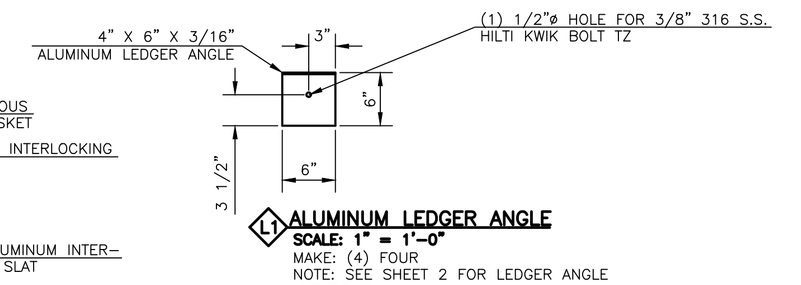

L1 **ALUMINUM LEDGER ANGLE**
SCALE: 1" = 1'-0"
MAKE: (4) FOUR
NOTE: SEE SHEET 2 FOR LEDGER ANGLE LOCATIONS

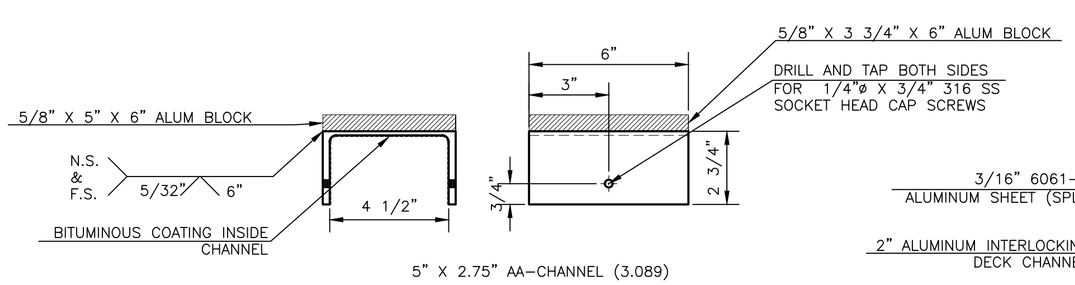

D-10 / 3 **BEAM AA-CHANNEL DETAIL VIEW**
SCALE: 1 1/2" = 1'-0"
MAKE (24) TWENTY FOUR

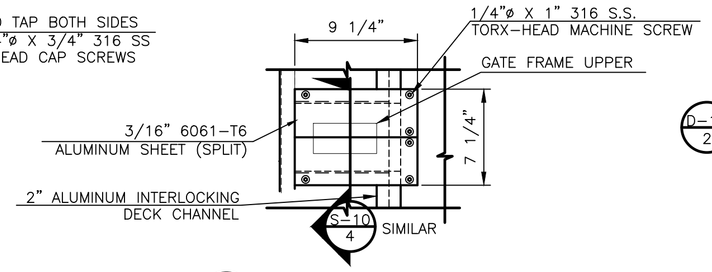

D-11 / 2 **GATE FRAME PENETRATION KIT DETAIL VIEW**
SCALE: 1 1/2" = 1'-0"
MAKE (4) FOUR
NOTE: SHOP INSTALLED

CONFIDENTIAL TECHNICAL DOCUMENT

THE INFORMATION CONTAINED IN THIS DOCUMENT IS CONFIDENTIAL AND CONTAINS TRADE SECRETS AND/OR INFORMATION THAT IS THE PROPERTY OF HALLSTEN CORPORATION, HEREAFTER "HALLSTEN". ANY DISCLOSURE, COPYING, DISTRIBUTION, OR PUBLICATION OF THE INFORMATION CONTAINED HEREIN, BY ANY PERSON OR ENTITY, INCLUDING REPRESENTATIVES OR AGENTS OF HALLSTEN, UNLESS SPECIFICALLY AUTHORIZED IN WRITING, IS PROHIBITED. THE PRODUCT DEPICTED ABOVE IS COVERED BY ONE OR MORE OF THE FOLLOWING U.S. PATENTS AND/OR OTHER FOREIGN OR DOMESTIC PATENTS PENDING: 5,050,361, 5,325,646, 5,454,195, 5,526,620, 5,545,358, 5,617,677, 5,689,920, 5,845,594, 5,911,662, 5,941,027, 6,012,259, 6,151,835, 6,255,102, 6,802,157, 7,422,895, 7,713,732 AND 8,136,312

SECTIONS & DETAILS

0 1/2 1
DRAWING NOT TO SCALE IF BAR IS NOT 1"

3	21 MAY 20	BL
2	27 NOV 19	BL
1	18 SEP 19	BL
REVISIONS		

Date: 6 SEP 19
Manager: R. KUEHNE
Drawn By: B. LAMBERT
Sheet: 4 of 4
Dwg. No.: 12015

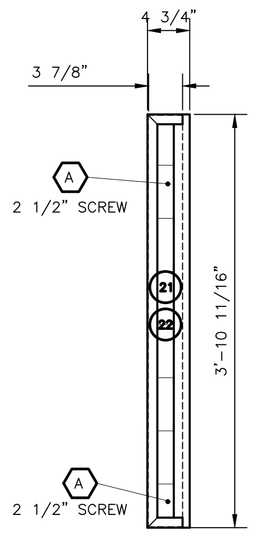

PANELS 21, 22 PLAN VIEW
SCALE: 1" = 1'-0"
MAKE: (2) TWO

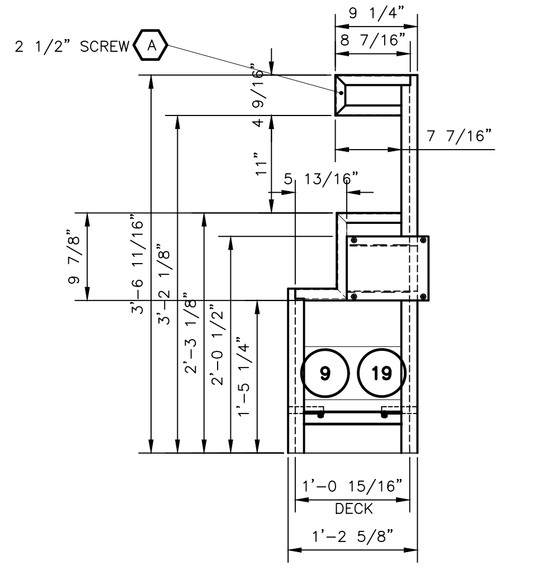

PANELS 9, 19 PLAN VIEW
SCALE: 1" = 1'-0"
MAKE: (2) TWO

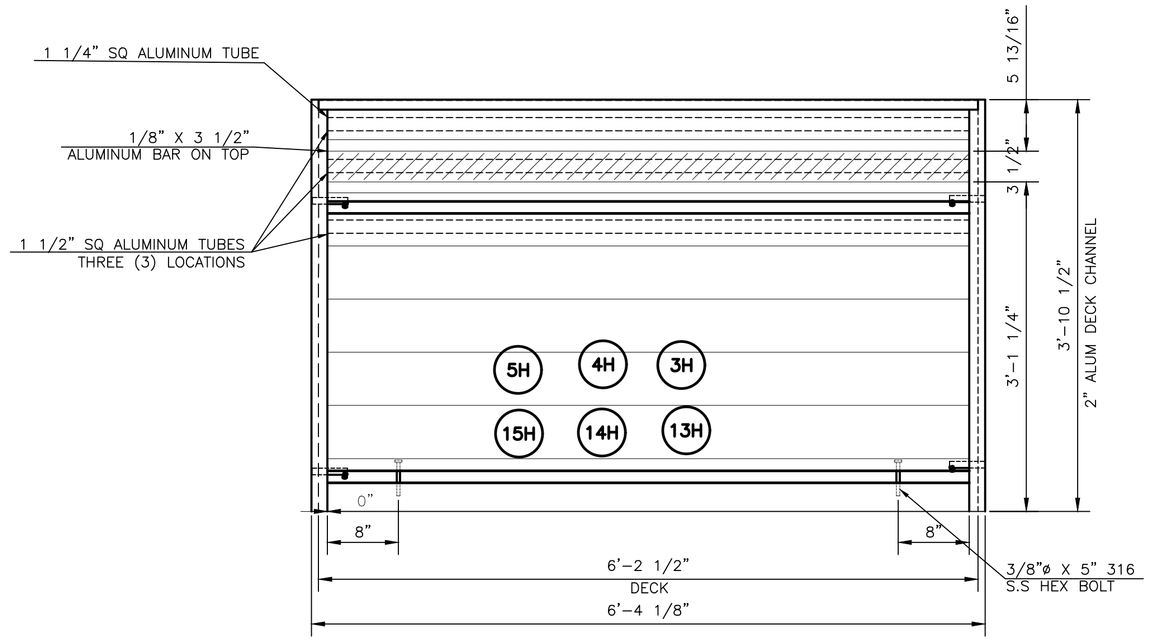

PANELS 5H, 4,H, 3H, 13H, 14H, 15H PLAN VIEW
SCALE: 1" = 1'-0"
MAKE: (6) SIX

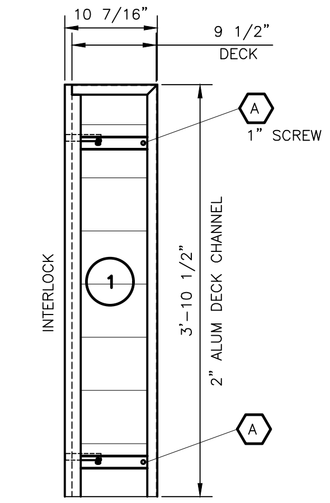

PANELS 1 PLAN VIEW
SCALE: 1" = 1'-0"
MAKE: (1) ONE

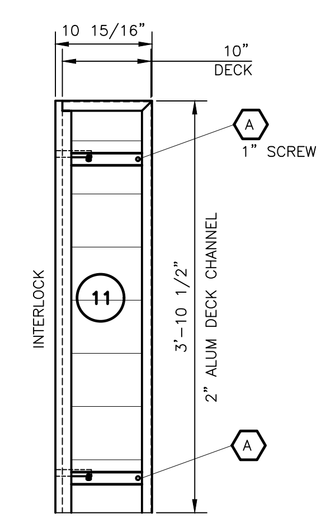

PANELS 11 PLAN VIEW
SCALE: 1" = 1'-0"
MAKE: (1) ONE

PANELS 10, 20 PLAN VIEW
SCALE: 1" = 1'-0"
MAKE: (2) TWO

PANELS 6H, 7H, 8H, 16H, 17H, 18H PLAN VIEW
SCALE: 1" = 1'-0"
MAKE: (6) SIX

PANELS 2 PLAN VIEW
SCALE: 1" = 1'-0"
MAKE: (1) ONE

PANELS 12 PLAN VIEW
SCALE: 1" = 1'-0"
MAKE: (1) ONE

CONFIDENTIAL TECHNICAL DOCUMENT

THE INFORMATION CONTAINED IN THIS DOCUMENT IS CONFIDENTIAL AND CONTAINS TRADE SECRETS AND/OR INFORMATION THAT IS THE PROPERTY OF HALLSTEN CORPORATION, HEREAFTER "HALLSTEN". ANY DISCLOSURE, COPYING, DISTRIBUTION, OR PUBLICATION OF THE INFORMATION CONTAINED HEREIN, BY ANY PERSON OR ENTITY, INCLUDING REPRESENTATIVES OR AGENTS OF HALLSTEN, UNLESS SPECIFICALLY AUTHORIZED IN WRITING, IS PROHIBITED. THE PRODUCT DEPICTED ABOVE IS COVERED BY ONE OR MORE OF THE FOLLOWING U.S. PATENTS AND/OR OTHER FOREIGN OR DOMESTIC PATENTS PENDING: 5,050,361, 5,325,646, 5,454,195, 5,526,620, 5,545,358, 5,617,677, 5,689,920, 5,845,594, 5,911,662, 5,941,027, 6,012,259, 6,151,835, 6,255,102, 6,802,157, 7,422,895, 7,713,732 AND 8,136,312

PROJECT INFO

0 1/2 1
DRAWING NOT TO SCALE
IF BAR IS NOT 1"

3	21 MAY 20	BL
2	27 NOV 19	BL
1	18 SEP 19	BL
REVISIONS		

Date: 6 SEP 19
Manager: R. KUEHNE
Drawn By: B. LAMBERT
Sheet: 2A of 4
Dwg. No.: 12015

PLUMMER

Potential Change Order (PCO) Request

PROJECT NO: 1422-005-02

PROJECT: South Wastewater Treatment Plant - MBR

OWNER: City of Sherman

CONTRACTOR: Kiewit Construction South

ENGINEER: Plummer Associates, Inc.

PCO NO.: 07

DESCRIPTION:

NOTIFICATION BY CONTRACTOR

The Contractor proposes to make the additions, modifications, or deletions to the Work described in the Contract Documents, as shown in Attachment "A" and requests that you take the following action:

- ☐ Notify us that you concur that this change does not require a change in Contract time or amount and issue a Field Order.
- ☒ Issue a Change Order for performing the described change. Change in Contract amount is indicated in the attached detailed cost breakdown of labor, materials, equipment and all other costs associated with this change. Impacts on Contract Time are shown in the attached revised schedule.
- ☐ Authorize the Contractor to proceed with the described change. Payment will be requested at the unit price bid.
- ☐ Authorize the Contractor to proceed with the change under the time and materials provisions of the Contract.

By: Kory Kyllo Date: 3/29/2024

ENGINEER'S RESPONSE

We respond to your request as follows:

- ☐ We concur that this is a no cost or time change. See attached/forthcoming Field Order No. / comments.
- ☒ Your proposal is recommended to the Owner. See attached/forthcoming proposed Change Order.
- ☐ Proceed with the change at the unit price bid.
- ☐ Proceed with the change under the time and materials provisions of the Contract.
- ☐ Additional information is required to evaluate this request. Provide information as described in the attached comments and resubmit.
- ☐ Potential Change Order Request is not accepted.

Construction Manager: Brian Beach, PE CCM Date: 4/3/2024

Engineer: Date: 4-3-2024

Program Manager: Date: 4/4/24

Owner: Digitally signed by Tom Pruitt Date: 2024.04.04 11:20:39-05'00' Date: 4/4/2024

POTENTIAL CHANGE ORDER

Kiewit

Date: March 26, 2024	Potential Change Order #: PCO-0007	Revision #: 0
To: City of Sherman (COS) 220 W. Mulberry Street Sherman, TX 75090	Contract #: 1513-U Construction Manager at Risk (CMAR)	Project: South WWTP - MBR

Drawing, Specification, Equipment Number or Other Reference: WCD 011 Submersible Pump Discharge Elbow Upside

Description of the Proposed Change Order Work: Submersible Pump Discharge Elbow Upside

CMAR received WCD 011. CMAR is providing this PCO along with the Basis of Estimate and attachments in accordance with General Conditions 1.01 A. 51., 10.01 A. and B., and 10.03 A.

These changes have increased the lead time for this material delivery by approximately four weeks. Impacts on installation have not been evaluated and are not included.

The CMAR support services are T&M per Amendment 1 and are not included in this PCO.

This additional scope results in an addition for GMP C – Equipment Package 3.

Construction				**Estimated Effect on Contract Price**
Lump Sum ($)	Contingency 9% ($)	Additional GCs (12.2% When>$155m)	Fee 9.95% ($)	Change Impact ($)
$143,223.00	$12,890.07	$19,045.79	$17,428.31	**$192,587.17**

Detailed components of above categories must accompany this estimate (discipline, craft, commodity of material, etc.)

Estimated Effect on Project Schedule (calendar days)		**Estimated Effect on Contract Terms**
Substantial Completion	N/A	N/A
Final Completion	N/A	N/A

Recommended by: Kiewit Water Facilities South Co.

Project Manager: _____ 3/29/2024
Contractor — Date

Recommended by: Design Engineer

Name _____ Date _____

Approved by: Program Manager

Name _____ Date _____

Recommended by: Program Construction Manager

Name _____ Date _____

Approved by: City of Sherman

Name _____ Date _____

Approval Signatures are on the PCO cover sheet from Plummer

Basis of Estimate: Submersible Pump Discharge Elbow Upsize

Summary

1. Influent Pump Station	**Total**	**$76,278.00**
1. Added Items		$88,289.00
2. Credited Items		-$12,011.00
2. RAS Pump Station	**Total**	**$85,710.00**
1. Added Items		$103,809.00
2. Credited Items		-$18,099.00
3. Additional Freight	**Total**	**$10,050.00**
	Sub Total	**$172,038.00**
	Discount (15%)	**-$28,815.00**
	Grand Total	**$143,223.00**

1. Influent Pump Station

Total	$76,278.00

The Work Change Directives make the following additions, modifications, or deletions to the Work described in the Contract Documents:

- Add two (2) 20”x20” base elbows
- Add two (2) 12”x20” discharge adapters
- Add two (2) 12”x12” base elbows
- Add two (2) 8”x12” discharge adapters
- Remove two (2) 12”x12” base elbows
- Remove two (2) 8”x8” base elbows.

Additional information: Lead time on 20x20 Base Elbows: 20-24 weeks

2. Influent Pump Station

Total	$85,710.00

The Work Change Directives make the following additions, modifications, or deletions to the Work described in the Contract Documents:

- Add (3) 20”x20” base elbows
- Add three (3) 12”x20” discharge adapters
- Remove three (3) 12”x12” base elbows
- Reduce the rating of three (3) RAS pumps from 47 HP to 33.5 HP.
- Based on the wetwell depth of 20’ for the RAS station, intermediate brackets are not needed,

Additional information: Lead time on 20x20 Base Elbows: 20-24 weeks

KIEWIT WATER FACILITIES SOUTH CO.
2050 Roanoke Rd, Westlake, TX 76262

3. **Additional Freight**

Total	$10,050.00

Increase in Freight from supplier.

Attachments

1. COSK CHGM Work Change Directive 0011
2. GPS Change Order Quote - Sherman South WWTP MBR PACKAGE 1
3. Global Pump Solutions Discount

KIEWIT WATER FACILITIES SOUTH CO.
2050 Roanoke Rd, Westlake, TX 76262

Project:	South Wastewater Treatment Plant - MBR	**Project Number:**	
Owner:	Greater Texoma Utility Authority/City of Sherman	1513-U	
Contractor:	Kiewit Water Facilities South Co.	105718	
Engineer:	Plummer Associates	1422-005-02	

Work Change Directive No.: 11 **Description:** Submersible Pump Discharge Elbow upsize

Specification: 43 25 00-PS

Drawing No.: multiple **Detail Description:** Provide upsized discharge elbow and adapter plate for 7 pumps

Make the following additions, modifications, or deletions to the Work described in the Contract Documents:

Provide two (2) 20”x20” base elbows, two (2) 12”x20” discharge adapters, two (2) 12”x12” base elbows, and two (2) 8”x12” discharge adapters at the influent pump station and, remove two (2) 12”x12” base elbows and two (2) 8”x8” base elbows at the influent pump station. Provide 3 20”x20” base elbows and three (3) 12”x20” discharge adapters at the RAS pump station, and remove three (3) 12”x12” base elbows at the RAS pump station. Reduce rating of three (3) RAS pumps from 47 HP to 33.5 HP. These changes are included as the recommendations in the attached letter from the engineer. Drawings M-213, M-214, and M-602 are intended to be updated and provided as IFC drawings in a separate Work Change Directive.

Purpose of Work Change Directive:

With this change, the pump stations can remain in service during future pump upgrades.

The Owner directs the Contractor to proceed with Work described in this Work Change Directive. Compensation for this Work will be determined using the methods described below. Costs for the Work Change Directive may not exceed the total authorized compensation shown for this Work Change Directive shown below without authorization of the Owner by other Work Change Directives or by Change Order. Contractor is to submit a Change Proposal when impacts on Contract Price and Contract Times can be determined. A Change Order or Contract Amendment is to be issued to incorporate changes in Contract Price and / or Contract Times.

Basis of Compensation:

☐ Unit Prices

☒ Lump Sum calculated using Cost of Work provisions in General Conditions Paragraph 12.01

☐ Time and Materials using Cost of Work provisions in General Conditions Paragraph 12.01

☐ Allowance based on provisions in General Conditions Paragraph 11.02.

Required Documentation:

☒ Detailed cost breakdown attached showing labor, materials, equipment and all other costs for this change

☒ Schedule attached to show impacts and justification for requested change in Contract Times if applicable

Project:	South Wastewater Treatment Plant - MBR	**Project Number:**	
Owner:	Greater Texoma Utility Authority/City of Sherman	1513-U	
Contractor:	Kiewit Water Facilities South Co.	105718	
Engineer:	Plummer Associates	1422-005-02	

Compensation for this Work Change Directive may not exceed: $ N/A

Recommended by: Design Engineer

Name: [signature] Date: 3/14/2024

Recommended by: Project Construction Manager

Name: Ben Boord Date: 3/14/24

Approved by: Kiewit Water Facilities South Co.

Kory.Kyllo Digitally signed by Kory.Kyllo DN: CN=Kory.Kyllo, OU=Employees, OU=Users, OU=Kiewit, DC=KIEWITPLAZA, DC=com Date: 2024.03.20 14:14:23-05'00'

Name Date

Approved by: Program Manager

Name: [signature] Date: 3/15/24

Approved by: Greater Texoma Utility Authority

[signature] Digitally signed by Paul Sigle DN: O=GTUA, CN=Paul Sigle, E=paul@gtua.org Reason: I am the author of this document Location: Date: 2024.03.15 09:32:49-05'00' Foxit PDF Editor Version: 2023.2.0

Name 3/15/2024 Date

Approved by: City of Sherman

[signature] Digitally signed by Tom Pruitt Date: 2024.03.15 08:58:25-05'00'

Name Date

1422-005-02

3/11/2024

Tom Pruitt, P.E.
Utility Engineer
City of Sherman
City Hall 220 W. Mulberry St.
Sherman, TX 75090

Re: City of Sherman
Public Works #1513-U
South Wastewater Treatment Plant – MBR Project
Global Pump Solutions Submersible Pump Discharge Elbow Change

Dear Mr. Pruitt:

The Influent Pump Station (IPS) and Return Activated Sludge Pump Station (RAS PS) submersible pumps were preselected in Equipment Package 3. The selected manufacturer for these pumps was Sulzer, which is represented by Global Pump Solutions (GPS). The original bid price included discharge elbows for each pump (four at the IPS and three at the RAS PS) that would need to be replaced when the IPS and RAS PS submersible pumps are upsized in the future. Replacing the discharge elbows would require taking the IPS partially offline and the RAS PS fully offline.

The design team engaged GPS and the CMAR to amend the scope of supply to furnish discharge elbows suitable for the future pumps. The cost breakdown is included in Table 1 on page 2 of this letter.

Plummer recommends that the cost increase of $192,587.17 be approved for several reasons. The IPS could have one wet well compartment taken offline at a time to complete the pump replacement process. However, the flows to the plant at the time of the pump replacement will be approaching the capacity of one wet well compartment. Bypass pumping may be required if influent flows exceed the storage volume available at the Emergency Storage Basins. Additional fittings would also be needed if the larger elbow installation is deferred. Two 45° bends on each pump discharge (8 total) would be required to avoid having the discharge piping conflict with the pump guide rails if the smaller elbows were kept in the scope of supply. These fittings were not included in the scope of the Process Mechanical bid package (BP08-001) and would be a cost increase. The RAS PS cannot be taken offline while the MBR plant is in operation. If the discharge elbows were not upsized, bypass pumping would be required, which could be up to 16 MGD to 20 MGD.

It is recommended that all seven submersible pump discharge elbows be upsized for the future pumps in this project to facilitate easier replacement of pumps in the future, eliminate the need for bypass pumping, and eliminate the need for additional fittings on the IPS pump discharge piping.

1320 S. University Drive, Suite 300
Fort Worth, Texas 76107
Phone 817.806.1700
Plummer.com
TBPE Firm No. 13

Table 1: GPS Submersible Pump Discharge Elbow Cost Breakdown

Description	Cost
Influent Pump Station	
Added Items	$88,289.00
Credited Items	-$12,011.00
Influent Pump Station Subtotal	$76,278.00
RAS Pump Station	
Added Items	$103,809.00
Credited Items	-$18,099.00
RAS Pump Station Subtotal	$85,710.00
Additional Freight	
Additional Freight Subtotal	$10,050.00
Subtotal	$172,038.00
Discount	-$28,815.00
Subtotal	**$143,223.00**
CMAR Fees	
General Conditions (12.2%)	$19,045.79
Contingency (9%)	$12,890.07
CMAR Fee (9.95%)	$17,428.31
CMAR Fees Subtotal	**$49,364.17**
Total	**$192,587.17**

If you have any questions concerning this recommendation, please contact me at 972-996-5720. We look forward to continuing working with you during the design and construction of this important project.

Sincerely,

PLUMMER ASSOCIATES, INC.

Quentin Geile

Quentin M. Geile, P.E.
Project Engineer

QMG/bkz

1320 S. University Drive, Suite 300
Fort Worth, Texas 76107
Phone 817.806.1700
Plummer.com
TBPE Firm No. 13

cc: Nathan Whiddon, City of Sherman, nathanw@cityofsherman.com
Ron Mick, Plus Six Engineering, ron.mick@plussixengineering.com
Freddy Mena, Mead & Hunt, Freddy.Mena@meadhunt.com
BK Zaveri, Mead & Hunt, BK.Zaveri@meadhunt.com
Alan Davis, Plummer, adavis@plummer.com
Sherri van der Wege, Plummer, svanderwege@plummer.com
Brian Beach, Plummer, bbeach@plummer.com
Colin Bunker, Kiewit, colin.bunker@kiewit.com

1320 S. University Drive, Suite 300
Fort Worth, Texas 76107
Phone 817.806.1700
Plummer.com
TBPE Firm No. 13

Global Pump Solutions LLC
WWW.GLOBALPUMPSOLUTIONS.NET
4541 JD Mouser Pkwy
Alvarado, TX 76009
972-449-5770

From: Charles Norman
Cell Phone: 817-781-5858
E-mail direct: Charles@gpspumps.com
Document: Sherman South WWTP
Date: 1/30/24

Section 43 23 00-PS Pumps, Submersible Centrifugal

Influent Station Larger Pumps (5,600 gpm per pump):

Two (2) 20" x 20" Base Elbows: **$49,155.00 TOTAL**
- Credit for originally quoted 12" x 12" base elbows: **$8,207.00 TOTAL**

Two (2) 12" x 20" Discharge Adapter: **$16,725.00 TOTAL**

Influent Station Smaller Pumps (2,800 gpm per pump):

Two (2) 12" X 12" Base Elbows: **$8,009.00 TOTAL**
- Credit for originally quoted 8" x 8" base elbows: **$3,804.00 TOTAL**

Two (2) 8" x 12" Discharge Adapter: **$14,400.00 TOTAL**

RAS Pumps:

Three (3) Sulzer ABS Pump, ~~47HP~~, 460volt, 3 Phase, explosion proof, electric submersible motors with 50' power cable, and 20' SS Lifting Chain
- Credit for go from 47HP to 33.5HP pumps (same pump model): **$4,782.00 TOTAL**

Three (3) 20" x 20" Base Elbows: **$74,540.00 TOTAL**
- Credit for originally quoted 12" x 12" base elbows: **$12,342.00 TOTAL**

Three (3) 12" x 20" Discharge Adapter: **$29,269.00 TOTAL**

~~Three (3) Intermediate Guide Bar Brackets~~
- Credit for originally quoted intermediate guide rail brackets: **$975.00 TOTAL**

CLARIFICATIONS
- Based on the wetwell depth of 20' for the RAS station, intermediate brackets are not needed, so that is why there is a credit offering for this

TOTAL PRICE FOR ALL ADDERS ABOVE: $192,098.00
FREIGHT ADDER: $10,050.00
TOTAL DEDUCT FOR ALL CREDITS ABOVE: $30,110.00
FINAL TOTAL CHANGE ORDER PRICE ADDER: $172,038.00 inc freight to jobsite

Lead time on 20x20 Base Elbows: 20-24 weeks

1. No piping, valves, fittings, kellum grips, or any other equipment not specifically listed above will be included
2. The price quoted is F.O.B. Jobsite
3. Federal taxes, state taxes, or local taxes are NOT included

Thank you,

Global Pump Solutions LLC
WWW.GLOBALPUMPSOLUTIONS.NET
4541 JD Mouser Pkwy
Alvarado, TX 76009
972-449-5770

Charles Norman

Charles Norman
Global Pump Solutions
Regional Sales Manager
(817) 781-5858 Cell

Charles.Wampler

From: Charles.Wampler
Sent: Thursday, March 7, 2024 2:11 PM
To: Ron Mick; Brian.Beach-PTR; Thomas.Young-PTR
Subject: FW: [External]RE: Global Pump Solutions Pumps

Hi Ron,
See below discount offered by GPS. Can you please help push this through this week?

	GPS	Below the Line	Comments
Original	$ 172,038.00	$ 231,333.74	
Discounted 15%	**$ 143,223.00**	**$ 176,685.48**	9% CMAR Contingency removed
Savings	$ 28,815.00	$ 54,648.26	

Thanks,
Charles

From: Kate.White <Kate.White@kiewit.com>
Sent: Thursday, March 7, 2024 1:53 PM
To: Charles.Wampler <Charles.Wampler@kiewit.com>
Cc: Andrew.Lattof <Andrew.Lattof@kiewit.com>; Michael.Odrowski <Michael.Odrowski@kiewit.com>
Subject: FW: [External]RE: Global Pump Solutions Pumps

FYI - See below from GPS.

Please let us know what the city directs and I'll revise the CO if they want to move forward.

Thanks,

Kate White
Supply Chain Specialist III

CITY OF SHERMAN CMAR
302 Cliff Hestand Sherman TX, 75090
Cell: (480) 521-3312
Kate.white@kiewit.com

From: Charles Norman <charles@gpspumps.com>
Sent: Thursday, March 7, 2024 12:28 PM
To: Kate.White <Kate.White@kiewit.com>; Marc Cashion <marc@gpspumps.com>
Cc: Andrew.Lattof <Andrew.Lattof@kiewit.com>; Lance Reed <lance@gpspumps.com>; Michael.Odrowski <Michael.Odrowski@kiewit.com>
Subject: Re: [External]RE: Global Pump Solutions Pumps

Kate,

I just got off the phone with the factory. In an effort to keep things moving and save everyone a lot of time here, we would like to offer a 15% discount off the original price adder quoted of $192,098.00. The factory believes they may be able to improve upon their source for some of the raw materials.

Therefore, final change order price adder would be $172,038.00 - $28,815.00 = **$143,223.00**

I had actually spoken with Plummer on this earlier today and it seems like there was some misunderstanding on the quantities in our change order, but would still like to extend this discount to the city.

Have a great day today!

Charles Norman
Mobile: (817) 781-5858
charles@gpspumps.com
www.GlobalPumpSolutions.net
4541 JD Mouser Pkwy
Alvarado, TX 76009

From: Kate.White <Kate.White@kiewit.com>
Sent: Thursday, March 7, 2024 9:49:34 AM
To: Charles Norman <charles@gpspumps.com>; Marc Cashion <marc@gpspumps.com>
Cc: Andrew.Lattof <Andrew.Lattof@kiewit.com>; Lance Reed <lance@gpspumps.com>; Michael.Odrowski <Michael.Odrowski@kiewit.com>
Subject: RE: [External]RE: Global Pump Solutions Pumps

Hi Charles,

Michael and I just spoke and we think it might impact their decision and help push this forward if you wouldn't mind looking into any discount. Thank you for your continued efforts on this and we'll keep you updated with any news.

Thanks,

Kate White
Supply Chain Specialist III

CITY OF SHERMAN CMAR
302 Cliff Hestand Sherman TX, 75090
Cell: (480) 521-3312
Kate.white@kiewit.com

From: Charles Norman <charles@gpspumps.com>
Sent: Thursday, March 7, 2024 8:27 AM
To: Kate.White <Kate.White@kiewit.com>; Marc Cashion <marc@gpspumps.com>
Cc: Andrew.Lattof <Andrew.Lattof@kiewit.com>; Lance Reed <lance@gpspumps.com>; Michael.Odrowski

<Michael.Odrowski@kiewit.com>
Subject: Re: [External]RE: Global Pump Solutions Pumps

Kate,

Ok. Considering all the effort that has been put into this already and the process in which would need to be taken place with the factory to reverse all these changes, do you think there would be any benefit in me seeing if the factory could offer any discounts to keep things moving the way they are currently?

Have a great day today!

Charles Norman
Mobile: (817) 781-5858
charles@gpspumps.com
www.GlobalPumpSolutions.net
4541 JD Mouser Pkwy
Alvarado, TX 76009

From: Kate.White <Kate.White@kiewit.com>
Sent: Thursday, March 7, 2024 9:05:58 AM
To: Charles Norman <charles@gpspumps.com>; Marc Cashion <marc@gpspumps.com>
Cc: Andrew.Lattof <Andrew.Lattof@kiewit.com>; Lance Reed <lance@gpspumps.com>; Michael.Odrowski <Michael.Odrowski@kiewit.com>
Subject: RE: [External]RE: Global Pump Solutions Pumps

Hi Charles,

The city said the cost of the upsized discharge elbows is too high and they will be included in the future pump upsizing project. However, I'm seeing more back and forth on the matter with the engineer. I would wait to change anything until we have better direction.

Thanks,

Kate White
Supply Chain Specialist III

CITY OF SHERMAN CMAR
302 Cliff Hestand Sherman TX, 75090
Cell: (480) 521-3312
Kate.white@kiewit.com

PLUMMER

Potential Change Order (PCO) Request

PROJECT NO: 1422-005-03

PROJECT: South Wastewater Treatment Plant - MBR
OWNER: City of Sherman
CONTRACTOR: Kiewit Construction South
ENGINEER: Plummer Associates, Inc.
PCO NO.: 08

DESCRIPTION:

NOTIFICATION BY CONTRACTOR

The Contractor proposes to make the additions, modifications, or deletions to the Work described in the Contract Documents, as shown in Attachment "A" and requests that you take the following action:

- ☐ Notify us that you concur that this change does not require a change in Contract time or amount and issue a Field Order.
- ☒ Issue a Change Order for performing the described change. Change in Contract amount is indicated in the attached detailed cost breakdown of labor, materials, equipment and all other costs associated with this change. Impacts on Contract Time are shown in the attached revised schedule.
- ☐ Authorize the Contractor to proceed with the described change. Payment will be requested at the unit price bid.
- ☐ Authorize the Contractor to proceed with the change under the time and materials provisions of the Contract.

By: Kory Kyllo Date: 4/2/2024

ENGINEER'S RESPONSE

We respond to your request as follows:

- ☐ We concur that this is a no cost or time change. See attached/forthcoming Field Order No. / comments.
- ☒ Your proposal is recommended to the Owner. See attached/forthcoming proposed Change Order.
- ☐ Proceed with the change at the unit price bid.
- ☐ Proceed with the change under the time and materials provisions of the Contract.
- ☐ Additional information is required to evaluate this request. Provide information as described in the attached comments and resubmit.
- ☐ Potential Change Order Request is not accepted.

Construction Manager: Brian Beach, PE CCM Date: 4/3/2024

Engineer: Date: 4.3.2024

Program Manager: Date: 4-4-24

Owner: Digitally signed by Tom Pruitt Date: 2024.04.04 11:22:26-05'00' Date: 4/4/2024

POTENTIAL CHANGE ORDER

Kiewit

Date: March 26, 2024	Potential Change Order #: PCO-0008	Revision #: 2
To: City of Sherman (COS) 220 W. Mulberry Street Sherman, TX 75090	Contract #: 1513-U Construction Manager at Risk (CMAR)	Project: South WWTP - MBR

Drawing, Specification, Equipment Number or Other Reference: 01 31 00 Project Management

Description of the Proposed Change Order Work: Control point and permanent baseline installation

CMAR received correspondence with Tom Pruitt. CMAR is providing this PCO along with the Basis of Estimate and attachments in accordance with General Conditions 1.01 A. 51., 10.01 A. and B., and 10.03 A. There is currently no anticipated impact on schedule.

This additional scope results in an addition for GMP A.

Construction				**Estimated Effect on Contract Price**
Lump Sum ($)	Contingency 9% ($)	Additional GCs (12.2% When>$155m)	Fee 9.95% ($)	Change Impact ($)
$7,204.70	$648.42	$958.08	$876.71	**$9,687.91**

Detailed components of above categories must accompany this estimate (discipline, craft, commodity of material, etc.)

Estimated Effect on Project Schedule (calendar days)		**Estimated Effect on Contract Terms**
Substantial Completion	N/A	N/A
Final Completion	N/A	N/A

Recommended by: Kiewit Water Facilities South Co.

Project Manager: _____ 4/2/2024
Contractor Date

Recommended by: Design Engineer

Name _____ Date _____

Approved by: Program Manager

Name _____ Date _____

Recommended by: Program Construction Manager

Name _____ Date _____

Approved by: City of Sherman

Name _____ Date _____

Approval Signatures are on the PCO cover sheet from Plummer

Basis of Estimate: Control point and permanent baseline installation

Summary

1. Permanent Material Supply	Total	$5,704.70
2. Permanent Material Install	Total	$1,500.00
	Grand Total	**$7,204.70**

1. Permanent Material Supply

Total	$5,704.70

On December 14th, the city of Sherman request from CMAR to set additional control points and permanent baseline for the project on behalf of Plummer (see attached correspondence from Tom Pruitt "FW_Survey needs.msg" and from Jerrod Barner "Re_Survey Monumentation and Control.msg").

The material was purchased from Berntsen for a total of $5,704.70, see attached "Survey monument Invoice – Berntsen INV 306351.pdf".

2. Permanent Material Install

Total	$1,500.00

The installation took 30 minutes per survey monument. There were 15 monuments to install so the total installation duration represents 7.5 hours.

The installation was performed by the Survey Manager due to the stage of the project. As per "COSK-PSE-AMD0001-Amendment 01", under the "Price Basis: General Conditions, Site Services, Early Procurement, and Contingency", the Survey Manager rate comes at $8,000.00 per week which represents $200.00 per hour.

Attachments

1. FW_Survey needs.msg
2. Survey monument Invoice – Berntsen INV 306351.pdf
3. Re_Survey Monumentation and Control.msg

KIEWIT WATER FACILITIES SOUTH CO.
2050 Roanoke Rd, Westlake, TX 76262

maxime.cousineau

De: Jerrod.Barner
Envoyé: 6 février 2024 06:43
À: Charles.Wampler
Objet: FW: Survey needs

Charles,

Below is the last I have from Tom in regards to the Survey Monuments.

JERROD BARNER
Sr. Survey Manager

Kiewit Water Facilities South Co.
302 Cliff Hestand Road, Sherman, TX 75090
C: 817-914-5997
www.kiewit.com

From: Pruitt, Tom <tomp@cityofsherman.com>
Sent: Thursday, December 14, 2023 8:01 AM
To: Kerr, Sarah <skerr@plummer.com>
Cc: Alan.Davis-PTR <adavis@plummer.com>; Jerrod.Barner <Jerrod.Barner@kiewit.com>
Subject: [EXTERNAL] Survey needs

This Message Is From an External Sender

Exercise caution regarding links and attachments. If you believe this email to be unsafe, use the Report Phish button in Outlook.

Report Suspicious

Sarah,

The point man for Kiewit Survey Team is Jerrod Barner. His number is 817-914-5997 and email jerrod.barner@kiewit.com.

This is a reminder to coordinate with Doug Underwood to Kiewit in setting another control point or two for them and for permanent baseline.

Doug shall coordinate with me for payment for this work, we authorize it.

Thanks,

Tom Pruitt, P.E.

Utility Engineer

Sherman
CLASSIC TOWN. BROAD HORIZON.

220 W Mulberry St.
Sherman, TX 75091
(903) 892-7212
tomp@cityofsherman.com ←New email

Berntsen®
5418 Monument Ln. Madison, WI 53704 | P: 800-356-7388 | F: 800-249-9794

INVOICE

Invoice No.	Date
306351	12/15/2023
Refer to Invoice Number	
306351	

Sold To
KIEWIT POWER CONSTRUCTORS CO
PO BOX 452500
OMAHA, NE 68145-2500

ATTN: ACCOUNTS PAYABLE

Ship To
KIEWIT WATER FACILITIES SOUTH
302 CLIFF HESTAND RD
SHERMAN, TX 75090-3560

ATTN: CHANDLER PETERSON

Sales Order	Cust No	Customer PO	Order Date	Tax	Mark Shipment	Terms
0706008-0000	008414	4503290148	12/7/2023	T		NET 30 DAY

Salesperson	Ship Date	Shipped Via	FOB Point	Ins	Tracking Number
JENNY ELLESTAD	12/14/2023	UPS	ORIGIN		1Z5764540391792546

Item	T	Quantity Order	BO	Ship	Part Number/Revision	Description	Unit Price $	Amount $
						WEB ORDER: 0		
001	S	15		15	BMAC6-PL	BENCHMARK ACCESS COVER COMPLETE UNIT FOR 6" PVC	80.00	1,200.00
002	S	15		15	MTSD14 A	CAP TOP SEC 3-1/4" FOR 3/4" M ALUM ROD BLANK/NO STAMPING	21.65	324.75
003	S	15		15	MTSDR3 A	ROD-TSD 3/4" X 3' MACHINED W/FLOATING THREAD	36.48	547.20
007	S	15		15	MHDR12 A	POINT HDR12 FOR 3/4 ROD	6.50	97.50
008	S	75		75	MHDRR5 B	ROD: 3/4" X 5' ALUMINUM ROD WITH FLOATING THREAD	31.00	2,325.00
009	S	15		15	MHDRR3 B	ROD: 3/4" X 3' ALUMINUM ROD WITH FLOATING THREAD	25.00	375.00
010	S	1		1	MDA A	KIT MANUAL DRIVING ADAPTER 9/16", 5/8" OR 3/4" ROD	135.94	135.94
						SUBTOTAL		5,005.39
						Texas .06250		356.55
						FREIGHT CHARGES		699.31
						Total $		6,061.25

REMIT PAYMENT TO: BERNTSEN INTL, PO BOX 8670, MADISON, WI 53708
ACH BANK: FIRST BUSINESS BANK ROUTING #: 075905787 ACCOUNT #: 108501800
WIRE TRANSFER BANK: FIRST BUSINESS BANK SWIFT: FBBMUS44 ROUTING #: 075905787 ACCOUNT #: 108556000
AR CONTACT AR@BERNTSEN.COM OR 608-249-8549 OPT 4

maxime.cousineau

De: Jerrod.Barner
Envoyé: 14 décembre 2023 16:57
À: Charles.Wampler
Objet: Re: Survey Monumentation and Control

These are not in our scope of work.

Jerrod

Sent from my iPhone

> On Dec 14, 2023, at 4:42 PM, Charles.Wampler <Charles.Wampler@kiewit.com> wrote:
>
> Hi Jerrod,
> Were these monuments in our scope of work or do we need a change order?
>
> Thanks,
> Charles

From: Jerrod.Barner <Jerrod.Barner@kiewit.com>
Sent: Wednesday, December 13, 2023 3:21 PM
To: Pruitt, Tom <tomp@cityofsherman.com>
Cc: Colin.Bunker <Colin.Bunker@kiewit.com>; kory.kyllo <kory.kyllo@kiewit.com>; Tyler.Bly <Tyler.Bly@kiewit.com>; John.Lavelle <John.Lavelle@Kiewit.com>; Gary.Burgess <Gary.Burgess@kiewit.com>; Charles.Wampler <Charles.Wampler@kiewit.com>
Subject: Survey Monumentation and Control

Tom,

Thank you for taking the time to discuss the issue with Survey Control Monuments and proposed solution going forward with me this afternoon in the Civil breakout session. Below is a summary of what we discussed:

1. As agreed, there is not sufficient Survey Monumentation for the project.
2. Kiewit plans to set permanent survey monumentation for the project.
    1. We will set Deep Rod Monuments that will be driven to 30’ or refusal.
3. Once set and cured Kiewit will let you know when they are ready to be surveyed and The City will engage their surveyor of choice to set Coordinates and Elevations on them.
4. Data provided back to Kiewit will have the following information for each monument.
    1. Surface Coordinates and Elevations
    2. Grid Coordinates and Elevations
    3. The Scale Factor to Covert between Grid & Surface Coordinates.

We will be happy to work with the licensed surveyor for any needs they may have from us. As we all know time is of the essence given the current schedule and pace of the project and we will need to have this completed before we begin any staking or construction of permanent structures. The material is on order for these monuments, and we will be setting them as soon as all material is on site.

Again, thank you for the help on this matter.

Regards,

JERROD BARNER
Sr. Survey Manager

Kiewit Water Facilities South Co.
302 Cliff Hestand Road, Sherman, TX 75090
C: 817-914-5997
www.kiewit.com

PLUMMER

Potential Change Order (PCO) Request

PROJECT NO: 1422-005-03

PROJECT: South Wastewater Treatment Plant - MBR
OWNER: City of Sherman
CONTRACTOR: Kiewit Construction South
ENGINEER: Plummer Associates, Inc.
PCO NO.: 009

DESCRIPTION:

NOTIFICATION BY CONTRACTOR

The Contractor proposes to make the additions, modifications, or deletions to the Work described in the Contract Documents, as shown in Attachment "A" and requests that you take the following action:

- ☐ Notify us that you concur that this change does not require a change in Contract time or amount and issue a Field Order.
- ☒ Issue a Change Order for performing the described change. Change in Contract amount is indicated in the attached detailed cost breakdown of labor, materials, equipment and all other costs associated with this change. Impacts on Contract Time are shown in the attached revised schedule.
- ☐ Authorize the Contractor to proceed with the described change. Payment will be requested at the unit price bid.
- ☐ Authorize the Contractor to proceed with the change under the time and materials provisions of the Contract.

By: Kory Kyllo Date: 3/29/2024

ENGINEER'S RESPONSE

We respond to your request as follows:

- ☐ We concur that this is a no cost or time change. See attached/forthcoming Field Order No. / comments.
- ☒ Your proposal is recommended to the Owner. See attached/forthcoming proposed Change Order.
- ☐ Proceed with the change at the unit price bid.
- ☐ Proceed with the change under the time and materials provisions of the Contract.
- ☐ Additional information is required to evaluate this request. Provide information as described in the attached comments and resubmit.
- ☐ Potential Change Order Request is not accepted.

Construction Manager: Brian Beach, PE CCM Date: 4/3/2024

Engineer: Date: 4·3·2024

Program Manager: Date: 4-4-24

Owner: Digitally signed by Tom Pruitt Date: 2024.04.04 11:25:00-05'00' Date: 4/4/2024

POTENTIAL CHANGE ORDER

Kiewit

Date: March 26, 2024	Potential Change Order #: PCO-0009	Revision #: 0
To: City of Sherman (COS) 220 W. Mulberry Street Sherman, TX 75090	Contract #: 1513-U Construction Manager at Risk (CMAR)	Project: South WWTP - MBR

Drawing, Specification, Equipment Number or Other Reference: Instruction for Proposers

Description of the Proposed Change Order Work: Partnering Meeting

Per Article 29 of the Instructions for Proposers (00 21 16), a proposal for partnering was presented to Pape-Dawson on August 18, 2023 for consideration, see attached email. This was reviewed and discussed with City of Shermans' Program Manager Pape-Dawson, see attached email chain. Paradyne Consulting Works provided an invoice for their services in conducting this Partnering meeting.

CMAR is providing this PCO along with the Basis of Estimate and attachments in accordance with General Conditions 1.01 A. 51., 10.01 A. and B., and 10.03 A. There is currently no anticipated impact on schedule.

This additional scope results in an addition for GMP A.

Construction				**Estimated Effect on Contract Price**
Lump Sum ($)	Contingency 9% ($)	Additional GCs (12.2% When>$155m)	Fee 9.95% ($)	Change Impact ($)
$9,129.29	$821.64	$1,214.01	$1,110.91	**$12,275.85**

Detailed components of above categories must accompany this estimate (discipline, craft, commodity of material, etc.)

Estimated Effect on Project Schedule (calendar days)		**Estimated Effect on Contract Terms**
Substantial Completion	N/A	N/A
Final Completion	N/A	N/A

Recommended by: Kiewit Water Facilities South Co.

Project Manager: _____ 3/29/2024
Contractor — Date

Recommended by: Design Engineer

Name _____ Date _____

Approved by: Program Manager

Name _____ Date _____

Recommended by: Program Construction Manager

Name _____ Date _____

Approved by: City of Sherman

Name _____ Date _____

Approval Signatures are on the PCO cover sheet from Plummer

Basis of Estimate: Partnering Meeting

Summary

1. Paradyne Partnering Meeting	Total	$9,129.29
	Grand Total	**$9,129.29**

1. Paradyne Partnering Meeting

Total	$9,129.29

On August 18th, Pape-Dawson Engineers requested from CMAR for support in coordinating a partnering meeting on September 25th. Paradyne consulting has been contacted to further develop the collaboration / relationship between all parties. This was reviewed and discussed with City of Shermans' Program Manager Pape-Dawson, see attached email chain. Paradyne Consulting Works provided an invoice for their services in conducting this Partnering meeting.

Attachments

1. AME 0002 Partnering Back up Docs (correspondence & invoice)

KIEWIT WATER FACILITIES SOUTH CO.
2050 Roanoke Rd, Westlake, TX 76262

Charles.Wampler

Subject: FW: Sherman Partnering

From: Colin.Bunker <Colin.Bunker@kiewit.com>
Sent: Tuesday, September 12, 2023 10:12 AM
To: Joe Castillo @PD <JCastillo@pape-dawson.com>
Cc: Toby Flinn @PD <TFlinn@pape-dawson.com>
Subject: RE: Sherman Partnering

Thanks for this Joe,
I've added David G and Quentin G per Alan and the Kiewit folks (Terry C, Colin B, Kory K, and Tyler B) and sent off to Jon S, the facilitator. I've suggest Jon reach out to Clint, Toby, Alan, and Myself for any initial questions. If you have been able to confirm the location, I can get a meeting invitation sent out to all so it is on all our calendars. Please share when known and if you prefer I send with a TBD location, please let me know. Thanks,

Kiewit

Colin Bunker
Kiewit Infrastructure Co.
10055 Trainstation Circle, Lone Tree, CO 80124
303-710-3848 cell
kiewit.com

From: Joe Castillo @PD <JCastillo@pape-dawson.com>
Sent: Monday, September 11, 2023 5:21 AM
To: Colin.Bunker <Colin.Bunker@kiewit.com>
Cc: Toby Flinn @PD <TFlinn@pape-dawson.com>
Subject: [EXTERNAL] RE: Sherman Partnering

Colin,

Please utilize the list below. You'll have to defer to Alan Davis if there's anyone else you all may feel that needs to attend from Plummer's side.

If you'll get the invite out and attach an agenda if available. Thanks Colin.

NAME	ORGANIZATION	TITLE	EMAIL
Clint Philpot	City of Sherman	Assistant City Manager	clintp@cityofsherman.com
Wayne Lee	City of Sherman	Director of Engineering	waynel@cityofsherman.co
Tom Pruitt	City of Sherman	Utility Engineer	tomp@cityofsherman.com
Nathan Whiddon	City of Sherman	Wastewater Superintendent	nathanw@cityofsherman.c
Jeff Rigdon	City of Sherman	Wastewater Supervisor	jeffr@cityofsherman.com
Chester Wilson	City of Sherman	Pre-Treatment Supervisor	chesterw@cityofsherman.c
Toby Flinn	Pape Dawson- Program Manager	Program Manager	tflinn@pape-dawson.com
Joe Castillo	Pape Dawson- Program Manager	Deputy Program Manager	jcastillo@pape-dawson.co
Ron Mick	Pape Dawson- Program Manager	Senior Project Manager	ron.mick@plussixengineer

Eugene Chung	Pape Dawson- Program Manager	Programs Control Director	echung@pape-dawson.com
Alan Davis	Plummer	Principal	adavis@plummer.com
Sherri van der Wege	Plummer	Senior Project Manager	svanderwege@plummer.com

Joe Castillo, CFM, PMP, LEED AP, ENV SP | **Programs Control Director**
Pape-Dawson Engineers
TEXAS ENGINEERING FIRM #470 | TEXAS SURVEYING FIRM #10193974

10350 Richmond Ave., Suite 200, Houston, TX 77042
P: 713-428-2400 | **E:** JCastillo@pape-dawson.com

Houston | San Antonio | Austin | Fort Worth | Dallas | New Braunfels | Corpus Christi

CONFIDENTIALITY NOTICE
This electronic mail transmission may be confidential, may be privileged, and should be read or retained only by the intended recipient. If you have received this transmission in error, please immediately notify the sender and delete it from your system.

From: Joe Castillo @PD
Sent: Thursday, September 7, 2023 6:13 PM
To: Colin.Bunker <Colin.Bunker@kiewit.com>; Toby Flinn @PD <TFlinn@pape-dawson.com>
Subject: RE: Sherman Partnering

Colin,

Standby for confirmation, looks like we will have availability at one of Sherman's large training facilities.

1. Working on the roster.
2. Generally speaking, times work, will continue to firm this up
3. Placeholder is out to Pape-Dawson attendees and a few select Sherman folks, still working on final roster and at that point, you can send out a formal invite
4. Will provide with final roster

Thanks Colin.

From: Colin.Bunker <Colin.Bunker@kiewit.com>
Sent: Wednesday, August 30, 2023 11:00 AM
To: Toby Flinn @PD <TFlinn@pape-dawson.com>
Cc: Joe Castillo @PD <JCastillo@pape-dawson.com>
Subject: RE: Sherman Partnering

Hi Toby
Jon was able to confirm the 25th. Below are the basic setup questions I need some help on. Can you please provide this week so we can lock in details and get initial questionnaires sent out? Thanks again for the help,

From Jon, There are only a few initial details to attend to:

1. The roster of attendees at the Partnering Meeting (Name / Position / Org / Email). We will have an Exec Huddle (PMs and up) for the first hour, and then the project team will join in. I need help with the roster for all other team members, can you please provide? I can work with Kory and Jon to setup a meeting location once we have a count.

2. Deciding on the hours and arranging the venue. I suggest: Does this timing suit your team? I think ending with a social is always a good idea.
    1. 11:00 – 12:00 Exec Huddle
    2. 12:00 – 1:00 Lunch for all
    3. 1:00 – 5:00 Team Partnering Meeting
    4. 5:00 - 6:00 Social Hour
3. Getting invitations out to this group (I can do this or you can) If you want to send out a placeholder to all participants we can update once a venue is secured, does that work?
4. Letting me know who the principals are from each organization for me to contact (PM or equivalent and the first line off-site exec) This one is a bit trickier on this job given our discussion yesterday, so I need your help for identifying which organizations need to be part of this group and which members will drive. Sounded like Alan for Plummer but I'm not sure who else.

Colin Bunker
Kiewit Infrastructure Co.
10055 Trainstation Circle, Lone Tree, CO 80124
303-710-3848 cell
kiewit.com

From: Toby Flinn @PD <TFlinn@pape-dawson.com>
Sent: Tuesday, August 29, 2023 12:46 PM
To: Colin.Bunker <Colin.Bunker@kiewit.com>
Cc: Joe Castillo @PD <JCastillo@pape-dawson.com>
Subject: [EXTERNAL] FW: Sherman Partnering

Colin, see below.

Toby Flinn, P.E. , PMP | **Vice President**
Pape-Dawson Engineers
TEXAS ENGINEERING FIRM #470 | TEXAS SURVEYING FIRM #10028800

911 Central Parkway North, Suite 400, San Antonio, TX 78232
P: 210.375.9000 | **E:** TFlinn@pape-dawson.com

San Antonio | Austin | Houston | Fort Worth | Dallas | New Braunfels | Corpus Christi

CONFIDENTIALITY NOTICE
This electronic mail transmission may be confidential, may be privileged, and should be read or retained only by the intended recipient. If you have received this transmission in error, please immediately notify the sender and delete it from your system.

From: Pruitt, Tom <tomp@cityofsherman.com>
Sent: Tuesday, August 29, 2023 1:43 PM
To: Toby Flinn @PD <TFlinn@pape-dawson.com>
Subject: RE: Sherman Partnering

Below, in RED, for responses.
Thanks,

Tom Pruitt, P.E.

Utility Engineer

Sherman
CLASSIC TOWN. BROAD HORIZON.

220 W Mulberry St.
Sherman, TX 75091
(903) 892-7212
tomp@cityofsherman.com ←New email

From: Toby Flinn @PD <TFlinn@pape-dawson.com>
Sent: Tuesday, August 29, 2023 1:38 PM
To: Pruitt, Tom <tomp@cityofsherman.com>
Subject: FW: Sherman Partnering

EXTERNAL EMAIL: -- Avoid clicking on links or files -- Be safe!

Tom,

Our partnering consultant cannot meet on Sept 6, sorry about that. Please see below the available dates below to select. Do these work?

Preferred: Sept 25***[Pruitt, Tom]*** Good anytime this date
Available: Sept 26 ***[Pruitt, Tom]*** Good for morning; I have a bid opening at 2:00
& Oct 9***[Pruitt, Tom]*** good all afternoon, have pre-P&Z meeting from 8:30 to noon.

Toby

Toby Flinn, P.E. , PMP | **Vice President**
Pape-Dawson Engineers
TEXAS ENGINEERING FIRM #470 | TEXAS SURVEYING FIRM #10028800

911 Central Parkway North, Suite 400, San Antonio, TX 78232
P: 210.375.9000 | **E:** TFlinn@pape-dawson.com

San Antonio | Austin | Houston | Fort Worth | Dallas | New Braunfels | Corpus Christi

CONFIDENTIALITY NOTICE
This electronic mail transmission may be confidential, may be privileged, and should be read or retained only by the intended recipient.
If you have received this transmission in error, please immediately notify the sender and delete it from your system.

From: Colin.Bunker <Colin.Bunker@kiewit.com>
Sent: Monday, August 28, 2023 1:51 PM
To: Toby Flinn @PD <TFlinn@pape-dawson.com>
Cc: kory.kyllo <kory.kyllo@kiewit.com>; Joe Castillo @PD <JCastillo@pape-dawson.com>
Subject: Sherman Partnering

Thanks Toby,

I'm sorry but when trying to secure the 6th of September for Partnering I discovered the facilitator was no longer available. After conferring with the facilitator and the Kiewit team it's looking like the following dates are available for our group:

Preferred: Sept 15,18,25
Available: Sept 26 & Oct 9

Can you please check with your team to see if one of these dates suits? Thanks very much,

<image001.png>

Colin Bunker
Kiewit Infrastructure Co.
10055 Trainstation Circle, Lone Tree, CO 80124
303-710-3848 cell
kiewit.com

Paradyne Consulting Works LLC
9949 E Seven Palms Drive
Scottsdale, AZ 85262
www.paradyneconsulting.com

INVOICE

BILL TO
Colin Bunker
Kiewit Sherman WWTP South

INVOICE # REP-5377
DATE 09/29/2023
DUE DATE 10/29/2023
TERMS Net 30

DATE		QTY	RATE	AMOUNT
09/25/2023	**Partnering Meeting**	1	6,750.00	6,750.00
	Airfare	1	1,126.81	1,126.81
	Ground Transportation	1	423.68	423.68
	Meals	1	306.41	306.41
	Printing & Materials	1	522.39	522.39

BALANCE DUE **$9,129.29**

Please make direct deposit to: U.S. Bank
Account #150875301064 | Routing #104000029
Remit address: 9949 E Seven Palms Dr. Scottsdale, AZ 85262
Total due in 30 days; overdue accounts subject to a service charge of 1% per month

PLUMMER

Potential Change Order (PCO) Request

PROJECT NO: 1422-005-03

PROJECT: South Wastewater Treatment Plant - MBR
OWNER: City of Sherman
CONTRACTOR: Kiewit Construction South
ENGINEER: Plummer Associates, Inc.
PCO NO.: 010

DESCRIPTION:

NOTIFICATION BY CONTRACTOR

The Contractor proposes to make the additions, modifications, or deletions to the Work described in the Contract Documents, as shown in Attachment "A" and requests that you take the following action:

- ☐ Notify us that you concur that this change does not require a change in Contract time or amount and issue a Field Order.
- ☒ Issue a Change Order for performing the described change. Change in Contract amount is indicated in the attached detailed cost breakdown of labor, materials, equipment and all other costs associated with this change. Impacts on Contract Time are shown in the attached revised schedule.
- ☐ Authorize the Contractor to proceed with the described change. Payment will be requested at the unit price bid.
- ☐ Authorize the Contractor to proceed with the change under the time and materials provisions of the Contract.

By: Kory Kyllo Date: 4/4/2024

ENGINEER'S RESPONSE

We respond to your request as follows:

- ☐ We concur that this is a no cost or time change. See attached/forthcoming Field Order No. / comments.
- ☒ Your proposal is recommended to the Owner. See attached/forthcoming proposed Change Order.
- ☐ Proceed with the change at the unit price bid.
- ☐ Proceed with the change under the time and materials provisions of the Contract.
- ☐ Additional information is required to evaluate this request. Provide information as described in the attached comments and resubmit.
- ☐ Potential Change Order Request is not accepted.

Construction Manager: _____ Date: 4/4/24

Engineer: _____ Date: 4-4-24

Program Manager: _____ Date: 4-4-24

Owner: _____ Date: 4/4/2024

Digitally signed by Tom Pruitt
Date: 2024.04.05 07:54:08-05'00'

POTENTIAL CHANGE ORDER

Kiewit

Date: April 04, 2024	Potential Change Order #: PCO-0010	Revision #: 0
To: City of Sherman (COS) 220 W. Mulberry Street Sherman, TX 75090	Contract #: 1513-U Construction Manager at Risk (CMAR)	Project: South WWTP - MBR

Drawing, Specification, Equipment Number or Other Reference: WCD 014 Eaton Electrical Equipment

Description of the Proposed Change Order Work: Eaton Electrical Equipment changes as per WCD 14

CMAR received WCD 014. CMAR is providing this PCO along with the Basis Estimate and attachments in accordance with General Conditions 1.01 A. 51., 10.01 A. and B., and 10.03 A.

The material lead time has not changed. Impacts on installation have not been evaluated and are not included.
The CMAR support services are T&M per Amendment 1 and are not included in this PCO.

This additional Scope results in an addition for GMP C – Equipment Package 3.

Construction				**Estimated Effect on Contract Price**
Lump Sum ($)	Contingency 9% ($)	Additional GCs (12.2% When>$155m)	Fee 9.95% ($)	Change Impact ($)
$109,868.00	$9,888.12	$14,610.25	$13,369.45	**$147,735.82**

Detailed components of above categories must accompany this estimate (discipline, craft, commodity of material, etc.)

Estimated Effect on Project Schedule (calendar days)		**Estimated Effect on Contract Terms**
Substantial Completion	N/A	N/A
Final Completion	N/A	N/A

Recommended by: Kiewit Water Facilities South Co.

Project Manager: _____ Contractor

4/4/2024
Date

Basis of Estimate: Eaton Electrical Equipment

Summary

1. Eaton Electrical Equipment Modification	Total	$109,868.00
	Grand Total	**$109,868.00**

1. Eaton Electrical Equipment Modification

Total	$109,868.00

The attached Work Change Directive make the following additions, modifications, or deletions to the Work described in the Contract Documents:

2. Drawing E-450, Blower Building, Switchboard SWBD-450
    a. Switchboard SWBD-450
        i. Additional breakers added for additional equipment.
3. Drawing E-550, Membrane Support Building, Switchboard SWBD-500 One-Line Diagram
    a. Additional 45KVA 480V to 208/120V added for Lighting Panel LP-500 for additional HVAC loads.
    b. Permeate Pump horsepower changed for 60 to 75 horsepower. The 60hp VFDs will now be used at the relift pump station. New 75 horsepower VFD required for permeate pumps.
    c. RAS Wetwell Mixers added, additional starters required.
    d. Additional breakers added for equipment being added.
4. Drawing E-556, Membrane Support Building, Electrical Room
    b. Lighting Panel LP-500
        i. Additional lighting panel provided for HVAC Equipment and other equipment.
5. Drawings E-700, Tertiary Filters, MCC-1 North and South Modifications
    a. Added mini power center MPC-700 for the filter additional.
    b. Utilizing the 60HP VFDs originally planned for permeate pumps for the relift Pumps.

Exclusions from the Elliott quote

1. Drawing E-331, Equalization Basin, Power Panel PP-330 One-Line Diagram
    a. Power Panel PP-550 – **Shipped to site on February 29th**
        i. Added two (2) 90A/3P Breakers due to increase in hp of air compressors.
4. Drawing E-556, Membrane Support Building, Electrical Room
    a. Lighting Panel LP-550 – **Shipped to site on February 22nd**
        i. Change main breaker from 100A/3P to 125A/3P to account for additional loads.
        ii. Additional breakers were added for HVAC Equipment.

KIEWIT WATER FACILITIES SOUTH CO.
2050 Roanoke Rd, Westlake, TX 76262

Attachments

1. COSK-PSE-WCD0014 Eaton Changes
2. C001 – Adder R001 rev 1.
3. Elliot Sherman Weekly Meeting Message

KIEWIT WATER FACILITIES SOUTH CO.
2050 Roanoke Rd, Westlake, TX 76262

Project:	South Wastewater Treatment Plant - MBR	**Project Number:**	
Owner:	Greater Texoma Utility Authority/City of Sherman	1513-U	
Contractor:	Kiewit Water Facilities South Co.	105718	
Engineer:	Plummer Associates	1422-005-02	

Work Change Directive No.: 14 **Description:** Eaton Electrical Equipment

Specification: N/A

Drawing No.: varies **Detail Description:** Revise Electrical Equipment provided by Eaton

Make the following additions, modifications, or deletions to the Work described in the Contract Documents:

Provide changes described on the attached list from the Electrical Engineer.

Purpose of Work Change Directive:

This change aligns equipment with updated IFC drawings as indicated on the attached list from the Electrical Engineer.

The Owner directs the Contractor to proceed with Work described in this Work Change Directive. Compensation for this Work will be determined using the methods described below. Costs for the Work Change Directive may not exceed the total authorized compensation shown for this Work Change Directive shown below without authorization of the Owner by other Work Change Directives or by Change Order. Contractor is to submit a Change Proposal when impacts on Contract Price and Contract Times can be determined. A Change Order or Contract Amendment is to be issued to incorporate changes in Contract Price and / or Contract Times.

Basis of Compensation:

☐ Unit Prices ☒ Lump Sum calculated using Cost of Work provisions in General Conditions Paragraph 12.01

☐ Time and Materials using Cost of Work provisions in General Conditions Paragraph 12.01

☐ Allowance based on provisions in General Conditions Paragraph 11.02.

Required Documentation:

☒ Detailed cost breakdown attached showing labor, materials, equipment and all other costs for this change

☒ Schedule attached to show impacts and justification for requested change in Contract Times if applicable

Compensation for this Work Change Directive may not exceed: $ N/A

Project:	South Wastewater Treatment Plant - MBR	**Project Number:**	
Owner:	Greater Texoma Utility Authority/City of Sherman	1513-U	
Contractor:	Kiewit Water Facilities South Co.	105718	
Engineer:	Plummer Associates	1422-005-02	

Recommended by: Design Engineer

Name: [signature] Date: 4.2.2024

Recommended by: Project Construction Manager

Name: [signature] Date: 4/1/24

Approved by: Kiewit Water Facilities South Co.

Name: [signature] Date: 4/4/2024

Approved by: Program Manager

Name: [signature] Date: 4/2/24

Approved by: Greater Texoma Utility Authority

Digitally signed by Paul Sigle
DN: O=GTUA, CN=Paul Sigle, E=paul@gtua.org
Reason: I am approving this document
Location:
Date: 2024.04.03 09:14:16-05'00'
Foxit PDF Editor Version: 2023.2.0

Name: [signature] Date: 4-3-2024

Approved by: City of Sherman

Digitally signed by Tom Pruitt
Date: 2024.04.03 08:04:05-05'00'

Name: [signature] Date:

1. Drawing E-331, Equalization Basin, Power Panel PP-330 One-Line Diagram
    a. Power Panel PP-550
        i. Added two (2) 90A/3P Breakers due to increase in hp of air compressors.
2. Drawing E-450, Blower Building, Switchboard SWBD-450
    a. Switchboard SWBD-450
        i. Additional breakers added for additional equipment.
3. Drawing E-550, Membrane Support Building, Switchboard SWBD-500 One-Line Diagram
    a. Additional 45KVA 480V to 208/120V added for Lighting Panel LP-500 for additional HVAC loads.
    b. Permeate Pump horsepower changed for 60 to 75 horsepower. The 60hp VFDs will now be used at the relift pump station. New 75 horsepower VFD required for permeate pumps.
    c. RAS Wetwell Mixers added, additional starters required.
    d. Additional breakers added for equipment being added.
4. Drawing E-556, Membrane Support Building, Electrical Room
    a. Lighting Panel LP-550
        i. Change main breaker from 100A/3P to 125A/3P to account for additional loads.
        ii. Additional breakers were added for HVAC Equipment.
    b. Lighting Panel LP-500
        i. Additional lighting panel provided for HVAC Equipment and other equipment.
5. Drawings E-700, Tertiary Filters, MCC-1 North and South Modifications
    a. Added mini power center MPC-700 for the filter additional.
    b. Utilizing the 60HP VFDs originally planned for permeate pumps for the relift pumps.

ELLIOTT ELECTRIC SUPPLY

CO01 - Adder R001

Date:	3/4/2024	**Subtotal Cost: $**	**109,868.00**	Shipping Address:	
Customer:	Kiewit	Estimated Freight:			
Project:	Wastewater Treatn	**Total Cost: $**	**109,868.00**		
Cust. PO:	man Wastewater S	**Approval Signature:**		Shipping Method:	☐ Standard
Elliott BO:	97-18778			☐ Next Day ☐ Two Day	☐ Other

This material will not be entered without this signed change order. Customer will be charged freight unless vendor minimums are met or special freight is requested.

Items

Quantity	Type	Catalog Number	Leadtime	Unit Price	Extended Price
1		R001 Adder			
		change name SWB-200 to SWBD-200			
		Remove 400A Breaker			
		Adjust (1) 500A to 600A			
		change name SWB-450 to SWBD-450			
		Add (1) 500A Breaker, (1) 30A Breaker			
		and (1) 40A Breaker to Section 1			
		Add ((1) 500A Breaker and (1) 40A Breaker			
		to section 5			
		Change name from SWB-500 to SWBD-500			
		Add (4) 30A Breakers and (2) 125A Breaker			
		to section 1			
		Adjust (1) 40A Breaker to 30A			
		Adjust (6) 110A Breaker to 125A			
		Adjust (2) 110A Breaker to 90A			
		Adjust (1) 110A Breaker to 60A			
		Add (4) 30A Breakers to section 5			
		Add (3) 75HP VFD for Permeate Pumps 1-3			
		Add (1) LP-550			
		Add (1) T-550			
		Add (1) T-500			
		Add (1) MPC-700			
		Add (2) RAS Wetwell Mixers			
1	R001	Switchboard Changes		$ 17,867.00	$ 17,867.00
1	R001	VFD's		$ 39,867.00	$ 39,867.00
1	R001	Enclosed Control		$ 14,400.00	$ 14,400.00
1	R001	XFMR/MPC		$ 35,200.00	$ 35,200.00
1	R001	Panelboard		$ 2,534.00	$ 2,534.00

Item No.	Qty	Product	Description
	1	Drives - Enclosed	EGS 6-Pulse Enclosed Drive w/ 5% Dual DC Link Choke, 75 HP (56 KW) Low Overload (IL) Rated, 480VAC Three Phase Input, NEMA 12 Enclosure

Catalog No EGS0964A220D010014*
Designation Permeate Pump 1

Catalog No	Qty	List of Materials
Circuit Breaker	1	Circuit Breaker
Engineered Options	1	Engineered Options
--->100KAIC Rated	1	--->100KAIC Rated
DV/DT Filter	1	DV/DT Filter
Light Kit	1	30mm Power On (White), Drive Run (Green), & Drive Fault (Red) Push-To-Test Light Kit - 10250T Series
Misc Light	5	Misc 30mm Push-To-Test Pilot Light - 10250T Series
Timer Relay	1	Timer Relay
Heavy Duty Control Relay	4	Heavy Duty Control Relay
Oversized CPT (250VA Additional)	1	Oversized CPT (250VA Additional)
Standard Enclosure	1	CX Enclosure
Varnished Boards (Standard)	1	Varnished Boards (Standard)
3 x DI, 3 x DO, 1 x thermistor, 24 Vdc/EXT	1	Exp IO - 3 x DI, 3 x DO, 1 x thermistor, 24 Vdc/EXT
3 x PT100 RTD input	1	Exp IO - 3 x PT100 RTD input

Item No.	Qty	Product	Description
	1	Drives - Enclosed	EGS 6-Pulse Enclosed Drive w/ 5% Dual DC Link Choke, 75 HP (56 KW) Low Overload (IL) Rated, 480VAC Three Phase Input, NEMA 12 Enclosure

Catalog No EGS0964A220D010014*
Designation Permeate Pump 2

Catalog No	Qty	List of Materials
Circuit Breaker	1	Circuit Breaker
Engineered Options	1	Engineered Options
--->100KAIC Rated	1	--->100KAIC Rated
DV/DT Filter	1	DV/DT Filter
Light Kit	1	30mm Power On (White), Drive Run (Green), & Drive Fault (Red) Push-To-Test Light Kit - 10250T Series
Misc Light	5	Misc 30mm Push-To-Test Pilot Light - 10250T Series
Timer Relay	1	Timer Relay
Heavy Duty Control Relay	4	Heavy Duty Control Relay
Oversized CPT (250VA Additional)	1	Oversized CPT (250VA Additional)
Standard	1	CX Enclosure

Catalog No	Qty	List of Materials
Enclosure		
Varnished Boards (Standard)	1	Varnished Boards (Standard)
3 x DI, 3 x DO, 1 x thermistor, 24 Vdc/EXT	1	Exp IO - 3 x DI, 3 x DO, 1 x thermistor, 24 Vdc/EXT
3 x PT100 RTD input	1	Exp IO - 3 x PT100 RTD input

Item No.	Qty	Product	Description
	1	Drives - Enclosed	EGS 6-Pulse Enclosed Drive w/ 5% Dual DC Link Choke, 75 HP (56 KW) Low Overload (IL) Rated, 480VAC Three Phase Input, NEMA 12 Enclosure

Catalog No EGS0964A220D010014*
Designation Permeate Pump 3

Catalog No	Qty	List of Materials
Circuit Breaker	1	Circuit Breaker
Engineered Options	1	Engineered Options
--->100KAIC Rated	1	--->100KAIC Rated
DV/DT Filter	1	DV/DT Filter
Light Kit	1	30mm Power On (White), Drive Run (Green), & Drive Fault (Red) Push-To-Test Light Kit - 10250T Series
Misc Light	5	Misc 30mm Push-To-Test Pilot Light - 10250T Series
Timer Relay	1	Timer Relay
Heavy Duty Control Relay	4	Heavy Duty Control Relay
Oversized CPT (250VA Additional)	1	Oversized CPT (250VA Additional)
Standard Enclosure	1	CX Enclosure
Varnished Boards (Standard)	1	Varnished Boards (Standard)
3 x DI, 3 x DO, 1 x thermistor, 24 Vdc/EXT	1	Exp IO - 3 x DI, 3 x DO, 1 x thermistor, 24 Vdc/EXT
3 x PT100 RTD input	1	Exp IO - 3 x PT100 RTD input

Item No.	Qty	Product	Description
	1	Panelboards	PRL1X, 42 Circuits, 225A, Fully Rated, 208Y/120V 3Ph 4W, Tin Plated Copper Bus, 22kAIC, 100A, 3P PDD23F0100 Main Breaker[Top Fed], Surface Mounted

Catalog No PCSAEDBTD42C
Designation LP-550

Qty	List of Materials
1	100A, 3P PDD23F0100 Main Breaker
30	20A, 1P QBHW Branch Breaker
6	30A, 2P QBHW Branch Breaker
1	Tin-Plated Copper Main Bus, 225 Amps
1	Std. Bolted Cu Ground Bar (Cu Cable Only)

Qty	List of Materials
1	Panel Nameplate - White with Black Letters
1	Type 3R Enclosure: LWPQ2048

Item No.	Qty	Product	Description
	1	Dry Type Transformers	Transformer Type: General Purpose Vented 3 Phase, 45 KVA, 1 K-Factor 480 Primary Volts 208Y/120 Secondary Volts Temperature Rise 80C with 220C Insulation System Copper Winding Material Sound Reduction : 0 NEMA ST-20 Audible Sound Level: 50 Efficiency : DOE 10 CFR Part 431 (2016) UL Listed : Y Enclosure Type: NEMA 2 (for N3R, select Weather Shield in Mods tab) Operating Frequency: 60 HZ **Catalog No** V48M28B4516CU **Designation** T-550

Qty	List of Materials
1	3 Phase, 45 KVA, 480 Primary Volts, 208Y/120 Secondary Volts, 80C with 220C Insulation System Temperature Rise, Copper Winding Material, 60 HZ
1	XFMR WEATHERSHIELD KIT FITS FRAME FR942
1	TX Lug Kit/1PH 15-37.5KVA / 3PH 15-45KVA

Item No.	Qty	Product	Description
	1	Dry Type Transformers	Transformer Type: Mini Power Centers 1 Phase, 7.5 KVA, 1 K-Factor 480 Primary Volts 120/240 Secondary Volts Temperature Rise 115C Copper Winding Material Sound Reduction : 0 NEMA ST-20 Audible Sound Level: 45 UL Listed : Y Enclosure Type: NEMA 4X Stainless Steel Operating Frequency: 60 HZ Stainless Steel (316) Enclosure **Catalog No** P48G11S0718CUBS64X **Designation** MPC-700

Qty	List of Materials
1	1 Phase, 7.5 KVA, 480 Primary Volts, 120/240 Secondary Volts, 115C Temperature Rise, Copper Winding Material, 60 HZ

Item No.	Qty	Product	Description
	1	Dry Type Transformers	Transformer Type: General Purpose Vented 3 Phase, 45 KVA, 1 K-Factor 480 Primary Volts 208Y/120 Secondary Volts Temperature Rise 80C with 220C Insulation System Copper Winding Material Sound Reduction : 0 NEMA ST-20 Audible Sound Level: 50 Efficiency : DOE 10 CFR Part 431 (2016) UL Listed : Y Enclosure Type: NEMA 2 (for N3R, select Weather Shield in Mods tab) Operating Frequency: 60 HZ **Catalog No** V48M28B4516CU **Designation** T-500

Qty	List of Materials
1	3 Phase, 45 KVA, 480 Primary Volts, 208Y/120 Secondary Volts, 80C with 220C Insulation System Temperature Rise, Copper Winding Material, 60 HZ
1	XFMR WEATHERSHIELD KIT FITS FRAME FR942
1	TX Lug Kit/1PH 15-37.5KVA / 3PH 15-45KVA

Item No.	Qty	Product	Description
	1	Enclosed Controls	ECN2418C0D-R63/CC14P1P2P20P71S3W12C14C14C14C37C36, NEMA - Freedom, NEMA 12 - Dusttight, 5 HP, 460V, Size 1, 120V/60 110V/50 Coil, Circuit Breaker - 15 amp, Drawing Number: , LIST OF MATERIAL:, ECN2418C0D - FVNR Combo Starter, HMCPE or Mag. Trip, STD-SSOL OLR, w/CPT **Catalog No** ECN2418C0D-R63/CC14P1P2P2 **Designation** RAS Wetwell Mixer #1

Catalog No	Qty	List of Materials
C37	1	Wired per drawings loaded in Bidman
R63/C	1	R63/C-Solid State Overload, FLA 4-20
C36	1	Add and Engineer in wiring customer supplied FLYGHT MINICAS 120 Door Mounted
C3	1	C3-With 100 VA extra capacity CPT, 120V/60HZ, 110V 50HZ secondary w/2 primary & 1 secondary fuse
C14	4	C14-4 Pole Control Relay, (Unwired without diagram), A570 Rating - 120V Coil (2NO/2NC)
P1	1	P1-Push-to-Test pilot Light(red RUN) Wired to Coil
P2	1	P2-Push-to-Test pilot Light(green OFF) Wired in Series with Auxiliary Contact
P71	1	P71-Amber Fault Pilot Light
P20	1	P20-Amber RUN Pilot Light
S3	1	S3-HAND-OFF-AUTO Selector Switch
W12	1	W12-Reduced Copy of Custom Wiring Diagram Laminated on Inside of Door

Project Name: Sherman Post Oak 480V Equipment Procurement

Negotiation No: DA750914X3K1

Alternate No: R001

Item No.	Qty	Product	Description
	1	Enclosed Controls	ECN2418C0D-R63/CC14P1P2P20P71S3W12C14C14C14C37C36, NEMA - Freedom, NEMA 12 - Dusttight, 5 HP, 460V, Size 1, 120V/60 110V/50 Coil, Circuit Breaker - 15 amp, Drawing Number: , LIST OF MATERIAL:, ECN2418C0D - FVNR Combo Starter, HMCPE or Mag. Trip, STD-SSOL OLR, w/CPT

Catalog No ECN2418C0D-R63/CC14P1P2P2
Designation RAS Wetwell Mixer #2

Catalog No	Qty	List of Materials
C37	1	Wired per drawings loaded in Bidman
R63/C	1	R63/C-Solid State Overload, FLA 4-20
C36	1	Add and Engineer in wiring customer supplied FLYGHT MINICAS 120 Door Mounted
C3	1	C3-With 100 VA extra capacity CPT, 120V/60HZ, 110V 50HZ secondary w/2 primary & 1 secondary fuse
C14	4	C14-4 Pole Control Relay, (Unwired without diagram), A570 Rating - 120V Coil (2NO/2NC)
P1	1	P1-Push-to-Test pilot Light(red RUN) Wired to Coil
P2	1	P2-Push-to-Test pilot Light(green OFF) Wired in Series with Auxiliary Contact
P71	1	P71-Amber Fault Pilot Light
P20	1	P20-Amber RUN Pilot Light
S3	1	S3-HAND-OFF-AUTO Selector Switch
W12	1	W12-Reduced Copy of Custom Wiring Diagram Laminated on Inside of Door

Eaton Selling Policy 25-000 applies.

All orders must be released for manufacture within 90 days of date of order entry. If approval drawings are required, drawings must be returned approved for release within 60 days of mailing. If drawings are not returned accordingly, and/or if shipment is delayed for any reason, the price of the order will increase by 1.0% per month or fraction thereof for the time the shipment is delayed.

Seller shall not be responsible for any failure to perform, or delay in performance of, its obligations resulting from the COVID-19 pandemic or any future epidemic, and Buyer shall not be entitled to any damages resulting thereof.

maxime.cousineau

De: Andrew.Lattof
Envoyé: 19 février 2024 13:56
À: Brett.Brice; Kevin.Baca; Michael.Kolosey; Caleb.Fisher; Kory.Kyllo; Colin Price; Shannan Frohlich; Moseley, Patrick; Maria.Rincon; michaelAcordonier@eaton.com; Daniel Jock; Brian.Beach-PTR; Robin.Walker; Priyank.Parikh1
Cc: Jissel.Ramirez; van der Wege, Sherri
Objet: RE: Elliot/Sherman Weekly Meeting

Hi All,

Here are the notes from today's meeting. For items marked MFG or AG Electrical Contractor there is no action required for this agreement. For items where a change order is needed, Colin will draft a quote and send back to this group.

Permeate Pump VFD 1, 2, and 3 are now 75HP per addendum 3. These are provided by Eaton but were quoted and entered at 60HP per attached Summary of Changes. Keep 3 on order and add 3 additional at 75 HP going forward. Same wiring design. Standard BOM submittal to follow. Change Order to existing Kiewit Agreement with Elliot.

Tank Mixer Soft Starters 1 and 2 are not listed as CMAR furnished but are on my BOM and released on this order. Keep the ones currently on order. Change order to Kiewit's agreement to add 2 more. Wiring Diagram submittal will be required.

There is a second T-550 and LP-550 but we only have one on my BOM. Change order to existing Kiewit agreement.

The drawings call for a large number of Flanged Disconnects which I have never seen on a water job before. Please confirm this is what the engineer/owner want. Will be part of AG electrical contractor scope. The amounts in bid documents were correct but it will not be added to the Kiewit/Elliot agreement.

I also did not see control wiring drawings for these items as well.

Please confirm if the below items are to be Vendor Furnished or Furnished by EC:
Carbon Feed Pump VFD 1 and 2 Feed Pump Manufacturer
Aeration Blower Exhaust Fan 1, 2, 3, 4 AG Electrical Contractor
Air Scour Blower VFD (MFG) and Filter 1, 2,3, 4 (AG Electric) Aeration Blower VFD (MFG) and Filter 1, 2, 3, 4 (Ag Electric) MBR Pump Gallery Supply Fan 1, 2 MBR Pump Gallery Exhaust Fan 1, 2 (AG Electric) RAS Wet Well Mixer 2 Controller 1, 2 (Starters will be a change order, already incl in an above comment)- Listed as CMAR but not on my BOM

Relift Pump 1, 2, 3 - Listed as CMAR but not on my BOM (Original 60 HP ones repurposed here) Sludge Transfer Pump VFD 1, 2 (Included on existing BOM)- Listed as CMAR but not on my BOM Sludge Holding Tank Blower VFD (Blower MFG) and Filter 1, 2 (AG Electric) Sludge Holding Tank Blower cooling fan controller 1, 2 (Ag Electric)

Breaker size changes and additions coming. Patrick working on list.

Submittals approved in November. Blue line changes being worked on for changes. Andrew forwarded via email.

Global Pump to send Pump Relays to Michael C., Andrew to coordinate.

-Andrew

Andrew Lattof
Supply Chain Manager

CITY OF SHERMAN CMAR
10055 Trainstation Circle, Lone Tree CO, 80124
Cell: (847) 754-7097

BROAD HORIZONS | WWTP CMAR

-----Original Appointment-----
From: Andrew.Lattof
Sent: Wednesday, January 17, 2024 9:25 AM
To: Andrew.Lattof; Brett.Brice; Kevin.Baca; Michael.Kolosey; Caleb.Fisher; Kory.Kyllo; Colin Price; Shannan Frohlich; Moseley, Patrick; Maria.Rincon; michaelAcordonier@eaton.com; Daniel Jock; Brian.Beach-PTR; Robin.Walker; Priyank.Parikh1
Cc: Jissel.Ramirez; van der Wege, Sherri
Subject: Elliot/Sherman Weekly Meeting
When: Monday, February 19, 2024 12:00 PM-12:30 PM (UTC-07:00) Mountain Time (US & Canada).
Where: Microsoft Teams Meeting

Weekly Progress/Action Item review meeting

Microsoft Teams meeting

Join on your computer, mobile app or room device
Click here to join the meeting

Meeting ID: 230 527 344 244
Passcode: U6eT2k
Download Teams | Join on the web

Or call in (audio only)
+1 402-979-7582,,857092369# United States, Omaha
Phone Conference ID: 857 092 369#
Find a local number | Reset PIN

Learn More | Meeting options

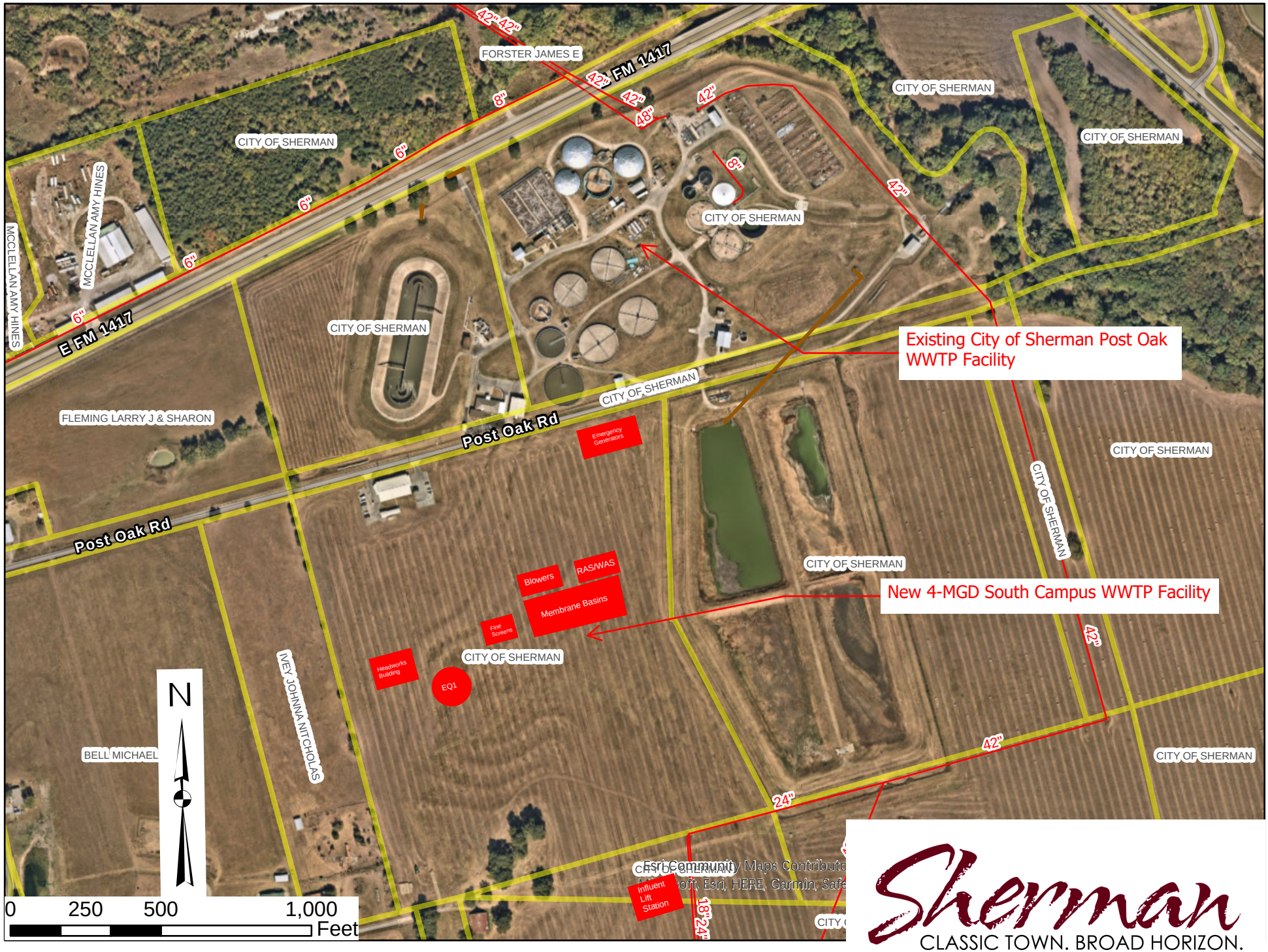
Existing City of Sherman Post Oak WWTP Facility
New 4-MGD South Campus WWTP Facility
FM 1417
E FM 1417
Post Oak Rd
Post Oak Rd
CITY OF SHERMAN
FORSTER JAMES E
MCCLELLAN AMY HINES
FLEMING LARRY J & SHARON
BELL MICHAEL
IVEY JOHNNA NITCHOLAS
Emergency Generators
Blowers
RAS/WAS
Membrane Basins
Fine Screens
Headworks Building
EQ1
Influent Lift Station
42"
48"
24"
18"
8"
6"
N
0
250
500
1,000
Feet
Esri Community Maps Contributo
Sherman
CLASSIC TOWN. BROAD HORIZON.

SHERMAN CITY COUNCIL
Agenda Communication Form

City Council Regular Meeting Agenda Item No. H.6.

Meeting Date: 4/15/2024

Prepared By: Tom Pruitt, Utility Engineer, Tom Pruitt, Utility Engineer

Approved By:

Caption:

**** RESOLUTION NO. 7286***

Approving the Greater Texoma Utility Authority's Intention to Award the Sherman WTP - LAS and Rapid Mix Improvements Project

Issue:

To consider approving the Greater Texoma Utility Authority's intention to award the Sherman WTP - LAS and Rapid Mix Improvements Project

Background:

In response to recent growth in municipal and industrial water demands, engineering design for proposed improvements will consist of construction of new water treatment facilities to increase the capacity of the existing water treatment plant (WTP).

On May 2, 2022, City Council awarded Garver, LLC a professional services contract to design construction plans to install an additional 5-million gallons a day (MGD) treatment capacity to the existing building facilities.

On May 2, 2023, City Council awarded Addendum No. 1 to Garver's contract which provided master planning and engineered construction drawings for a new building and other needed facilities and appurtanances that incorporated space for Ultrafiltration (UF) and reverse osmosis (RO) membrane up to an additional 30 (MGD) of treatment capacity. Space was incorporated for modular growth sections for major components.

On November 6, 2023, Addendum No. 2 provided services for preparation of new bidding documents and for advertising, bidding and award services, and inspection services for new chemical feed facilities during construction. These tasks were necessary to proceed **before** the new 30-MGD building because they were needed as part of our Electrodyalysis Removal, or EDR, rehabilitation project currently underway by City Crews.

The project was advertised March 7 with a bid opening March 27th. We received three responsive bidders and are recommending Red River Construction to undertake the work. Their bidders references look good and we have done several projects with them in the very near past at the Wastewater Treatment Plant.

Origination:

Engineering Department

Financial Consideration:

Funding in the amount of $4,671,700.00 will be provided through the GTUA Open Market bonds.

Staff Recommendation:
It is recommended that the City Council approve GTUA's intention to Award the Sherman WTP - LAS and Rapid Mix Improvements Project

Alternatives:
As may be directed by the City Council

Attachments:
1. Resolution No. 7286
2. Recommendation of Award and Bid Tabulation
3. Sherman WTP Site - Location Map

RESOLUTION NO. 7286

A RESOLUTION OF THE CITY COUNCIL OF THE CITY OF SHERMAN, TEXAS, APPROVING THE GREATER TEXOMA UTILITY AUTHORITY'S INTENTION TO AWARD THE SHERMAN WTP – LAS AND RAPID MIX IMPROVEMENTS PROJECT TO RED RIVER CONSTRUCTION COMPANY; FINDING AND DETERMINING THAT THE MEETING AT WHICH THIS RESOLUTION IS PASSED WAS NOTICED AND IS OPEN TO THE PUBLIC AS REQUIRED BY LAW.

BE IT RESOLVED BY THE CITY COUNCIL OF THE CITY OF SHERMAN, TEXAS:

SECTION 1. That the City of Sherman hereby approves the Greater Texoma Utility Authority's intention to award the Sherman WTP – LAS and Rapid Mix Improvements Project to Red River Construction Company in the amount of Four Million Six Hundred Seventy-One Thousand Seven Hundred Dollars and Zero Cents ($4,671,700.00).

SECTION 2. That it is hereby officially found and determined that the meeting at which this resolution is passed is open to the public and that public notice of the time, place, and purpose of said meeting was given as required by law.

DULY PASSED AND APPROVED BY THE CITY COUNCIL OF THE CITY OF SHERMAN, TEXAS on this the 15th day of April 2024.

CITY OF SHERMAN, TEXAS

BY: _____
DAVID PLYLER, MAYOR

ATTEST:

BY:_____
LINDA ASHBY, CITY CLERK

APPROVED AS TO FORM AND CONTENT:
THE LAW FIRM OF ABERNATHY,
ROEDER, BOYD & HULLETT, P.C.

BY: _____
RYAN D. PITTMAN, CITY ATTORNEY

3000 Internet Blvd
Suite 400
Frisco, TX 75034

TEL 972.377.7480
FAX 972.377.8380

www.GarverUSA.com

April 4, 2024

Tom Pruitt, PE
220 W Mulberry Street
Sherman, TX 75090

Re: Sherman WTP – LAS and Rapid Mix Improvements
Recommendation of Award

Mr. Pruitt:

Three bids were received for the City of Sherman WTP LAS and Rapid Mix Improvements Project at Sherman City Hall at 2:30 PM on March 27, 2024. A bid tabulation is attached for reference. The bids have been checked for accuracy and compliance with the bid documents, and the bidders have provided the required documentation.

We consider Red River Construction Company, the low bidder, to be a responsive, responsible bidder. We believe that the bid submitted by Red River Construction Company represents good value for the City of Sherman, and recommend that the construction contract be awarded to Red River Construction Company in the amount of $4,671,700 by accepting the Total Base Bid Price.

Please call if there are any questions.

Sincerely,

GARVER, LLC

Lance Klement

Lance Klement, PE
Senior Project Manager

Attachments: Bid tabulation

CITY OF SHERMAN
PROJECT NAME: SHERMAN WTP - LAS AND RAPID MIX IMPROVEMENTS
GARVER PROJECT NO: 21W05325
BID PROPOSAL FORM: ORIGINAL
BIDS RECEIVED: MARCH 27, 2024 2:30 PM

				Archer Western Construction, LLC		Gracon Construction, Inc.		Red River Construction Co.	
ITEM	**QTY**	**UNITS**	**DESCRIPTION**	**UNIT PRICE**	**TOTAL AMOUNT**	**UNIT PRICE**	**TOTAL AMOUNT**	**UNIT PRICE**	**TOTAL AMOUNT**
1	**1**	LS	All Work as defined in the Contract Documents, except those listed separately below	$2,197,500.00	**$2,197,500.00**	$2,610,000.00	**$2,610,000.00**	$1,933,200.00	**$1,933,200.00**
2	**1**	LS	Work identified as "Rapid Mix Vaults", see Sheets 17 - 41, except those listed separately below	$2,573,600.00	**$2,573,600.00**	$1,650,000.00	**$1,650,000.00**	$1,770,000.00	**$1,770,000.00**
3	**1**	LS	Work identified as "North Chemical Facility", see Sheets 42 - 52, expcept those listed separately below	$550,800.00	**$550,800.00**	$190,000.00	**$190,000.00**	$235,000.00	**$235,000.00**
4	**1**	LS	Spot locate and vertify all existing crossing and tie-in locations	$14,700.00	**$14,700.00**	$40,000.00	**$40,000.00**	$39,500.00	**$39,500.00**
5	**1**	LS	All Trench and Excavation Safety Systems	$7,500.00	**$7,500.00**	$5,000.00	**$5,000.00**	$4,000.00	**$4,000.00**
6	**1**	LS	All SCADA integration work provided by RLC Automation as specified in Section 40 68 05	$310,000.00	**$310,000.00**	$340,000.00	**$340,000.00**	$350,000.00	**$350,000.00**
7	**1**	LS	Work identified as "Chemical Feed System" as specified in Section 44 44 20	$76,900.00	**$76,900.00**	$190,000.00	**$190,000.00**	$190,000.00	**$190,000.00**
8	**1**	LS	Contingency Allowance 1 - WCDs	$100,000.00	**$100,000.00**	$100,000.00	**$100,000.00**	$100,000.00	**$100,000.00**
9	**1**	LS	Contingency Allowance 2 - Additional Independent Testing	$50,000.00	**$50,000.00**	$50,000.00	**$50,000.00**	$50,000.00	**$50,000.00**
TOTAL BASE BID AMOUNTS					**$5,881,000.00**		**$5,175,000.00**		**$4,671,700.00**

ADDITIVE BID ALTERNATE									
ITEM	**QTY**	**UNITS**	**DESCRIPTION**	**UNIT PRICE**	**TOTAL AMOUNT**	**UNIT PRICE**	**TOTAL AMOUNT**	**UNIT PRICE**	**TOTAL AMOUNT**
AB1	**1**	LS	Chemical Feed Additive Bid Alternate	$102,600.00	**$102,600.00**	$15,000.00	**$15,000.00**	NO BID	**NO BID**

TOTAL BASE BID AMOUNT	**$5,778,400.00**	**$5,160,000.00**	**$4,671,700.00**
TOTAL BASE BID AMOUNT WITH AB1	**$5,983,600.00**	**$5,190,000.00**	**NO BID**

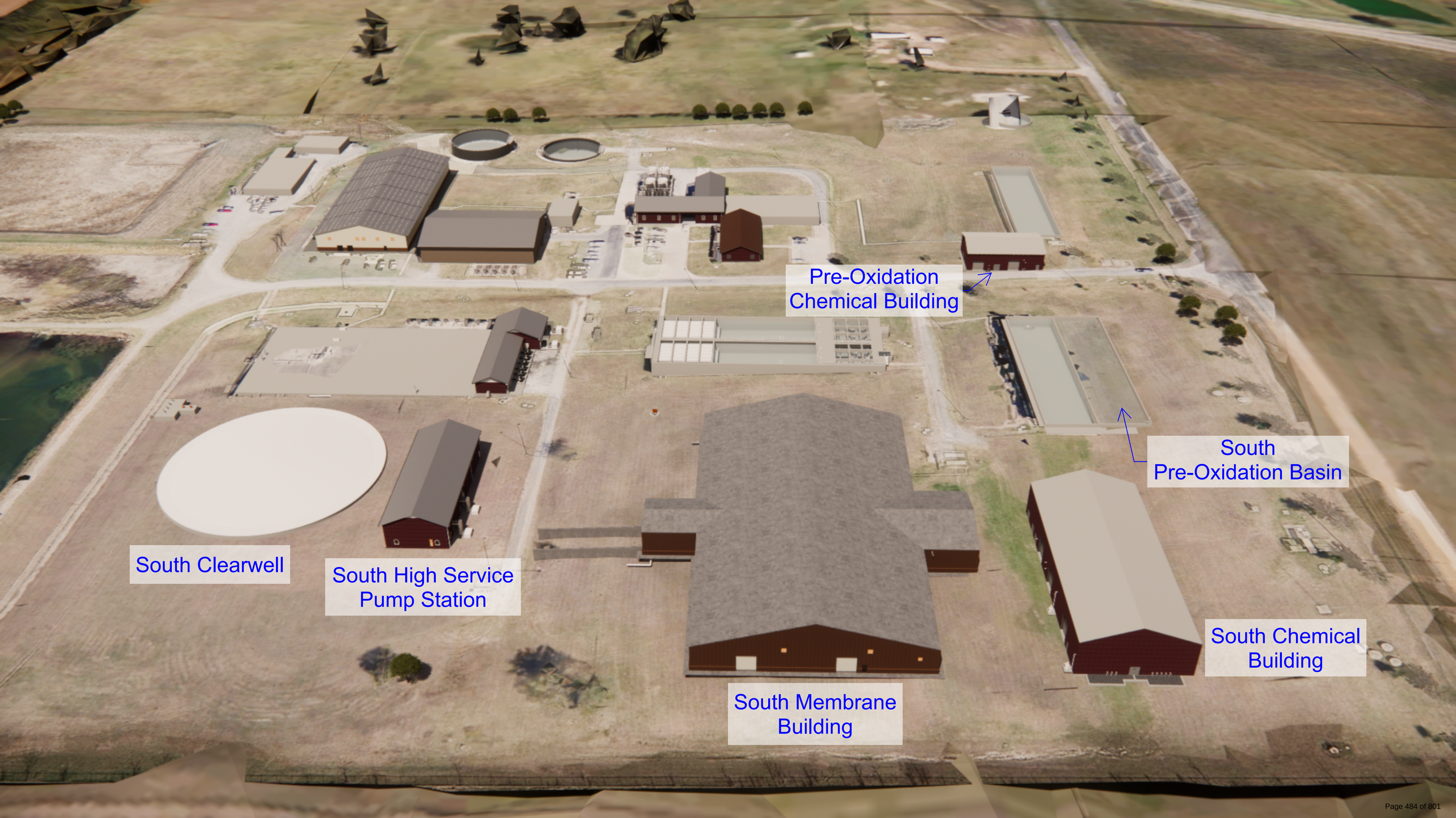
Pre-Oxidation
Chemical Building
South
Pre-Oxidation Basin
South Clearwell
South High Service
Pump Station
South Membrane
Building
South Chemical
Building

SHERMAN CITY COUNCIL
Agenda Communication Form

City Council Regular Meeting Agenda Item No. H.7.

Meeting Date: 4/15/2024

Prepared By: Wayne Lee, Director of Engineering

Approved By: Robby Hefton, City Manager

Caption:

**** RESOLUTION NO. 7287***

Authorizing Execution of a Professional Services Agreement with Wade Trim, Inc. for the Wells Street Extension

Issue:

To consider a Professional Services Agreement with Wade Trim, Inc. for design and construction phase services for the Wells Street Extension project.

Background:

The current Wells Street terminates just east of Patricia Street. This project will extend Wells Street, to the east, to just past Valentine Drive. This connection will allow residents and City services to circulate without having to back down Valentine Drive or turn around in a residential driveway. Additional design will be performed to create a schematic design for a future Wells St extension to the eastern boundary of Copley Addition, Phase Two with a future connection with Stephens Road.

Origination:

Engineering Department

Financial Consideration:

Total funding needed for this agreement is $167,160 and will be funded by Certificates of Obligation (Project code 24-035 Exp)

Staff Recommendation:

It is recommended that the professional service agreement with Wade Trim, Inc. be approved.

Alternatives:

As may be directed by City Council.

Attachments:

1. Resolution No. 7287
2. Professional Services Agreement
3. Location Map

RESOLUTION NO. 7287

A RESOLUTION OF THE CITY COUNCIL OF THE CITY OF SHERMAN, TEXAS, AUTHORIZING EXECUTION OF A PROFESSIONAL SERVICES AGREEMENT WITH WADE TRIM, INC. FOR THE WELLS STREET EXTENSION; FINDING AND DETERMINING THAT THE MEETING AT WHICH THIS RESOLUTION IS PASSED WAS NOTICED AND IS OPEN TO THE PUBLIC AS REQUIRED BY LAW.

BE IT RESOLVED BY THE CITY COUNCIL OF THE CITY OF SHERMAN, TEXAS:

SECTION 1. That the City Manager be and is hereby authorized and directed, subject to all contract documents being properly completed and approved as to form and content by the City Attorney, to execute a Professional Services Agreement with Wade Trim, Inc. for the Wells Street Extension, in accordance with all contract documents attached hereto and made a part hereof for all purposes.

SECTION 2. That it is hereby officially found and determined that the meeting at which this resolution is passed is open to the public and that public notice of the time, place, and purpose of said meeting was given as required by law.

DULY PASSED AND APPROVED BY THE CITY COUNCIL OF THE CITY OF SHERMAN, TEXAS on this the 15th day of April 2024.

CITY OF SHERMAN, TEXAS

BY: _____
DAVID PLYLER, MAYOR

ATTEST:

BY:_____
LINDA ASHBY, CITY CLERK

APPROVED AS TO FORM AND CONTENT:
THE LAW FIRM OF ABERNATHY,
ROEDER, BOYD & HULLETT, P.C.

BY: _____
RYAN D. PITTMAN, CITY ATTORNEY

AGREEMENT

BETWEEN

THE CITY OF SHERMAN, TEXAS AND

WADE TRIM, INC.

FOR

PROFESSIONAL SERVICES

Made as of the_____day of_____, 2024:

Between City: **The City of Sherman, Texas**
220 W. Mulberry Street
Sherman, Texas 75090
Telephone: (903) 892-7208

and Consultant: **Wade Trim, Inc.**
9800 Hillwood Parkway, Suite 140
Fort Worth, TX 76177
Telephone: (682) 237-7718

for the following Project: **3112 - Wells Street Extension**

THIS AGREEMENT ("Agreement") is made and entered into by and between the City of Sherman, Texas, a home-rule municipality ("City"), and Wade Trim, Inc., a Michigan corporation ("Consultant"), to be effective from and after the date as provided above. City and Consultant are at times each referred to herein as a "party" or collectively as the "parties."

WHEREAS, City desires to engage Consultant to provide professional services for the 3112 - Wells Street Extension Project ("Project"); and

WHEREAS, Consultant desires to render such professional services ("Services") for City on the terms and conditions provided herein.

NOW, THEREFORE, KNOW ALL PERSONS BY THESE PRESENTS:

That for and in consideration of the covenants contained herein, for the mutual benefits to be obtained hereby and for other good and valuable consideration, the receipt and sufficiency of which are hereby acknowledged, the parties agree as follows:

ARTICLE 1
CONSULTANT'S SERVICES

1.1 **Employment of Consultant** – City hereby agrees to retain Consultant to perform the Services in connection with the Project. Consultant agrees to perform the Services in accordance with the terms and conditions of this Agreement. Consultant further agrees that if any employee of Consultant who is performing the day-to-day Services under this Agreement for the Project is separated, for any reason, from employment with Consultant, Consultant shall provide City with written notice thereof at least five (5) business days' prior to said separation unless circumstances reasonably warrant a shorter notice period, which shall not exceed two (2) business days following the separation.

1.2 **Scope of Services** – The parties agree that Consultant shall perform the Services as are set forth and described in **Exhibit A**, attached hereto and incorporated herein by reference for all purposes ("Scope of Services"). The parties understand and agree that deviations or modifications to the Scope of Services described in **Exhibit A**, in the form of a written amendment to this Agreement, may be authorized from time to time by City ("Amendment").

1.2.1 **Requirement of Written Amendment** – "Extra" work, "claims" invoiced as "extra" work or "claims" which have not been issued as a duly executed, written Amendment by the Sherman Director of Engineering or designee will not be authorized for payment and/or shall not become part of this Agreement. A duly executed, written Amendment requiring additional funding of $50,000 or more of the original contract amount shall be preceded by the Sherman City Council's authorization for the Sherman City Manager to execute said Amendment.

1.2.2 **CONSULTANT SHALL NOT PERFORM ANY "EXTRA" WORK AND/OR ADDITIONAL SERVICES WITHOUT A DULY EXECUTED, WRITTEN AMENDMENT ISSUED BY THE CITY**.

1.3 **Schedule of Work** – Consultant agrees to commence work immediately on the execution of this Agreement, and to proceed diligently with said work to completion as described in the Project Engineering Budget Summary, attached hereto as **Exhibit B** and incorporated herein by reference for all purposes.

1.4 **Standard of Care** – Consultant shall perform the Services required hereunder in accordance with the prevailing engineering standard of care by exercising the skill and care ordinarily utilized by engineers performing the same or similar services under the same or similar circumstances in the State of Texas.

ARTICLE 2
CITY'S RESPONSIBILITIES

City shall do the following in a timely manner so as not to delay the Services of Consultant:

2.1 **Project Data** – City shall furnish required information that is reasonably requested by Consultant and that City has in its possession at the time of Consultant's request, as expeditiously as necessary for the orderly progress of the Project, and Consultant shall be entitled to rely upon the accuracy and completeness of the information furnished by City under this Article 2.1.

2.2 **City Project Manager** – When necessary in City's sole discretion, City shall designate a representative authorized to act on City's behalf with respect to the Project ("Project Manager"). City, the Project Manager and/or his or her authorized designee shall examine the documents submitted by Consultant and shall render any required decisions pertaining thereto as soon as practicable to avoid unreasonable delay in the progress of Consultant's Services.

ARTICLE 3
CONSULTANT'S COMPENSATION

3.1 **Compensation for Consultant's Services** – As described in "Article 1, Consultant's Services" of this Agreement, compensation for this Project shall be: (a) for Basic Services, on either a Lump Sum basis or an hourly (time and materials) basis in an amount not to exceed **one hundred fourteen thousand eight hundred twenty Dollars ($114,820.00)**; and (b) paid in accordance for Special Services, in an amount not to exceed **fifty two thousand three hundred forty Dollars ($52,340.00)** (collectively, "Consultant's Fee"); and (c) paid in accordance with this Article 3 and the Project Engineering Budget Summary as set forth in **Exhibit B**.

3.1.1 **Completion of Record Documents** – City and Consultant agree that the completion of Record Documents and/or "As-Built" Documents, including hard copy formatting and electronic formatting, shall be completed, submitted to, and accepted by City prior to final payment. Completion of the Record Documents and/or "As-Built" documents shall be included in the Consultant's Fee and considered to be within the Scope of Services defined under this Agreement." The electronic formatting shall be consistent with the standards established in **Exhibit C**, Guidelines for Computer Aided Design and Drafting ("CADD"), which is attached hereto and incorporated herein by reference for all purposes.

3.1.2 **Disputes between City and Construction Contractor** – If the Project involves Consultant performing Construction Administration Services relating to an agreement between a Construction Contractor ("Contractor") and City, and on receipt of a written request by City, Consultant shall

research previous and existing conditions of the Project, and make a determination whether or not to certify that sufficient cause exists for City to declare Contractor in default of the terms and conditions of the Agreement. Consultant shall submit his findings in writing to City, or submit a written request for a specific extension of time (including the basis for such extension), within fifteen (15) calendar days of receipt of the written request from City. City and Consultant agree that if requested by City, completion of this task shall be included in the Consultant's Fee and considered to be within the Scope of Services as defined under this Agreement.

3.1.3 **Consultation and Approval by Governmental Authorities and Franchised Utilities** – Consultant shall be solely responsible for identifying and analyzing the requirements of governmental agencies and all franchise utilities involved with the Project, and for consulting with such agencies and utilities to obtain all necessary approvals and/or permissions. Consultant shall be responsible for preparation and timely submittal of documents required for review, approval and/or recording by such agencies and/or utilities. Consultant shall be solely responsible for making such changes in the construction documents ("Construction Documents") as may be required by existing written standards promulgated by such agencies and/or utilities at no additional charge to City.

3.2 **Direct Expenses** – Direct Expenses ("Direct Expenses") are included in Consultant's Fee as described in Article 3.1 of this Agreement and include actual reasonable and necessary expenditures made by Consultant and Consultant's employees and subcontractors in the interest of the Project. All submitted Direct Expenses are to be within the amounts as stated in the Project Engineering Budget Summary set forth in **Exhibit B**, and consistent with **Exhibit D**, Guidelines for Direct Expenses; General and Administrative Markup; Travel and Subsistence Expenses, which is attached hereto and incorporated herein by reference for all purposes. Consultant shall be solely responsible for the auditing and accuracy of all Direct Expenses, including those of its subcontractors, prior to submitting to City for reimbursement. Any over-payment by City for errors in submittals for reimbursement may be deducted from Consultant's subsequent payment for Services; provided, however, that this shall not be City's sole and exclusive remedy for said over-payment.

3.3 **Additional Services** – Consultant shall provide the Services as described in the Scope of Services set forth in **Exhibit A** of this Agreement. If authorized in writing by City, Consultant shall provide additional services, to be compensated as provided in an Amendment to the Contract on a cost not to exceed sum or hourly basis in accordance with this paragraph ("Additional Services") and a mutually agreed estimate of man-hours and expenses. These services may include, but are not limited to:

3.3.1 Additional meetings, hearings, work-sessions or other similar presentations

which are not provided for or contemplated in the Scope of Services described in **Exhibit A**.

3.3.2 Additional drafts and revisions to the Project which are not provided for or contemplated in the Scope of Services as described in **Exhibit A**.

3.3.3 Additional copies of final reports and construction plans which are not provided for or contemplated in the Scope of Services as described in **Exhibit A**.

3.3.4 Photography, professional massing models which are not provided for or contemplated in the Scope of Services as described in **Exhibit A**.

3.3.5 Compensation for Additional Services authorized by City shall be in addition to Consultant's Fee and shall be based on direct billable labor rates and expenses.

3.3.6 Compensation for Additional Services authorized by City shall be in addition to Consultant's Fee and shall be based on an hourly basis according to the following personnel rates. The rates set forth in this chart are subject to reasonable change provided prior written notice of said change is given to and approved by City.

Hourly Billable Rates by Position

Position	Hourly Rate
Principal	$290.00
Senior Project Manager	$245.00
Professional Surveyor	$180.00
Project Engineer	$180.00
Technician	$120.00
Survey Crew	$100.00
Admin	$95.00

3.4 **Invoices** – No payment to Consultant shall be made until Consultant tenders an invoice to City. Consultant shall submit monthly invoices for Services rendered, based upon the actual percentage of work complete at the time the invoice is prepared, or shall submit invoices to City immediately upon completion of each individual task listed in **Exhibit B**. On all submitted invoices for Services rendered, Consultant shall include appropriate background materials to support the submitted charges on said invoice. Upon request, such background material may include, but is not limited to, employee timesheets, invoices for work obtained from other parties, and receipts and/or log information relating to Direct Expenses. All

invoices shall provide a summary methodology for administrative markup and/or overhead charges.

3.5 **Timing of Payment** – City shall make payment to Consultant for said invoices within thirty (30) days following receipt and acceptance thereof. The parties agree that payment by City to Consultant is considered to be complete upon mailing of payment by City. Furthermore, the parties agree that the payment is considered to be mailed on the date that the payment is postmarked.

3.6 **Disputed Payment Procedures** – In the event of a disputed or contested billing by City, only that portion so contested may be withheld from payment, and the undisputed portion will be paid. City shall notify Consultant of a disputed invoice, or portion of an invoice, in writing by the twenty-first (21st) calendar day after the date City receives the invoice. City shall provide Consultant an opportunity to cure the basis of the dispute. If a dispute is resolved in favor of Consultant, City shall proceed to process said invoice, or the disputed portion of the invoice, within the provisions of Article 3.5 of this Agreement. If a dispute is resolved in favor of City, Consultant shall submit to City a corrected invoice, reflecting any and all payment(s) of the undisputed amounts, documenting the credited amounts, and identifying outstanding amounts on said invoice to aid City in processing payment for the remaining balance. Such revised invoice shall have a new invoice number, clearly referencing the previous submitted invoice. City agrees to exercise reasonableness in contesting any billing or portion thereof that has background materials supporting the submitted charges.

3.7 **Failure to Pay** – Failure of City to pay an invoice, for a reason other than on written notification as stated in the provisions of Article 3.6 of this Agreement, to Consultant within sixty (60) days from the date of the invoice shall grant Consultant the right, in addition to any and all other rights provided, to, upon written notice to City, suspend performance under this Agreement, and such act or acts shall not be deemed a breach of this Agreement. However, Consultant shall not suspend performance under this Agreement prior to the tenth (10th) calendar day after written notice of suspension was provided to City, in accordance with Chapter 2251, Subchapter "D" of the TEX. GOV'T CODE. City shall not be required to pay any invoice submitted by Consultant if Consultant breached any provision(s) herein.

3.8 **Adjusted Compensation** – If the Scope of the Project ("Scope of the Project") or if the Services are materially changed due to no error by Consultant in the performance of Services under this Agreement, the amounts of Consultant's compensation shall be equitably adjusted as approved by City in its sole discretion. Any additional amounts paid to Consultant as a result of any material change to the Scope of the Project shall be authorized by written Change Order duly executed by both parties before the Services are performed.

3.9 **Project Suspension** – If the Project is suspended or abandoned in whole or in part for more than three (3) months, Consultant shall be entitled to compensation

for any and all work completed to the satisfaction of City in accordance with the provisions of this Agreement prior to suspension or abandonment. In the event of such suspension or abandonment, Consultant shall deliver to City all finished or unfinished documents, data, studies, drawings, maps, models, reports, photographs and/or any other items prepared by Consultant in connection with this Agreement prior to Consultant receiving final payment. If the Project is resumed after being suspended for more than three (3) months, Consultant's compensation shall be equitably adjusted as approved by City. Any additional amounts paid to Consultant after the Project is resumed shall be agreed upon in writing by both parties before the services are performed.

3.10 **Fixed Budget Limit for Construction Cost** – If a fixed budget limit for the Construction Cost has been established, the Consultant shall be permitted to make reasonable adjustments in the scope of the Project (Segment One only) and to include alternate bid items in the Bid Proposal to adjust the Construction Cost to the fixed limit. However, this paragraph shall not operate to increase the fixed budget limit of the Construction Cost established in this Agreement. All adjustments in the Scope of the Project (Segment One only) shall be approved by the City and documented in writing. Should the lowest bona fide bid for construction of the Project be in excess of 130% of $706,000.00 due to the negligence or other fault of the Consultant, the City may (1) give written approval of an increase in such fixed limit, (2) authorize rebidding or re-negotiating of the Project, (3) terminate the Project and this Agreement in accordance herewith, or (4), require that the Consultant adjust the Project scope or quality, or both, as necessary to reduce the Construction Cost to within the budgetary constraints. In the case of (4) the Consultant, without additional charge to the City, shall consult with the City and shall revise and modify the drawings and specifications as necessary to achieve compliance with the fixed limitation on Construction Cost. These revisions and modifications may include splitting the Project into multiple Construction Phases that will fall within budget constraints. The Consultant shall provide the services defined in Exhibit A, as required, for each of the new phases created by splitting the Project. Absent negligence on the part of the Consultant in making its estimates of probable Construction Cost, providing services as defined in Exhibit A shall be the limit of the Consultant's liability arising from the establishment of such fixed limitation of Construction Costs.

ARTICLE 4
OWNERSHIP OF DOCUMENTS

4.1 **Documents Property of City** – The Project is the property of City, and Consultant may not use the documents, plans, data, studies, surveys, drawings, maps, models, reports, photographs and/or any materials for any other purpose not relating to the Project without City's prior written consent. City shall be furnished with such reproductions of the Project, plans, data, documents, maps, and any other information as defined in **Exhibit A**. Upon completion of the work, or any earlier termination of this Agreement under Article 3 and/or Article 8 of this Agreement, Consultant will revise plans, data, documents, maps, and any other

information as defined in **Exhibit A** to reflect changes while working on the Project through the date of completion of the work, as solely determined by City, or the effective date of any earlier termination of this Agreement under Article 3 and/or Article 8 of this Agreement, and promptly furnish the same to City in an acceptable electronic format. All such reproductions shall be the property of City who may use them without Consultant's permission for any purpose relating to the Project, including, but not limited to, completion of the Project, and/or additions, alterations, modifications, and/or revisions to the Project. Any reuse of the documents not relating to the Project shall be at City's own risk.

4.2 **Documents Subject to Laws Regarding Public Disclosure** – Consultant acknowledges that City is a governmental entity and that all documents, plans, data, studies, surveys, drawings, maps, models, reports, photographs and/or any items prepared or furnished by Consultant (and Consultant's professional associates and/or sub-consultants) under this Agreement are instruments of service in respect of the Project and property of City. Upon completion of the Project, all of the documents, plans, data, studies, surveys, drawings, maps, models, reports, photographs and/or any items prepared or furnished by Consultant (and Consultant's professional associates and/or sub-consultants) shall thereafter be subject to the Texas Public Information Act (Chapter 552, TEX. GOV'T CODE, as amended) and any other applicable laws requiring public disclosure of the information contained in said documents. Consultant is not responsible and is hereby released from responsibility for use of documents for any purpose other than for the Project.

ARTICLE 5
CONSULTANT'S INSURANCE REQUIREMENTS

5.1 **Required General Liability Insurance** – Consistent with the terms and provisions of **Exhibit E**, Contractor Insurance Guidelines, which is attached hereto and incorporated herein by reference for all purposes, Consultant shall procure and maintain throughout the term of this Agreement, at no expense to City, a general liability insurance policy with a company that maintains a minimum rating of "A" by A.M. Best's Key Rating Guide, or other equivalent rating service(s), and is authorized to transact business in the State of Texas, in an amount not less than One Million and 00/100 Dollars ($1,000,000.00) for each occurrence, and Two Million and 00/100 Dollars ($2,000,000.00) in the aggregate. Such policy shall name City, its officers, and employees as additional insureds as to all applicable coverage. Such policy shall provide for a waiver of subrogation against City for injuries, including death, property damage, or any other loss to the extent that same is covered by the proceeds of the insurance. Such policy shall require the provision of written notice to City at least thirty (30) days prior to cancellation of any policies, evidenced by return receipt or United States Certified Mail. Consultant shall furnish City with certificates and required endorsement(s) evidencing such coverage prior to commencing work on the Project.

5.2 **Required Professional Liability Insurance** – Consistent with the terms and provisions of **Exhibit E**, Consultant shall procure and maintain throughout the term of this Agreement, at no expense to City, a professional liability (errors and omissions) insurance policy with a company that maintains a minimum rating of "A" by A.M. Best's Key Rating Guide, or other equivalent rating service(s), and is authorized to transact business in the State of Texas, in an amount not less than One Million and 00/100 Dollars ($1,000,000.00) for each claim, and Two Million and 00/100 Dollars ($2,000,000.00) in the aggregate. Such policy shall require the provision of written notice to City at least thirty (30) days prior to cancellation of any policies, evidenced by return receipt or United States Certified Mail. Consultant shall furnish City with certificates and required endorsement(s) evidencing such coverage prior to commencing work on the Project.

5.3 **Required Workers Compensation Insurance** – Consistent with the terms and provisions of **Exhibit E**, Consultant shall procure and maintain throughout the term of this Agreement, at no expense to City, all Statutory Workers Compensation Insurance as required by the laws of the State of Texas. Such insurance policy shall be with a company that maintains a minimum rating of "A" by A.M. Best's Key Rating Guide, or other equivalent service(s), and is authorized to transact business in the State of Texas. Such policy shall require the provision of written notice to City at least thirty (30) days prior to cancellation of any policies, evidenced by return receipt or United States Certified Mail. Consultant shall furnish City with certificates and required endorsement(s) evidencing such coverage prior to commencing work on the Project.

5.4 **Circumstances Requiring Umbrella Coverage or Excess Liability Coverage** – If the Project's size and scope warrant, and if identified on the checklist located in **Exhibit E**, Consultant shall procure and maintain throughout the term of this Agreement, at no expense to City, an umbrella coverage or excess liability coverage insurance policy with a company that maintains a minimum rating of "A" by A.M. Best's Key Rating Guide, or other equivalent rating service(s), and is authorized to transact business in the State of Texas, in an amount of Two Million and 00/100 Dollars ($2,000,000.00). Such policy shall require the provision of written notice to City at least thirty (30) days prior to cancellation of any policies, evidenced by return receipt or United States Certified Mail. Consultant shall furnish City with certificates and required endorsement(s) evidencing such coverage prior to commencing work on the Project.

ARTICLE 6
CONSULTANT'S ACCOUNTING RECORDS

Records of Direct Expenses and expenses pertaining to services performed in conjunction with the Project shall be kept on the basis of generally accepted accounting principles. Invoices will be sent to City as indicated in Article 3.4 of this Agreement. Copies of employee time sheets, receipts for direct expense items and other records of Project expenses will be made available if requested.

ARTICLE 7
AUDITS AND RECORDS/VENDOR DISCLOSURE

Consultant agrees that at any time during normal business hours and as often as City may deem necessary, Consultant shall make available to representatives of City for examination all of its records with respect to all matters covered by this Agreement, and will permit such representatives of City to audit, examine, copy and make excerpts or transcripts from such records, and to make audits of all contracts, invoices, materials, payrolls, records of personnel, conditions of employment and other data relating to all matters covered by this Agreement, and for a period of four (4) years from the date of final settlement of this Agreement or for such other or longer period, if any, as may be required by applicable statute or other lawful requirement.

Consultant agrees that it is further aware of the vendor disclosure requirements set forth in Chapter 176, TEX. LOC. GOV'T CODE, as amended, and will abide by the same. In this connection, a lawful representative of Consultant shall execute and deliver to City the Conflict of Interest Questionnaire, Form CIQ, attached hereto as **Exhibit F** and incorporated herein for all purposes, no later than the Effective Date of this Agreement.

ARTICLE 8
TERMINATION OF AGREEMENT/REMEDIES

City may, upon thirty (30) days written notice to Consultant, terminate this Agreement, for any reason or no reason at all, before the termination date hereof, without prejudice to any other remedy it may have. If City terminates this Agreement due to a default of and/or breach by Consultant and the expense of finishing the Project exceeds Consultant's Fee at the time of termination, Consultant waives its right to any portion of Consultant's Fee as set forth in Article 3 of this Agreement and agrees to pay any costs over and above the fee which City is required to pay in order to finish the Project. On any default and/or breach by Consultant, City may elect not to terminate the Agreement, and in such event it may make good the deficiency in which the default consists, and deduct the costs from Consultant's Fee due Consultant as set forth in Article 3 of this Agreement. If City terminates this Agreement and Consultant is not in default of the Agreement, Consultant shall be entitled to compensation for any and all work completed to the satisfaction of City in accordance with the provisions of this Agreement prior to termination.

In the event of any termination, Consultant shall deliver to City all finished and/or unfinished documents, data, studies, surveys, drawings, maps, models, reports, photographs and/or any items prepared by Consultant in connection with this Agreement prior to Consultant receiving final payment.

The rights and remedies provided by this Agreement are cumulative, and the use of any one right or remedy by either party shall not preclude or waive its rights to use any or all other remedies. These rights and remedies are given in addition to any other rights the

parties may have by law, statute, ordinance, or otherwise.

ARTICLE 9
DISPUTE RESOLUTION/MEDIATION

In addition to all remedies at law, the parties may agree to attempt to resolve any controversy, claim or dispute arising out of or relating to the interpretation or performance of this Agreement, or breach thereof, by voluntary mediation to be conducted by a mutually acceptable mediator. However, if both parties do not agree to voluntarily mediate any such controversy, claim or dispute, mediation shall not be required.

ARTICLE 10
INDEMNITY

CONSULTANT SHALL RELEASE, DEFEND, INDEMNIFY AND HOLD HARMLESS CITY AND ITS CITY COUNCIL MEMBERS, OFFICERS, AGENTS, REPRESENTATIVES AND EMPLOYEES (COLLECTIVELY REFERRED TO AS "CITY" FOR PURPOSES OF THIS ARTICLE 10) FROM AND AGAINST ALL DAMAGES, INJURIES (WHETHER IN CONTRACT OR IN TORT, INCLUDING PERSONAL INJURY AND DEATH), CLAIMS, PROPERTY DAMAGES (INCLUDING LOSS OF USE), LOSSES, DEMANDS (REGARDLESS OF WHETHER THE ALLEGATIONS ARE FALSE, FRAUDULENT OR GROUNDLESS), SUITS, ACTIONS, JUDGMENTS, LIENS, COSTS AND EXPENSES, INCLUDING REASONABLE ATTORNEY'S FEES AND EXPENSES (INCLUDING ATTORNEY'S FEES AND EXPENSES INCURRED IN ENFORCING THIS ARTICLE 10), THAT IN WHOLE OR IN PART ARISE OUT OF OR ARE CONNECTED WITH, OR THAT ARE ALLEGED TO HAVE ARISEN OUT OF OR CONNECTED WITH, GOODS AND/OR SERVICES PROVIDED BY CONSULTANT, ITS OFFICERS, AGENTS, REPRESENTATIVES, EMPLOYEES, SUBCONTRACTORS, LICENSEES, INVITEES OR ANY OTHER THIRD PARTIES FOR WHOM CONSULTANT IS LEGALLY RESPONSIBLE (COLLECTIVELY REFERRED TO AS "CONSULTANT" FOR PURPOSES OF THIS ARTICLE 10) PURSUANT TO THIS AGREEMENT AND/OR THE NEGLIGENT, GROSSLY NEGLIGENT AND/OR INTENTIONAL WRONGFUL ACT AND/OR OMISSION OF CONSULTANT IN ITS/THEIR PERFORMANCE OF THIS AGREEMENT, REGARDLESS OF THE JOINT OR CONCURRENT NEGLIGENCE OR STRICT LIABILITY OF THE CITY (COLLECTIVELY, "CLAIMS"). THIS INDEMNIFICATION PROVISION AND THE USE OF THE TERM "CLAIMS" IS ALSO SPECIFICALLY INTENDED TO APPLY TO, BUT IS NOT LIMITED TO, ANY AND ALL CLAIMS, WHETHER CIVIL OR CRIMINAL, BROUGHT AGAINST CITY BY ANY GOVERNMENT AUTHORITY OR AGENCY RELATED TO ANY PERSON PROVIDING SERVICES UNDER THIS AGREEMENT THAT ARE BASED ON ANY FEDERAL IMMIGRATION LAW AND ANY AND ALL CLAIMS, DEMANDS, DAMAGES,

ACTIONS AND CAUSES OF ACTION OF EVERY KIND AND NATURE, KNOWN AND UNKNOWN, EXISTING OR CLAIMED TO EXIST, RELATING TO OR ARISING OUT OF ANY EMPLOYMENT RELATIONSHIP BETWEEN CONSULTANT AND ITS EMPLOYEES OR SUBCONTRACTORS AS A RESULT OF THAT SUBCONTRACTOR'S OR EMPLOYEE'S EMPLOYMENT AND/OR SEPARATION FROM EMPLOYMENT WITH THE CONSULTANT, INCLUDING BUT NOT LIMITED TO ANY DISCRIMINATION CLAIM BASED ON SEX, SEXUAL ORIENTATION OR PREFERENCE, RACE, RELIGION, COLOR, NATIONAL ORIGIN, AGE OR DISABILITY UNDER FEDERAL, STATE OR LOCAL LAW, RULE OR REGULATION, AND/OR ANY CLAIM FOR WRONGFUL TERMINATION, BACK PAY, FUTURE WAGE LOSS, OVERTIME PAY, EMPLOYEE BENEFITS, INJURY SUBJECT TO RELIEF UNDER THE WORKERS' COMPENSATION ACT OR WOULD BE SUBJECT TO RELIEF UNDER ANY POLICY FOR WORKERS COMPENSATION INSURANCE, AND ANY OTHER CLAIM, WHETHER IN TORT, CONTRACT OR OTHERWISE. CONSULTANT IS EXPRESSLY REQUIRED TO DEFEND CITY AGAINST ALL SUCH CLAIMS; PROVIDED, HOWEVER, THAT IF A COURT OF COMPETENT JURISDICTION SIGNS A JUDGMENT THAT BECOMES FINAL AND NON-APPEALABLE, DETERMINING THAT THE CITY (WITHOUT WAIVING ANY GOVERNMENTAL IMMUNITY) HAS JOINT, CONCURRENT OR SOLE NEGLIGENCE FOR THE CLAIMS IN ACCORDANCE WITH THE LAWS OF THE STATE OF TEXAS ("JUDGMENT"), THEN CONSULTANT IS NOT REQUIRED TO INDEMNIFY OR DEFEND CITY TO THE EXTENT OF THE NEGLIGENCE APPORTIONED TO CITY FOR EACH CAUSE(S) OF ACTION IDENTIFIED IN THE JUDGMENT. IN THE EVENT THE JUDGMENT PROVIDES THAT CITY IS JOINTLY, CONCURRENTLY OR SOLELY NEGLIGENT FOR THE CLAIMS REFERRED TO THEREIN, CITY AGREES TO REIMBURSE CONSULTANT FOR ALL REASONABLE AND NECESSARY COSTS INCURRED AND PAID BY CONSULTANT THAT ARE ATTRIBUTABLE TO CITY'S PERCENTAGE OF JOINT, CONCURRENT OR SOLE NEGLIGENCE, AS SET FORTH IN THE JUDGMENT, INCLUDING REASONABLE AND NECESSARY ATTORNEY'S FEES AND EXPENSES, WITHIN SIXTY (60) DAYS OF THE DATE THE JUDGMENT BECOMES FINAL AND NON-APPEALABLE. IF THIS AGREEMENT IS A CONTRACT FOR ENGINEERING OR ARCHITECTURAL SERVICES, THEN CONSULTANT'S INDEMNITY AND DEFENSE OBLIGATIONS UNDER THIS ARTICLE 10 ARE LIMITED BY, AND TO BE READ AS COMPLYING WITH, SECTION 271.904 OF THE TEXAS LOCAL GOVERNMENT CODE.

IN ITS SOLE DISCRETION, CITY SHALL HAVE THE RIGHT TO APPROVE OR SELECT DEFENSE COUNSEL TO BE RETAINED BY CONSULTANT IN FULFILLING ITS

OBLIGATION HEREUNDER TO DEFEND AND INDEMNIFY CITY, UNLESS SUCH RIGHT IS EXPRESSLY WAIVED BY CITY IN WRITING. CITY RESERVES THE RIGHT TO PROVIDE A PORTION OR ALL OF ITS OWN DEFENSE; HOWEVER, CITY IS UNDER NO OBLIGATION TO DO SO. ANY SUCH ACTION BY CITY IS NOT TO BE CONSTRUED AS A WAIVER OF CONSULTANT'S OBLIGATION TO DEFEND CITY OR AS A WAIVER OF CONSULTANT'S OBLIGATION TO INDEMNIFY CITY PURSUANT TO THIS AGREEMENT. CONSULTANT SHALL RETAIN CITY-APPROVED DEFENSE COUNSEL WITHIN SEVEN (7) BUSINESS DAYS OF CITY'S WRITTEN NOTICE THAT CITY IS INVOKING ITS RIGHT TO DEFENSE OR INDEMNIFICATION UNDER THIS AGREEMENT. IF CONSULTANT FAILS TO RETAIN COUNSEL WITHIN SUCH TIME PERIOD, CITY SHALL HAVE THE RIGHT TO RETAIN DEFENSE COUNSEL ON ITS OWN BEHALF, AND CONSULTANT SHALL BE LIABLE FOR ALL COSTS INCURRED BY CITY. THE RIGHTS AND OBLIGATIONS CREATED BY THIS ARTICLE SHALL SURVIVE TERMINATION OF THIS AGREEMENT.

ARTICLE 11
NOTICES

Any notice provided or permitted to be given under this Agreement must be in writing and may be served by depositing the same in the United States Mail, addressed to the party to be notified, postage pre-paid and registered or certified with return receipt requested; by facsimile; by electronic mail, with documentation evidencing the addressee's receipt thereof; or by delivering the same in person to such party a via hand-delivery service, or any courier service that provides a return receipt showing the date of actual delivery of same to the addressee thereof. Notice given in accordance herewith shall be effective upon receipt at the address of the addressee. For purposes of notification, the addresses of the parties shall be as follows:

If to City, addressed to:

Wayne E. Lee, P.E., CFM
Director of Engineering
City of Sherman
220 W Mulberry St.
Sherman, TX 75091
Telephone: (903) 892-7327
Email: waynel@cityofsherman.com

With a copy to:

Abernathy, Roeder, Boyd & Hullett, P.C.
Attention: Ryan D. Pittman
1700 Redbud Blvd., Suite 300
McKinney, Texas 75069
Telephone: (214) 544-4000

Facsimile: (214) 544-4054
Email: rpittman@abernathy-law.com

If to Consultant, addressed to:

Shawn W. Keough

Senior Vice President
Wade Trim, Inc.
25251 Northline Road
Taylor, Michigan 48180
Telephone: (734) 947-2622
Email: skeough@wadetrim.com

ARTICLE 12
MISCELLANEOUS

12.1 **Complete Agreement** – This Agreement, including the exhibits hereto labeled "A" through "F," all of which are incorporated herein for all purposes, constitute the entire Agreement by and between the parties regarding the subject matter hereof and supersedes all prior and/or contemporaneous written and/or oral understandings. This Agreement may not be amended, supplemented, and/or modified except by written agreement duly executed by both parties. The following exhibits are attached below and made a part of this Agreement:

12.1.1 **Exhibit A**, Scope of Services.

12.1.2 **Exhibit B**, Project Engineering Budget Summary.

12.1.3 **Exhibit C**, Guidelines for Computer Aided Design and Drafting (CADD).

12.1.4 **Exhibit D**, Guidelines for Direct Expenses; General and Administrative Markup; Travel and Subsistence Expenses.

12.1.5 **Exhibit E**, Contractor Insurance Guidelines.

12.1.6 **Exhibit F**, Conflict of Interest Questionnaire, Form CIQ.

To the extent that **Exhibit A**, **Exhibit B**, **Exhibit C**, **Exhibit D**, **Exhibit E**, or **Exhibit F** are in conflict with provisions of this Agreement or each other, the provisions of this Agreement, then the provisions of **Exhibit B**, **Exhibit C**, **Exhibit D**, **Exhibit E**, **Exhibit F** or **Exhibit A** shall prevail in that order.

12.2 **Assignment and Subletting** – Consultant agrees that neither this Agreement nor the work to be performed hereunder will be assigned or sublet without the prior written consent of City. Consultant further agrees that the assignment or subletting of any portion or feature of the work or materials required in the performance of this Agreement shall not relieve Consultant of its full obligations to City as provided by this Agreement. All such approved work performed by assignment or subletting shall be billed through Consultant, and there shall be no third party billing.

12.3 **Attorney's Fees** – If either party files any action or brings any proceeding against the other arising from this Agreement, then as between City and Consultant, the prevailing party shall be entitled to recover as an element of its costs of suit, and not as damages, reasonable and necessary attorneys' fees and litigation expenses both at trial and on appeal, subject to the limitations set forth in TEX. LOC. GOV'T CODE § 271.153, as it exists or may be amended, if applicable.

12.4 **Successors and Assigns** – City and Consultant, and their respective partners, assigns, successors, subcontractors, executors, officers, agents, employees,

representatives and administrators are hereby bound to the terms and conditions of this Agreement.

12.5 **Savings/Severability** – In the event of a term, condition, or provision of this Agreement is determined to be invalid, illegal, void, unenforceable, or unlawful by a court of competent jurisdiction, then that term, condition, or provision, shall be deleted and the remainder of the Agreement shall remain in full force and effect as if such invalid, illegal, void, unenforceable or unlawful provision had never been contained in this Agreement.

12.6 **Governing Law/Venue** – This Agreement shall be governed by and construed in accordance with the laws of the State of Texas, without regard to conflict of law principles. The exclusive venue for any action arising out of this Agreement shall be a court of appropriate jurisdiction in Grayson County, Texas.

12.7 **Execution/Consideration** – This Agreement is executed by the parties hereto without coercion or duress for any substantial consideration, the sufficiency of which is forever confessed.

12.8 **Authority** – The individuals executing this Agreement on behalf of the respective parties below represent to each other that all appropriate and necessary action has been taken to authorize the individual who is executing this Agreement to do so for and on behalf of the party for which his or her signature appears, that there are no other parties or entities required to execute this Agreement in order for the same to be an authorized and binding agreement on the other party for whom the individual is signing this Agreement and that each individual affixing his or her signature hereto is authorized to do so, and such authorization is valid and effective on the date hereof.

12.9 **Waiver** – Waiver by either party of any breach of this Agreement, or the failure of either party to enforce any of the provisions of this Agreement, at any time, shall not in any way affect, limit, or waive such party's right thereafter to enforce and compel strict compliance.

12.10 **Headings** – The headings of the various sections of this Agreement are included solely for convenience of reference and are not to be full or accurate descriptions of the content thereof.

12.11 **Multiple Counterparts** – This Agreement may be executed in a number of identical counterparts, each of which shall be deemed an original for all purposes. An electronic mail and/or facsimile signature will also be deemed to constitute an original if properly executed and delivered to the other party.

12.12 **Immunity** – It is expressly understood and agreed that, in the execution and performance of this Agreement, City has not waived, nor shall be deemed to have

waived, any immunity, governmental, sovereign and/or official, or defense that is available to it against claims arising in the exercise of governmental powers and functions. By entering into this Agreement, the parties do not create any obligations, express or implied, other than those set forth in this Agreement.

12.13 **Incorporation of Recitals** – The representations, covenants and recitations set forth in the foregoing recitals of this Agreement are true and correct and are incorporated into the body of this Agreement and adopted as findings of City and the authorized representative of Consultant.

12.14 **Additional Representations** – Each signatory represents this Agreement has been read by the party for which this Agreement is executed and that such party has had the opportunity to confer with its counsel.

12.15 **Miscellaneous Drafting Provisions** – This Agreement shall be deemed drafted equally by all parties hereto. The language of all parts of this Agreement shall be construed as a whole according to its fair meaning, and any presumption or principle that the language herein is to be construed against any party shall not apply.

12.16 **No Third-Party Beneficiaries** – Nothing in this Agreement shall be construed to create any right in any third party not a signatory to this Agreement, and the parties do not intend to create any third party beneficiaries by entering into this Agreement.

12.17 **Indemnity** – The parties agree that the Indemnity provision set forth in Article 10 of this Agreement is conspicuous and the parties have read and understood the same.

12.18 **Representations** – All representations and covenants made by one party to the other in this Agreement or in any certificate or other instrument delivered by one party to the other under this Agreement shall be considered to have been relied upon by the other party and will survive the satisfaction of any fees under this Agreement, regardless of any investigation made by either party.

12.19 **Independent Contractor** – In performing this Agreement, Consultant shall act as an independent contractor with respect to City. In no event shall this Agreement be construed as establishing a partnership, joint venture or similar relationship between the parties and nothing herein shall authorize either party to act as agent for the other. Consultant shall be liable for its own debts, obligations, acts and omissions, including the payment of all required withholding, social security and other taxes and benefits with respect to all of Consultant's officers, directors, partners, employees and representatives, who shall not be considered City employees and shall not be eligible for any employee benefit plan offered by City.

12.20 **Debarment/Suspension** – City is prohibited from making any award or permitting any award at any tier to any party which is debarred or suspended or otherwise excluded from or ineligible for participation in federal assistance programs under Executive Order 12549, Debarment and Suspension. City, Consultant and Consultant's subcontractors shall comply with federal and state regulations regarding debarment and suspension. Consultant shall include a statement of compliance with federal and state debarment and suspension regulations in all third-party agreements for work on the Project.

12.21 **Restrictions on Lobbying** – City and Consultant are prohibited from using funds awarded under the Agreement for lobbying purposes. Consultant shall include a statement of compliance with this provision in applicable procurement solicitations and third-Party agreements for work on the Project.

12.22 **Appropriation of Funds** – Funds are not presently budgeted for City's performance under this Agreement beyond the end of City's current fiscal year. City will give Consultant sixty (60) days' notice if funds for City's performance are not budgeted to continue beyond that time. City shall have no liability for payment of any money for services performed after the end of City's current fiscal year unless and until such funds are budgeted.

12.23 **Certifications Required by Texas Law** – In accordance with Chapter 2270 of the Texas Government Code (to the extent applicable), Consultant hereby certifies that Consultant does not boycott Israel and will not boycott Israel during the term of any contract with City, including during the term of this Agreement. In accordance with Chapter 809 of the Texas Government Code (to the extent applicable), Consultant hereby certifies that Consultant does not boycott energy companies and will not boycott energy companies during the term of any contract with City, including during the term of this Agreement. In accordance with Chapter 2274 of the Texas Government Code (to the extent applicable), Consultant hereby certifies that Consultant does not have a practice, policy, guidance or directive that discriminates against a firearm entity or firearm trade association and will not discriminate against a firearm entity or firearm trade association during the term of any contract with City, including during the term of this Agreement. The foregoing terms have the meanings ascribed to them in the referenced statutes if defined therein.

12.24 **Reference to Consultant** – When referring to "Consultant," this Agreement shall refer to and be binding upon Consultant, and its officers, directors, partners, employees, representatives, contractors, subcontractors, licensees, invitees, agents, successors, assignees (as authorized herein), vendors, grantees, trustees, legal representatives and/or any other third parties for whom Consultant is legally responsible.

12.25 **Reference to City** – When referring to "City," this Agreement shall refer to and be binding upon City, its Council members, officers, agents, representatives, employees and/or any other authorized third parties for whom City is legally responsible.

IN WITNESS WHEREOF, the parties have executed this Agreement and caused this Agreement to be effective on the date set forth in the introductory clause of this Agreement.

CITY:

City of Sherman, Texas,
a Texas home-rule municipality

By: _____
Robby Hefton, City Manager

CONSULTANT:

Wade Trim, Inc.
a Michigan corporation

By: _____
Shawn W. Keough
Senior Vice President

APPROVED AS TO FORM:

_____
Abernathy, Roeder, Boyd & Hullett, P.C.
Ryan D. Pittman, City Attorneys

STATE OF TEXAS §
§
COUNTY OF Tarrant §

BEFORE ME, THE UNDERSIGNED AUTHORITY, ON THIS DAY PERSONALLY APPEARED **SHAWN W. KEOUGH**, KNOWN TO ME TO BE ONE OF THE PERSONS WHOSE NAMES ARE SUBSCRIBED TO THE FOREGOING INSTRUMENT; HE ACKNOWLEDGED TO ME THAT HE IS THE PRESIDENT AND DULY AUTHORIZED REPRESENTATIVE FOR **WADE TRIM, INC.**, AND THAT HE EXECUTED SAID INSTRUMENT FOR THE PURPOSES AND CONSIDERATION THEREIN EXPRESSED.

GIVEN UNDER MY HAND AND SEAL OF OFFICE THIS 02 DAY OF April 2024.

Amanda M Torres
NOTARY PUBLIC IN AND FOR THE STATE OF TEXAS
My commission expires: May 30, 2027

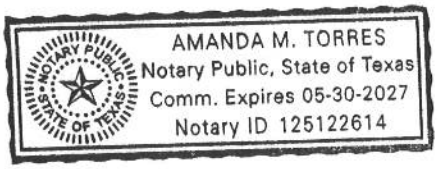

I. PROJECT DESCRIPTION

The City of Sherman has requested the Consultant provide professional engineering, surveying, and geotechnical services for the extension of Wells Street. Currently, Wells Street dead ends approximately 130 LF east of the Patricia Drive intersection. The existing cross section is 31 feet back of curb to back of curb, 60-foot right-of-way and no sidewalk along this specific section. Due to recent development east of the dead end, the City has recognized the need to extend Wells Street across the unnamed creek and allow additional access to Valentine Drive and remove the dead end. This portion of the extension will also allow for vehicles such as sanitation trucks and fire trucks to have better access to this area. Segment One, includes the full design, and preparation of construction plans, specifications, and opinion of probable construction cost (OPCC), for the Wells Street extension between Patricia Drive and Valentine. This segment includes approximately 370 LF of roadway, enclosed storm sewer, sidewalk, barrier free ramps, culvert(s) for creek crossing and minor utility adjustments.

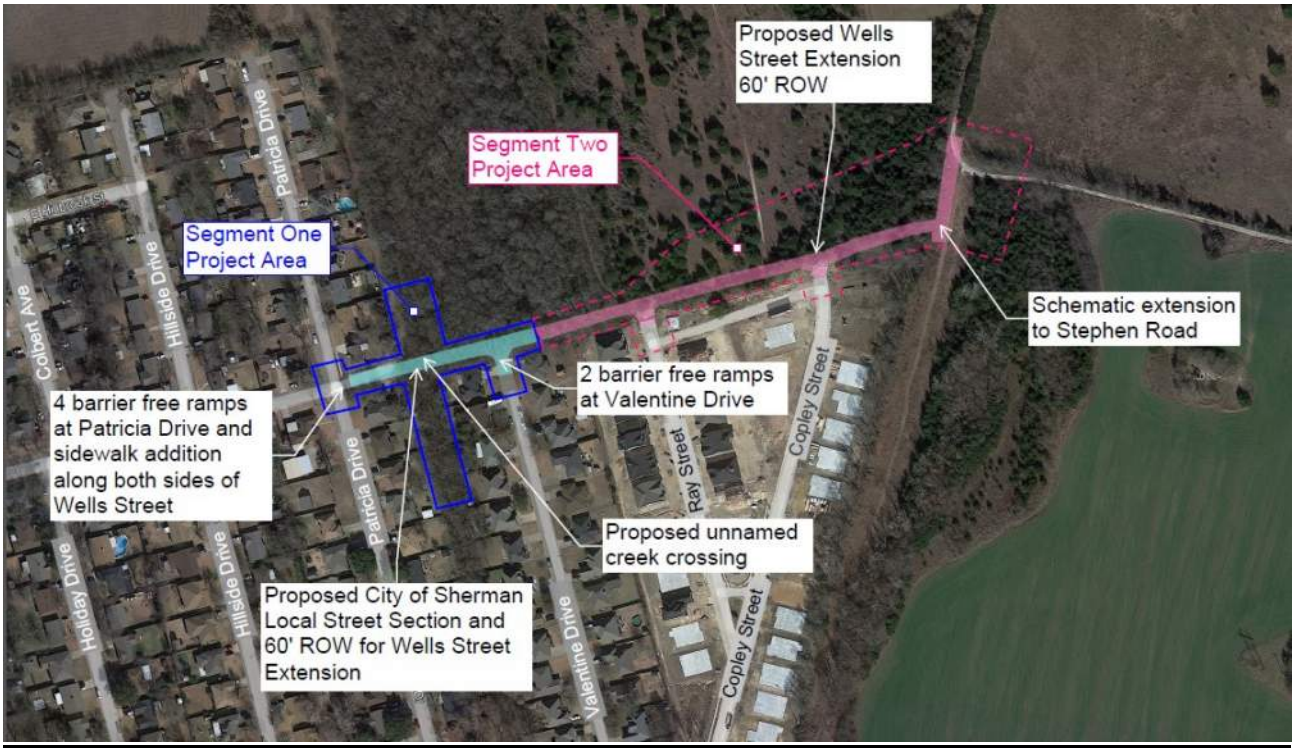

Figure 1: Project Area

Segment Two, includes the extension of Wells Street across the undeveloped area between Valentine Drive and Copley Street and extending to Stephens Road. This segment will include a schematic design for future development. For the schematic design, only a roadway plan and profile and preliminary OPCC will be designed at this time for the approximately 1,000 LF segment.

II. GENERAL REQUIREMENTS

A. Specific design requirements shall be obtained from the City of Sherman Engineering Design Standards. Consultant will establish and summarize design criteria. The design criteria will be reviewed by the City for approval prior to beginning design work.

B. Consultant shall coordinate with franchise utilities, and City of Sherman which has facilities within or adjacent to the Project.

C. Each time the Consultant submits plans and/or specifications to City, one(1) copy (as well as PDF version) of each shall be submitted, unless otherwise instructed. These shall be reviewed and checked by City and returned to Consultant for corrections. When the corrected copies of the plans and specifications are returned to City, the original and reviewed plans and specifications shall also be returned to City. The plans, specifications, documents, provisions, attachments, and correspondence provided in accordance with this contract shall be dated.

D. The Consultant shall submit a monthly report outlining, at a minimum, the work on the project which occurred the previous month, the work expected to be completed the following month, the next major project milestone, and any information needed from the City. The report is to be submitted with monthly invoice.

E. Communications and Reporting:

i Attend a pre-design project kickoff meeting with City staff to confirm and clarify scope, understand City objectives, and ensure economical and functional designs meet City requirements.

ii Attend review meeting, in-person, with the City at the end of each design phase.

iii Prepare and submit monthly invoices in the format acceptable to the City.

iv Prepare and submit monthly progress reports.

v Prepare and submit baseline Project Schedule initially, Project Schedule updates, and updated Opinion of Probable Construction Cost with each plan submittal.

vi Coordinate with other agencies and entities as necessary and required for the design of the proposed infrastructure and provide and obtain information needed to prepare the design. For this Project, the Consultant anticipates only need minor coordination with franchise utilities.

vii With respect to coordination with permitting authorities, Consultant shall communicate with permitting authorities such that their regulatory requirements are appropriately reflected in the designs. Consultant shall work with regulatory authorities to obtain approval of the designs and make changes necessary to meet their requirements. For this project,

the Consultant does not anticipate needing permits.

viii Attend up to two (2) additional project coordination meetings, if needed.

III. TASK SUMMARY, BASIC SERVICES

A. Project Management

a. PROJECT MANAGEMENT: This task includes:
   i. This task includes project management functions including preparing for project meetings with the City and design team, invoicing, scheduling, communication, and monthly reporting (as stated in the General Requirements section).
   ii. Collect and review existing data such as record drawings, utility GIS data, and other information provided by the City.
   iii. This task includes printing and reproduction expenses and direct expenses such as travel mileage for site visits and project meetings.
   iv. The Consultant will coordinate with franchise utility companies for assets located in project area. The franchise utilities will be directly contacted by the project team through the design phase to determine approximate horizontal location of utilities.

B. Preliminary Design Plans (30%) – Segment 1

a. PRELIMARY DESIGN (30% SUBMITTAL): This task includes the conceptual design of segment one (Patricia Drive to Valentine Drive) which is approximately 370 LF. During the preliminary design, a roadway plan and profile, drainage calculations (assuming the rational method), water stub out across the roadway, will be developed for segment one as well as. An Autodesk Storm and Sanitary (SSA) model will be developed for the enclosed drainage system. Either an Autodesk SSA model or HEC-RAS model will be developed to determine the unnamed creek flow. Additionally, the Consultant will inspect the manhole northeast of the dead end on Wells Street, if the existing manhole is brick, a proposed replacement (i.e., precast or cast-in-place) will be indicated on the Utility Plan Sheet.
   i. The Preliminary Design construction plan package will include:
      - Cover Sheet
      - General Notes Sheet
      - Quantity Summary Sheet
      - Project Control Sheet – The following information shall be indicated for each Control Point: identification, description, and X, Y and Z Coordinates in the City's standard coordinate system.
      - Existing Utility Sheet – Water, sanitary sewer, and storm drains will be shown on the plans based on field information and surveys collected by the Consultant and from existing "Record Drawings"

provided by the City of Sherman. Other utilities should be shown on the plans based on field information and surveys collected by the Consultant, utility locates requested by the Consultant, and any available "Record Drawings" that the Consultant can obtain from other utilities.

- Removal Plan Sheet
- Typical Section Sheet – This sheet will include existing and proposed typical roadway sections. Two (2) existing sections, one of the asphalt roadways and one of the existing terrain. One ultimate section of concrete with sidewalks.
- Roadway Plan and Profile Sheet – This sheet will include a plan and profile view of the proposed roadway as well as grading and spot elevations needed for construction.
- Detailed Barrier Free Ramp Sheet(s) – This sheet will include detailed grading for six barrier free ramps.
- Drainage Area Map with Runoff Calculations Sheet
- Drainage Calculations Sheet
- Culvert Plan and Profile Sheet
- Storm Sewer System Plan and Profile Sheet (assuming 2 sheets)
- Utility Plan Sheet – This sheet will include the water main stub out to cross the proposed Wells Street with associated fire hydrant and brick sanitary sewer manhole replacements, if necessary.
- Preliminary Roadway Cross Section Sheets (assuming 3 sheets) – These sheets will include cross sections every 25 feet which is approximately fifteen (15) cross sections.

ii. Quality Assurance/ Quality Control (QA/QC) Review
iii. Opinion of Probable Construction Cost (OPCC)
iv. Deliverables include:
    - One (1) copy of the half-sized (11"x17") Conceptual Design Construction Plans
    - One (1) copy of the Conceptual Design Opinion of Probable Construction Cost (OPCC)
    - PDF of the Conceptual Design Construction Plans and OPCC
v. Meet with the City, in person, to review the 30% submittal.

C. Intermediate Design Plans (60%) – Segment 1

a. INTERMEDIATE DESIGN (60% SUBMITTAL): Upon approval of the 30% Design, the following will be completed:
    i. The City's comments will be addressed from the 30% review.
    ii. The Intermediate Design construction plan package will include:
        - Cover Sheet

- General Notes Sheet
- Quantity Summary Sheet
- Project Control Sheet – The following information shall be indicated for each Control Point: identification, description, and X, Y and Z Coordinates in the City's standard coordinate system.
- Traffic Control Plan Sheet
- Erosion Control Plan Sheet
- Removal Plan Sheet
- Typical Section Sheet – This sheet will include existing and proposed typical roadway sections.
- Roadway Plan and Profile Sheet – This sheet will include a plan and profile view of the proposed roadway as well as grading and spot elevations needed for construction.
- Detailed Barrier Free Ramp Sheet(s) – This sheet will include detailed grading for six barrier free ramps.
- Drainage Area Map with Runoff Calculations Sheet
- Drainage Calculations Sheet
- Culvert Plan and Profile Sheet
- Storm Sewer System Plan and Profile Sheet (assuming 2 sheets)
- Utility Plan Sheet – This sheet will include the water main stub out to cross the proposed Wells Street with associated fire hydrant and brick sanitary sewer manhole replacements, if necessary.
- Roadway Cross Section Sheets (assuming 3 sheets) – These sheets will include cross sections every 25 feet which is approximately fifteen (15) cross sections. Cross-sections to have cut/fill table on each cross-section.
- Applicable construction details (TxDOT and City of Sherman) Sheets
- Up to four (4) special details

iii. The Intermediate Design Technical Specifications
iv. Quality Assurance/ Quality Control (QA/QC) Review
v. Constructability Review
vi. Preliminary Design Opinion of Probable Construction Cost (OPCC)
vii. Deliverables include:

- One (1) copy of the half-sized (11"x17") Preliminary Design Construction Plans
- One (1) copy of the Preliminary Design Technical Specifications
- One (1) copy of the Preliminary Design Opinion of Probable Construction Cost (OPCC)
- PDF of the Preliminary Design Construction Plans, Technical Specifications and OPCC

ii. Meet with the City, in person, to review the 60% submittal.

D. Final Design/Construction Plans (90%, 100%) – Segment 1

a. PRE-FINAL & FINAL DESIGN (90% & 100% SUBMITTALS): Upon approval of the 60% Design, the following will be completed:

i. The City's comments will be addressed from the 60% and 90% review, respectively. Final Design (100%) Submittal is intended to have addressed the City comments and be used for Bid.

ii. The Pre-Final and Final Design construction plan packages will include:

- Cover Sheet
- General Notes Sheet
- Quantity Summary Sheet
- Project Control Sheet – The following information shall be indicated for each Control Point: identification, description, and X, Y and Z Coordinates in the City's standard coordinate system.
- Traffic Control Plan Sheet
- Erosion Control Plan Sheet
- Removal Plan Sheet
- Typical Section Sheet – This sheet will include existing and proposed typical roadway sections.
- Roadway Plan and Profile Sheet – This sheet will include a plan and profile view of the proposed roadway as well as grading and spot elevations needed for construction.
- Detailed Barrier Free Ramp Sheet(s) – This sheet will include detailed grading for six barrier free ramps.
- Drainage Area Map with Runoff Calculations Sheet
- Drainage Calculations Sheet
- Culvert Plan and Profile Sheet
- Storm Sewer System Plan and Profile Sheet (assuming 2 sheets)
- Utility Plan Sheet – This sheet will include the water main stub out to cross the proposed Wells Street with associated fire hydrant and brick sanitary sewer manhole replacements, if necessary.
- Roadway Cross Section Sheets (assuming 3 sheets) – These sheets will include cross sections every 25 feet which is approximately fifteen (15) cross sections. Cross-sections to have cut/fill table on each cross-section.
- Applicable construction details (TxDOT and City of Sherman) Sheets
- Up to four (4) special details

iii. The Pre-Final and Final Design technical specifications

- The Consultant will complete the proposal for the front-end documents for the Final Design submittal. The other front-end

documents will be provided by the Owner for incorporation into the document.

iv. Quality Assurance/ Quality Control (QA/QC) Review at both 90% and 100% submittals.
v. Pre-Final and Final Design Opinion of Probable Construction Cost (OPCC)
vi. Deliverables include:
- PDF of the Pre-Final Design Construction Plans, Technical Specifications and OPCC.
- Two (2) copies of the half-sized (11”x17”) Final Design Construction Plans
- Two (2) copies of the Final Design Technical Specifications
- Two (2) copies of the Final Design Opinion of Probable Construction Cost (OPCC)
- PDF of the Final Design Construction Plans, Technical Specifications and OPCC.

vii. Meet with the City, in person, to review the 90% and 100% submittals.

E. Schematic Design – Segment 2

a. SCHEMATIC DESIGN: This task includes the schematic design of segment two (Valentine Drive to Stephens Road) which is approximately 1,000 LF. This task is intended to run concurrently with design of segment one. The roadway plan, profile and typical section(s) will be developed for the intent of future construction plan development.
   i. Deliverables include:
   - PDF of the plan, profile, and typical section for segment two
   - Package and submit CAD base files.

F. Bid Phase Services

a. BID PHASE SERVICES: This task includes:
   i. Assist the City in the advertisement of the Project for competitive bids.
   ii. Assist the City with any Pre-Bid meeting.
   iii. Prepare addenda as appropriate to interpret, clarify, or expand the Bid Documents.
   iv. Assist the City in the Bid Opening.
   v. Prepare tabulation of bids for construction of the Project.
   vi. Prepare a recommendation award letter for the construction of the Project. In preparing the letter, contractor references will be contacted, and a summary of the checked references will be provided.
   vii. Assist in the preparation of the formal Construction Contract Documents (also known as conformed documents), provide four (4) copies of contracts

to be executed by the contractor, and coordinate their execution by the respective parties.

viii. Deliverables include:
- PDF of bid tabulation
- PDF of recommendation award letter
- Four (4) copies of the Construction Contract Documents including conformed construction plans and specifications.

G. Construction Phase Services

a. CONSTRUCTION PHASE SERVICES: This task includes:
   i. Up to eight (8) Site Visits upon request
   ii. Pre-Construction Meeting – Attend Pre-Construction Meeting prior to commencement of Work at the Site.
   iii. Franchise Utility Coordination – Assist the City with franchise utility coordination efforts and conflict resolution during construction.
   iv. Requests for information (RFI) – Coordinate with Engineer and issue clarifications and interpretations of the Contract Documents to City as appropriate to the orderly completion of Contractor's work. Such clarifications and interpretations will be consistent with the intent of the Contract Documents. Field Orders authorizing variations from the requirements of the Contract Documents will be made by City.
   v. Shop Drawings, Samples, and Submittals – Review up to eight (8) submittals and approve or take other appropriate action in respect to Shop Drawings, Samples, Submittals, and other data which Contractor is required to submit, but only for conformance with the information given in the Contract Documents and compatibility with the design concept of the completed Project as a functioning whole as indicated in the Contract Documents. Such review and approvals or other action will not extend to means, methods, techniques, equipment choice and usage, sequences, schedules, or procedures of construction or to related safety precautions and programs.
   vi. Substitutes and "or-equal" – Evaluate and determine the acceptability of substitute or "or-equal" materials and equipment proposed by Contractor in accordance with the Contract Documents, but subject to the provisions of applicable standards of state or local government entities.
   vii. Disagreements between City and Contractor – As necessary, render written decision on claims of City and Contractor relating to the acceptability of Contractor's work or the interpretation of the requirements of the Contract Documents pertaining to the progress of Contractor's work. In rendering such decisions, Consultant shall be fair and not show partiality to City or Contractor and shall not be liable in connection with any decision rendered in good faith in such capacity.

viii. Limitation of Responsibilities – Consultant shall not be responsible for the acts or omissions of any Contractor, or of any of their subcontractors, suppliers, or of any other individual or entity performing or furnishing the Work. Consultant shall not have the authority or responsibility to stop the work of any Contractor.

ix. Deliverables include:
- Package and submit CAD base files upon request.

b. For the completion of this project, the following task will be completed:
   i. one (1) site visit for final inspection, at the request of the City.
   ii. The Consultant shall prepare construction Record Drawings based on the information received from Contractor within 30 days of final completion in accordance with the Agreement.
   iii. Deliverables include:
   - PDF of the Record Drawings
   - Package and submit CAD base files.

II. Special Services

a. Various services incidental to the project, but not within the scope of the Basic Engineering Services covered by A., B., C., D., E., F., and G. preceding, which may be performed or arranged for separately by City, or may be added to the Consultant's responsibilities by mutual agreement and written authorization include but are not necessarily limited to the following:
   i. Right-of-Way Dedication Documents
   - RIGHT-OF-WAY DEDICATION DOCUMENTS: Provide right of way dedication documents and a legal description and survey exhibit on 8.5”x11” letter size title block for the anticipated right-of-way purchase for the proposed Wells Street extension. This survey will be consistent with the requirements of a Category 1B, Condition III Standard Land Survey according to the TSPS Manual of Practice, effective date: September 1, 2019.
   - Prepare right of way documents for the proposed Wells Street extension.
   - Prepare ONE (1) legal description and exhibits for right-of-way tied to boundary of parcel(s).
   - Set corners of proposed right-of-way.
   - Owner will provide front end/conveyance language and signatures and will record the final document.
   - Deliverables include signed PDF documents.

   ii. Drainage/Construction Easement Documents
   - DRAINAGE/CONSTRUCTION EASEMENT DOCUMENTS: Provide a legal description and survey exhibit document on 8.5”x11” letter-

size title block for up to TWO (2) proposed easements and a metes and bounds descriptions. The easements are anticipated to be located near the creek's crossing with the proposed Wells St. alignment. The draft exhibit will be sent to the City for approval and comment. Once approved by the parties, the final easement corners and stakes will be set, as needed.

- Deliverables include signed PDF documents.

iii. Design Survey – Segment 1

- Preliminary Boundary Research, & Deed Sketch
  - RESEARCH EXISTING PUBLIC RECORDS: Obtain subject and adjacent easements, right of ways, subdivision plats, boundary surveys, deeds, and other similar documents from public records.
  - BOUNDARY/RIGHT-OF-WAY SKETCH: Prepare boundary sketch in AutoCAD 2020 or later, of record information obtained by research of public records. Label the parcels, easements, and public ROWs with the appropriate ownership and record of ownership.
  - Deliverables include Digital CAD file containing parcel linework and ownership information.
- Right of Entry/Access Coordination
  - RIGHT OF ENTRY/ACCESS: Identify, produce, and obtaining written Rights of Entry (ROE) from current landowners, private and public, where necessary. A draft of the right of entry document will be sent to the City for review prior to distribution. Approximately eight properties have been identified.
  - Deliverables include right of entry letters and documentation of coordination.
- Design Topographic Survey Phase – Segment 1
  - TIES: Establish ties to found ROW, easement, and property monuments to the horizontal control. Tie the secondary control points back to the primary control points.
  - HORIZONTAL AND VERTICAL CONTROL: Establish horizontal and vertical control. The horizontal project data will be based upon the Texas State Plane Coordinate System, North Central Zone, North American Datum of 1983 (NAD 83). The vertical data will be based upon the national Geodetic Vertical Datum of 1988. The horizontal coordinates will be represented as surface coordinates with a surface to grid combined scale factor. Establish a minimum of three (3) horizontal and vertical control points.

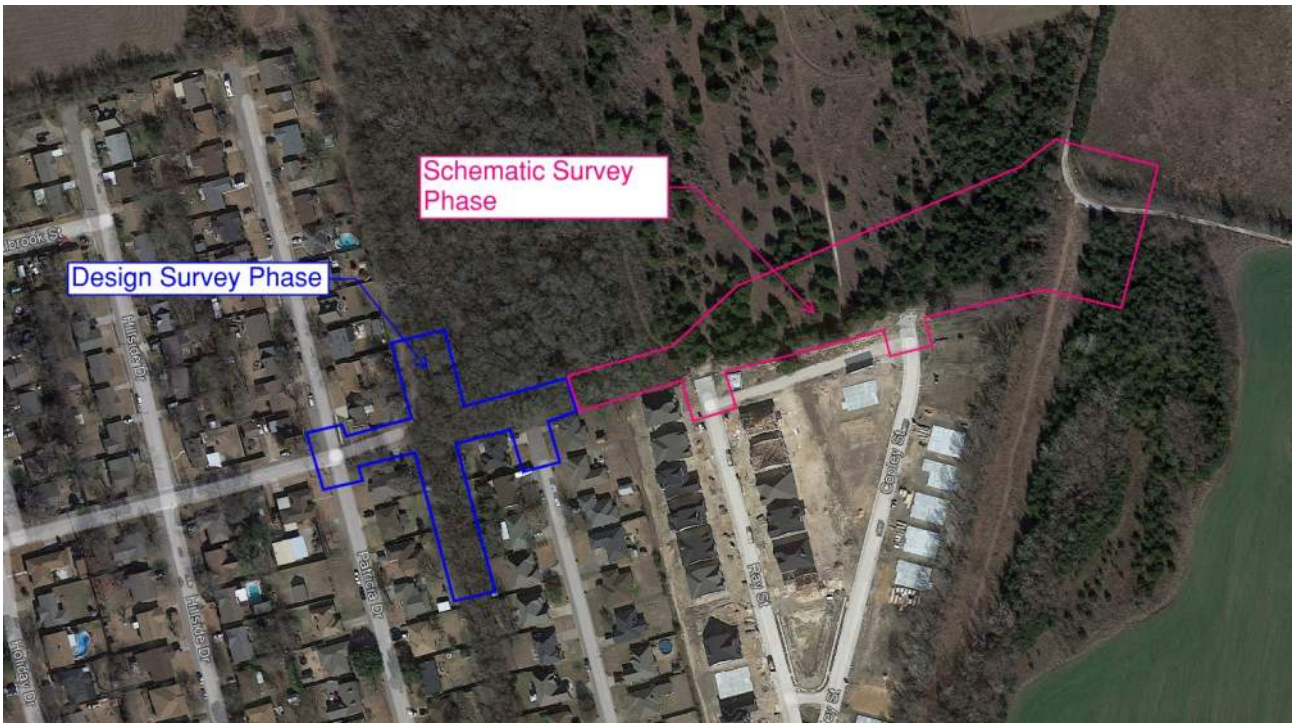

Figure 2: Wells Street Design Survey Phase for Segment One (Patricia Street to Valentine Drive) and the Schematic Survey Phase for Segment Two (Valentine Drive to Stephens Road).

- BENCHMARKS: Establish benchmarks within 200 feet of the beginning and end of the project. Establish additional benchmarks along the alignment at intervals that do not exceed 1,000 feet. Benchmarks shall be documented and retraceable (i.e., nail in trees are not acceptable)
- CONTACT DIGTESS: Provide Dig-Tess (Texas 811) information for instruction to locate existing private utilities in the project area. Prepare utilities sketch in AutoCAD 2020 or later, of franchise and public utilities within project area.
- DESIGN PHASE TOPOGRAPHIC FEATURES: Provide horizontal and vertical locations of topographic features 45 feet on both sides of the proposed roadway alignment from the intersection of Patricia Street and Wells Street to Valentine Drive (Segment 1), 50 foot upstream and 100 foot downstream on the creek. Provide a Civil 3D 2020 file or XML file with topographic features and a topographic surface. The topographic features that shall be located include but are not limited to:
    - Provide ground shots at a minimum of 25 feet on either side of the proposed alignment at 50’ intervals to provide one (1) foot contours.

- Other significant grade breaks (walls, ramps, ground slope changes, etc.)
- Fire hydrants, water meters, valves, and blow offs (Provide rim elevations and top nut measure downs for valves).
- Gas meters and valves.
- Power poles, overhead electric lines, telephone, and electrical pedestals.
- Storm Sewer inlets, manholes, and junction boxes with flow-line elevations, rim elevations, size, depth, and type.
- Wastewater manholes with flow-line elevations, cleanouts, rim elevations, size, depth, and type.
- Identify drainage channels, ditches, and swales. Identify culvert sizes and flow lines.
- Show channel/ditch/creek features, including top of bank, high bank, side slopes, berms, center line of creek and back-slope interceptors. Show limits of riprap and slope paving.
- Identify brush or tree lines, and tree types and sizes. Comply with local agency requirements for sizes of trees that must be identified. Identify size, specie and location of individual specimen trees and perimeter location of heavy brush areas.
- Locate visible indications of utilities (gas mains, electric, telephone, cable TV, communication fiber optics, etc.). Locate ROW markers and pipeline markers (provide information from pipeline marker sign).
- Roadway features: driveway/ground, back of sidewalk, front of sidewalk, back of curb, gutter, edge of concrete, edge of asphalt, crown of street, mailboxes, signs, and landscaping.
- Locate/verify existing property monuments to establish right-of-way and property lines suitable for engineering design. (Not a boundary survey)
- Cross sections of the unnamed creek every 25 feet along the creek. Cross sections will go from bank to bank (overbanks will be shot as part of the topo already) and will include toes of slopes and creek flowlines plus other significant grade breaks/benching.

- Deliverables include digital 3D CAD file of topographic survey.

- The Design Survey Phase (Segment 1) and the Schematic Survey Phase (Segment 2) will be performed concurrently.

iv. Schematic Survey Phase - Segment 2

- TIES: Establish ties to found ROW, easement, and property monuments to the horizontal control. Tie the secondary control points back to the primary control points.
- HORIZONTAL AND VERTICAL CONTROL: Establish horizontal and vertical control. The horizontal project data will be based upon the Texas State Plane Coordinate System, North Central Zone, North American Datum of 1983 (NAD 83). The vertical data will be based upon the national Geodetic Vertical Datum of 1988. The horizontal coordinates will be represented as surface coordinates with a surface to grid combined scale factor. Establish a minimum of three (3) horizontal and vertical control points.
- BENCHMARKS: Establish benchmarks within 200 feet of the beginning and end of the project. Establish additional benchmarks along the alignment at intervals that do not exceed 1,000 feet. Benchmarks shall be documented and retraceable (i.e., nail in trees are not acceptable).
- CONTACT DIGTESS/ONECALL: Provide Dig-Tess (Texas 811) information for instruction to locate existing private utilities in the project area. Prepare utilities sketch in AutoCAD 2020 or later, of franchise and public utilities within project area.
- SCHEMATIC PHASE TOPOGRAPHIC FEATURES: Provide horizontal and vertical locations of topographic features 45 feet on both sides of the proposed roadway alignment from the intersection of Valentine Drive and Copley Street and extending Stephens Road. Provide a Civil 3D 2020 file or XML file with topographic features and a topographic surface. The topographic features that shall be located include but are not limited to:
    - Provide ground shots at a minimum of 25 feet on either side of the proposed alignment at 100 foot intervals to provide one (1) foot contours.
    - Other significant grade breaks (walls, ramps, ground slope changes, etc.)
    - Fire hydrants, water meters, valves, and blow offs (Provide rim elevations and top nut measure downs for valves).
    - Gas meters and valves.

- Power poles, overhead electric lines, telephone, and electrical pedestals.
- Storm Sewer inlets, manholes, and junction boxes with flow-line elevations, rim elevations, size, depth, and type.
- Wastewater manholes with flow-line elevations, cleanouts, rim elevations, size, depth, and type.
- Identify drainage channels, ditches, and swales. Identify culvert sizes and flow lines.
- Show channel/ditch/creek features, including top of bank, high bank, side slopes, berms, center line of creek and back-slope interceptors. Show limits of riprap and slope paving.
- Identify brush or tree lines only. Some trees will be shown if accessible without cutting.
- Locate visible indications of utilities (gas mains, electric, telephone, cable TV, communication fiber optics, etc.)
- Locate ROW markers and pipeline markers (provide information from pipeline marker sign).
- Roadway features: driveway/ground, back of sidewalk, front of sidewalk, back of curb, gutter, edge of concrete, edge of asphalt, crown of street, mailboxes, signs, and landscaping.
- Locate/verify existing property monuments to establish right-of-way and property lines suitable for engineering design. (Not a boundary survey)

v. Geotechnical Investigation & Report
   - FIELD SERVICES: Based on the size and scope of the project, and in accordance with the City of Sherman Standards, two (2) borings along the area of roadway extension to a depth of 20 feet each, or 5 feet into bedrock, whichever occurs first are proposed. This geotechnical scope would use one of the borings for bearing capacity recommendations for the creek crossing structure, and it assumes that drilling in the wooded area along the creek area is not achievable. The existing pavement, if needed, will be cored, and collected at each of the boring locations utilizing coring equipment. The borings will be drilled and sampled using a truck-mounted drilling rig. Conventional tube or split-barrel (standard penetration test) samples will be collected as appropriate for the soils encountered. Bedrock strata, if encountered, will be tested in-place

using the Texas Cone Penetration Test. The recovered subsurface samples will be described, then preserved, and labeled as to the appropriate boring number and depth in the field. These materials will be described in further detail in the laboratory by a staff geologist or engineer. Groundwater, if observed, will be recorded during and at the completion of drilling. After final groundwater observations, the borings will be backfilled with the excavated cuttings and patched.

- LABORATORY SERVICES: Selected laboratory testing of the recovered samples will be performed to evaluate soil index, volume change, and strength properties of the subsurface materials, and to provide data for analysis. These tests may include:
    - Moisture content
    - Atterberg limits
    - Percent passing No. 200 mesh sieve
    - Unconfined compression tests (soil and bedrock)
    - Overburden swell test
    - Soluble sulfates
    - pH-Lime Series
- ENGINEERING ANALYSIS & REPORT: Data obtained from the field investigation and laboratory tests will be presented in a geotechnical data report. Information to be provided includes the following:
    - A plan sheet indicating the approximate location of each boring.
    - A log of each boring with the boring number, depth of each stratum, material description, soil classification with laboratory test results, and groundwater information.
    - A discussion of subsurface soil and groundwater conditions.
    - A brief discussion of the site geology.
    - Estimates of soil movement related to settlement and expansive soils.
    - Outline of the engineering properties of the natural soils present, and any existing fill, if encountered.
    - Pavement subgrade preparation and pavement section recommendations in accordance with City of Sherman standards.
    - Bearing capacity recommendations for proposed creek-crossing structure.
    - Earthwork recommendations, including material type(s), compaction, and backfill requirements.
    - Electronic copy of the report.

III. ITEMS NOT INCLUDED IN THE EXISTING SCOPE OF SERVICES

A. **Additional Services not included in the existing Scope of Services** – City and Consultant agree the following services are beyond the Scope of Services described in the tasks above. However, Consultant can provide these services, if needed, upon the City's written request. Any additional amounts paid to the Consultant as a result of any material change to the Scope of the Project shall be agreed upon in writing by both parties before the services are performed. These Additional Services include the following:

1. Changes in Project Scope.
2. Traffic impact and/or signalization studies.
3. Value engineering revisions unless input is received during design, plan changes requested after obtaining permits, or during construction.
4. Hydraulic modeling or water flow test of existing water systems.
5. Environmental assessments and permitting.
6. Preparation of permits and applications, other than the City of Sherman's ROW Permit for utility marking.
7. Effort and expenses required to change, adjust, or modify the construction documents after receipt of approval of the preliminary plan.
8. Effort and expenses related to drafting legal descriptions, drawings, or exhibits required to modify existing or create new easements, other than those indicated in the above section(s).
9. Design of sanitary sewer, or potable water, other than those indicated in the above section(s).
10. Landscape, irrigation, and/or lighting designs and or modifications.
11. Preparation of renderings or exhibits.
12. The Consultant nor our subconsultants will not be responsible for damage utilities that are not clearly marked during geotechnical field services.

EXHIBIT B
PROJECT BUDGET SUMMARY

I. Basic Services

A. Project Management	**$11,655.00 (Hourly, NTE)**
B. Preliminary Design Plans (30%) – Segment 1 (Expected Completion: September 2024)	**$30,000.00 (LS)**
C. Intermediate Design Plans (60%) – Segment 1 (Expected Completion: October 2024)	**$24,015.00 (LS)**
D. Final Design/Construction Plans (90%, 100%) – Segment 1 (Expected Completion: November 2024)	**$20,455.00 (LS)**
E. Schematic Design – Segment 2 (Expected Completion: September 2024)	**$10,260.00 (LS)**
F. Bid Phase Services (Expected Completion: December 2024)	**$7,735.00 (Hourly, NTE)**
G. Construction Phase Services	**$10,700.00 (Hourly, NTE)**
Total Basic Services (As Noted)	***$114,820.00***

II. Special Services

Right-of-Way Descriptive instruments for 1 parcel at $8,045.00 each:	$8,045.00 (EA)
Drainage/Construction Easement Descriptive instruments for 2 parcels at $2,182.50 each:	$4,365.00 (EA)
Design Surveying – Segment 1	$23,905.00 (LS)
Schematic Survey – Segment 2	$9,590.00 (LS)
Geotechnical Investigation & Report:	$6,435.00 (LS)
Total Authorized Special Services	***$52,340.00***
Project Budget, Grand Total (Not-To-Exceed)	***$167,160.00***

1. Files shall be done in DWG/DXF format.

2. Files shall be georeferenced in the State Plane, Texas North Central FIPS 4202 (feet) coordinate system, using a datum of NAD 83 Grid.

3. If a surface adjustment factor is applied to the data, any surface adjustment factors used should be clearly documented on the drawing.

4. If submissions for the Project relate to a plat, the file submitted must match exactly the plat that is submitted for recording.

5. The file shall contain required features for the project type as detailed below:

    a. Pre-Construction/As-Built Plans and/or Record Documents:
        i. Layers from Final Plat Requirements as Applicable to Project Type.
        ii. Water Utility Features.
        iii. Sanitary Sewer Features.
        iv. Storm Sewer Features.

6. Each required feature group should be provided as a separate layer within the file.

7. Layer names should be representative of the information contained in the layer.

8. Line work should be done per accepted industry norms.

Text should not be smaller than 0.08” on a full-size sheet, and should be a font such at Simplex, Calibri, or Arial.

EXHIBIT D
CONSULTANT'S GUIDELINES FOR DIRECT EXPENSES; GENERAL AND ADMINISTRATIVE MARKUP; TRAVEL AND SUBSISTENCE EXPENSES

I. **CONSULTANT'S RESPONSIBILITY**. Consultant shall be solely responsible for the auditing and accuracy of all Direct Expenses, approved markup (general and/or administrative), and approved travel and/or subsistence charges, including those of its subcontractors, prior to submitting to City for reimbursement. Any over-payment by City for errors in submittals for reimbursement may be deducted from Consultant's subsequent payment(s) for services; however, this shall not be City's sole and exclusive remedy for said over-payment.

II. **GUIDELINES FOR DIRECT EXPENSES**.

A. **Local Transportation** – Transportation in connection with the Project, when such transportation is not a function of routine performance of the duties of Consultant in connection with the Project, and when such transportation exceeds beyond fifty (50) miles from the Project site, shall be reimbursed at a standard mileage rate consistent with that as issued, and periodically revised, by the United States Internal Revenue Service (IRS). Under no circumstances shall City reimburse Consultant at a higher standard mileage rate or pay additional markup on charges for local transportation. Completion of City's Standard Mileage Log is required for submittal of these charges for reimbursement, including justification for each submitted expense.

Under no circumstances are charges associated with rental cars for local transportation eligible for reimbursement by City. Toll road subscriptions or toll plaza receipts are not reimbursable. Consultant agrees to place these standards in all subcontracts for work on the Project.

B. **Supplies, Material, Equipment** – City shall reimburse the actual cost of other similar direct Project-related expenses, which are duly presented in advance and approved by City's Project Manager in writing.

C. **Commercial Reproduction** – City shall reimburse the actual cost of reproductions, specifically limited to progress prints prepared for presentation to City at each phase of progress, and final Construction Documents prepared for distribution at bidding phase, provided that Consultant has duly obtained at least three (3) quotations from commercial firms and has chosen the best value for City. Consultant shall provide such documentation to City for review prior to submitting these expenses for reimbursement. Consultant agrees to place these standards in all subcontracts for work on the Project.

D. **In-House Reproduction** – Consultant shall make arrangements with City for prior approval of in-house reproduction rates prior to submitting these expenses for reimbursement. City shall provide Consultant with a standard format for documenting these charges. Completion of City's reproduction log is required as

a prerequisite for payment, including the number or reproductions, the date, time, description, the approved standard rate, and a justification for each submitted expense for reimbursement. Consultant agrees to place these standards in all subcontracts for work on the Project.

E. **Commercial Plotting** – City shall reimburse the actual cost of plots, specifically limited to final documents, provided Consultant has duly obtained at least three (3) quotations from commercial firms and has chosen the best value for City. Consultant shall provide such documentation to City for review prior to submitting these expenses for reimbursement. Consultant agrees to place these standards in all subcontracts for work on the Project.

F. **In-House Plotting** – Consultant shall make arrangements with City for prior written approval of in-house plotting rates prior to submitting these charges for reimbursement. City shall provide Consultant with a standard format for documenting these charges. Completion of City's reproduction log is required as a prerequisite for payment, including the number of plots, the date, time, description, the approved standard rate, and a justification for each submitted charge for reimbursement.

G. **Communications** – Reimbursement for expenses relating to electronic communications shall be limited to long-distance telephone or fax toll charges specifically required in the discharge of professional responsibilities related to the Project. Telephone service charges including office or cellular phones, WATTS, or Metro line services or similar charges are not reimbursable.

H. **Postage, Mail, and Delivery Service** – City shall reimburse the actual cost of postage and delivery of Instruments of Service, provided Consultant duly considers all circumstances (including available time for assured delivery) of the required delivery and selects the best value for City, which may require comparison of delivery costs offered by three (3) or more sources or methods of delivery, which at a minimum shall include U.S. Mail. Courier service is acceptable only in circumstances requiring deadline-sensitive deliveries and not for the convenience of Consultant and/or Consultant's employees. Consultant agrees to place these standards in all subcontracts for work on the Project.

I. **Meals and Other Related Charges** – Meals or any other related expenses are not reimbursable unless incurred outside a fifty (50) mile radius of the Project, and then only reimbursable for the actual cost subject to compliance with City's currently adopted policy. Non-allowable costs include, but are not limited to, charges for entertainment, alcoholic beverages, and gratuities.

III. GUIDELINES FOR GENERAL AND ADMINISTRATIVE MARKUP.

A. **Requirement of Prior Approval** – Consultant may be allowed to charge a General and/or Administrative Markup on work completed if Consultant can clearly define to City specifically what costs are included in the markup calculation. To apply General and/or Administrative Markup, Consultant must also document to City what costs would be considered direct costs. City shall issue approval in writing to allow Consultant to charge General and/or Administrative Markup. City reserves the right to reject any and all requests for General and/or Administrative Markup.

IV. GUIDELINES FOR TRAVEL AND SUBSISTENCE EXPENSES.

A. **Requirement of Prior Approval** – City shall reimburse the actual cost of travel and/or subsistence expenses upon prior written approval by City's Project Manager.

B. **Adherence to Currently Adopted City Travel Policy** – Reimbursements shall be governed by the same travel policies provided for City employees according to current adopted policy. Prior to the event, Consultant shall request, and City's Project Manager shall provide the provisions and the restrictions that apply to out-of-town reimbursements.

EXHIBIT E
CONTRACTOR'S INSURANCE GUIDELINES

I. GENERAL INSURANCE REQUIREMENTS –

A. All policies shall name the City of Sherman, its officers and employees as additional insured as to all applicable coverage with the exception of workers compensation insurance and professional liability insurance.

B. Such policies shall require the provision of written notice to City at least thirty (30) days prior to cancellation of any policies, evidenced by return receipt or United States Certified Mail.

C. Such policies shall provide for a waiver of subrogation against City for injuries, including death, property damage or any other loss to the extent the same is covered by the proceeds of the insurance.

II. INSURANCE COMPANY QUALIFICATION – All insurance companies providing the required insurance shall be authorized to transact business in the State of Texas, and shall have a minimum rating of "A" by A.M. Best's Key Rating Guide, or other equivalent rating service(s).

III. CERTIFICATE OF INSURANCE – A Certificate of Insurance and policy endorsement(s) evidencing the required insurance shall be submitted prior to execution of the Agreement. If the Agreement is renewed or extended by City, a Certificate of Insurance and policy endorsement(s) shall also be provided to City prior to the date the Agreement is renewed or extended.

IV. INSURANCE CHECKLIST – "X" means that the following coverage(s) is required for this Agreement.

		Coverage Required	Limits
_X_	1.	Worker's Compensation & Employer's Liability	▪ Statutory Limits of the State of Texas
_X_	2.	General Liability	▪ Minimum $1,000,000.00 each occurrence; ▪ Minimum $2,000,000.00 in the aggregate
___	3.	XCU Coverage	▪ Minimum $1,000,000.00 each occurrence; ▪ Minimum $2,000,000.00 in the aggregate

_X_	4.	Professional Liability	▪ Minimum $1,000,000.00 each claim; ▪ Minimum $2,000,000.00 in the aggregate
_X_	5.	Umbrella Coverage of Excess Liability Coverage	▪ An amount of $2,000,000.00 ▪ Minimum $2,000,000.00 in the aggregate

_X_ 6. City and its officers and employees named as additional insured on General Liability Policy, as provided above. This coverage is primary to all other coverage City may possess.

_X_ 7. General Liability Insurance provides for a Waiver of Subrogation against the City for injuries, including death, property damage, or any other loss to the extent that same is covered by the proceeds of the insurance. All insurance policies that are required to name the City as an additional insured must be endorsed to read as primary and non-contributory coverage regardless of the application of other insurance.

_X_ 8. Thirty (30) days' notice of cancellation, non-renewal, or material change required. The words "endeavor to" and "but failure" (to end of sentence) are to be eliminated from the Notice of Cancellation provision on standard ACORD certificates.

_X_ 9. Insurance company has a minimum rating of "A" by A.M. Best's Key Rating Guide, or other equivalent rating service(s).

_X_ 10. The Certificate of Insurance must state the project title and bid number.

___ 11. Other Insurance Requirements (State Below):

CONFLICT OF INTEREST QUESTIONNAIRE

FORM CIQ

For vendor doing business with local governmental entity

This questionnaire reflects changes made to the law by H.B. 23, 84th Leg., Regular Session.

This questionnaire is being filed in accordance with Chapter 176, Local Government Code, by a vendor who has a business relationship as defined by Section 176.001(1-a) with a local governmental entity and the vendor meets requirements under Section 176.006(a).

By law this questionnaire must be filed with the records administrator of the local governmental entity not later than the 7th business day after the date the vendor becomes aware of facts that require the statement to be filed. *See* Section 176.006(a-1), Local Government Code.

A vendor commits an offense if the vendor knowingly violates Section 176.006, Local Government Code. An offense under this section is a misdemeanor.

OFFICE USE ONLY

Date Received

1 **Name of vendor who has a business relationship with local governmental entity.**

WADE TRIM, INC.

2 ☐ **Check this box if you are filing an update to a previously filed questionnaire.** (The law requires that you file an updated completed questionnaire with the appropriate filing authority not later than the 7th business day after the date on which you became aware that the originally filed questionnaire was incomplete or inaccurate.)

3 **Name of local government officer about whom the information is being disclosed.**

NONE

Name of Officer

4 **Describe each employment or other business relationship with the local government officer, or a family member of the officer, as described by Section 176.003(a)(2)(A). Also describe any family relationship with the local government officer. Complete subparts A and B for each employment or business relationship described. Attach additional pages to this Form CIQ as necessary.**

A. Is the local government officer or a family member of the officer receiving or likely to receive taxable income, other than investment income, from the vendor?

☐ Yes ☐ No

B. Is the vendor receiving or likely to receive taxable income, other than investment income, from or at the direction of the local government officer or a family member of the officer AND the taxable income is not received from the local governmental entity?

☐ Yes ☐ No

5 **Describe each employment or business relationship that the vendor named in Section 1 maintains with a corporation or other business entity with respect to which the local government officer serves as an officer or director, or holds an ownership interest of one percent or more.**

6 ☐ Check this box if the vendor has given the local government officer or a family member of the officer one or more gifts as described in Section 176.003(a)(2)(B), excluding gifts described in Section 176.003(a-1).

7 Signature of vendor doing business with the governmental entity

4/2/2024

Date

Form provided by Texas Ethics Commission www.ethics.state.tx.us Revised 1/1/2021

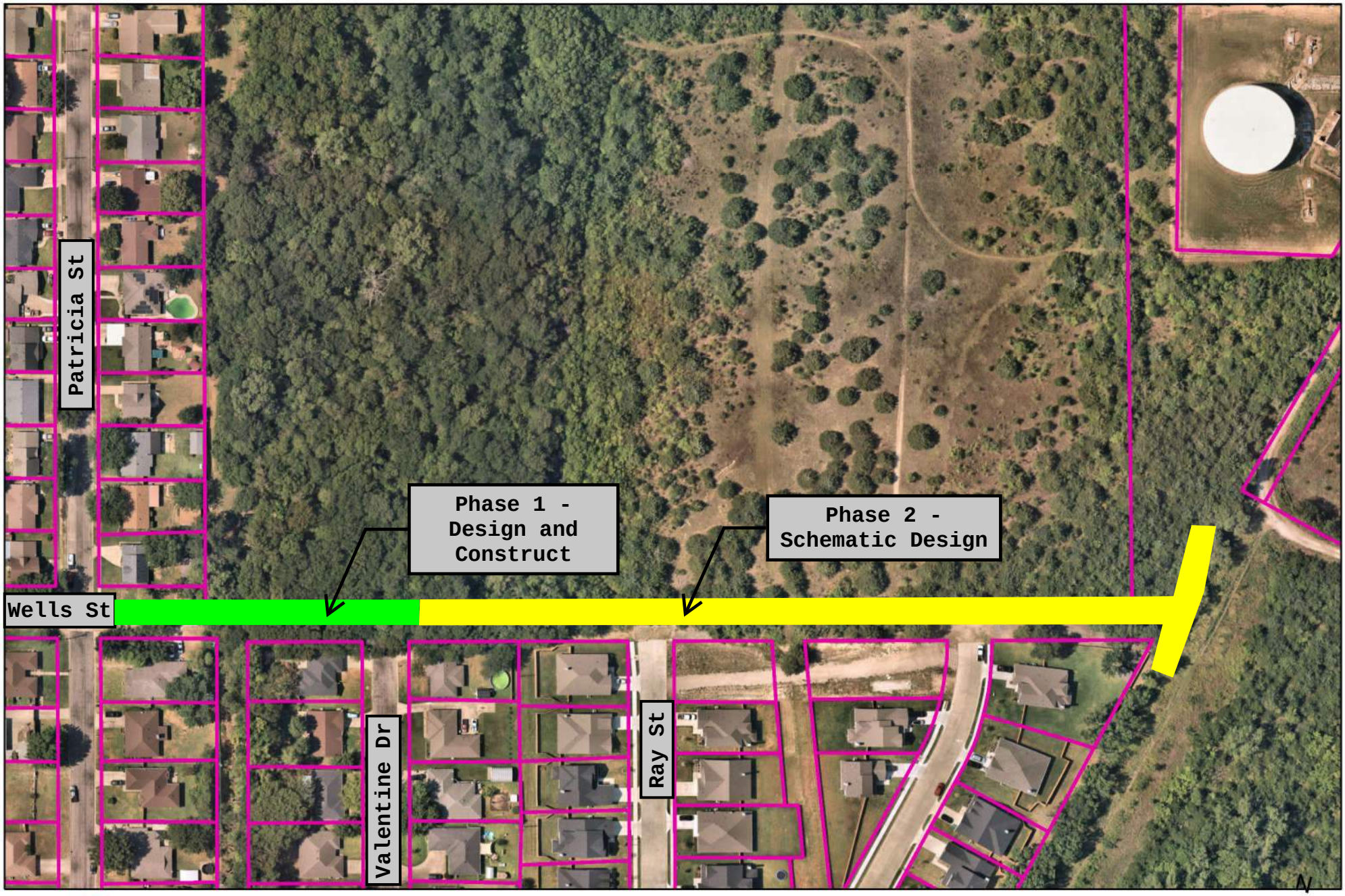

Sherman
CLASSIC TOWN. BROAD HORIZON.

50 25 0 50 100 150 200
Feet

SHERMAN CITY COUNCIL
Agenda Communication Form

City Council Regular Meeting Agenda Item No. H.8.

Meeting Date: 4/15/2024

Prepared By: Wayne Lee, Director of Engineering

Approved By: Robby Hefton, City Manager

Caption:

**** RESOLUTION NO. 7288***

Authorizing Execution of Amendment No. 3 to the Professional Services Agreement with GEOTEX Engineering, LLC for the Annual Geotechnical Engineering and Construction Materials Testing

Issue:

To consider Amendment No. 3 to the Professional Services Agreement with GEOTEX Engineering, LLC for the Annual Geotechnical Engineering and Construction Materials Testing contract.

Background:

On December 22, 2022, City Council awarded a Professional Services Agreement contract with D&S Engineering Labs, LLC, now doing business as GEOTEX Engineering, LLC, for an Annual Geotechnical Engineering and Construction Materials Testing contract with an estimated 12-month amount of $275,000. This contract is utilitized for the City's subdivision concrete and soils testing and capital improvement project geotechnical investigations and testing. This contract is renewable upon agreement of both parties.

On July 18, 2023, City Council approved Amendment No. 1 increasing the estimated 12-month amount to $600,000.

On November 6, 2023, City Council approved Amendment No. 2 increasing the estimated 12-month amount to $1.3 million.

This Amendment No. 3 renews the contract for another 12-month period with GEOTEX Engineering, LLC, for an estimated amount of $1.3 million per 12-month period.

Origination:

Engineering Department

Financial Consideration:

This will be funded on a project by project basis out of the Engineering Department's Professional Services budget and CIP project budgets.

Staff Recommendation:

It is recommended that Amendment No. 3 to the Professional Services Agreement with GEOTEX Engineering, LLC for the Annual Geotechnical Engineering and Construction Materials Testing contract be approved.

Alternatives:
As may be directed by the City Council.

Attachments:
1. Resolution No. 7288
2. Amendment No 3 to DS Annual Geotech and Material Testing Contract rev 2024-04-03 (003)
3. Amendment No. 1
4. Amendment No. 2
5. Professional Services Agreement

RESOLUTION NO. 7288

A RESOLUTION OF THE CITY COUNCIL OF THE CITY OF SHERMAN, TEXAS, AUTHORIZING EXECUTION OF AMENDMENT NO. 3 TO THE PROFESSIONAL SERVICES AGREEMENT WITH GEOTEX ENGINEERING, LLC FOR THE ANNUAL GEOTECHNICAL ENGINEERING AND CONSTRUCTION MATERIALS TESTING; FINDING AND DETERMINING THAT THE MEETING AT WHICH THIS RESOLUTION IS PASSED WAS NOTICED AND IS OPEN TO THE PUBLIC AS REQUIRED BY LAW.

BE IT RESOLVED BY THE CITY COUNCIL OF THE CITY OF SHERMAN, TEXAS:

SECTION 1. That the City Manager be and is hereby authorized and directed, subject to all contract documents being properly completed and approved as to form and content by the City Attorney, to execute Amendment No. 3 to the Professional Services Agreement with GEOTEX Engineering, LLC for the Annual Geotechnical Engineering and Construction Materials Testing, in accordance with all contract documents attached hereto and made a part hereof for all purposes.

SECTION 2. That it is hereby officially found and determined that the meeting at which this resolution is passed is open to the public and that public notice of the time, place, and purpose of said meeting was given as required by law.

DULY PASSED AND APPROVED BY THE CITY COUNCIL OF THE CITY OF SHERMAN, TEXAS on this the 15th day of April 2024.

CITY OF SHERMAN, TEXAS

BY: _____
DAVID PLYLER, MAYOR

ATTEST:

BY:_____
LINDA ASHBY, CITY CLERK

APPROVED AS TO FORM AND CONTENT:
THE LAW FIRM OF ABERNATHY,
ROEDER, BOYD & HULLETT, P.C.

BY: _____
RYAN D. PITTMAN, CITY ATTORNEY

AMENDMENT NO. 3

TO THE AGREEMENT FOR PROFESSIONAL SERVICES BETWEEN THE CITY OF SHERMAN (CITY) AND D&S ENGINEERING LABS, LLC. NOW DOING BUSINESS AS GEOTEX ENGINEERING, LLC. (CONSULTANT) FOR THE ANNUAL GEOTECHNICAL ENGINEERING AND CONSTRUCTION MATERIAL TESTING CONTRACT

Dated December 12, 2022 ("Original Agreement")

Owner and Engineer desire to amend the Original Agreement for the purpose of: (i) renewing the contract for another twelve (12) months, and (ii) making other necessary amendments as follows:

This Amendment No. 3 shall be effective on the date it is executed by the last party to execute it. The CITY and CONSULTANT hereby agree to amend ARTICLE 3 of this Original Agreement and Amendment No. 1 and Amendment No. 2 to read as follows:

3.1. **Compensation for Consultant's Services** – As described in "Article 1, Consultants Services" of this Agreement, compensation for this Project shall be: (a) on a time and material per project basis for a contract estimated amount of **One Million Three Hundred Thousand Dollars ($1,300,000.00)** per renewal period ("Consultant's Fee"); and (b) paid in accordance with this Article 3 and the Annual Geotechnical Engineering and Construction Material Testing Fee Schedule as set forth in **Exhibit B**.

[Rest of page left intentionally blank]

This Amendment No. 3 shall be effective on the date it is executed by the last party to execute it. The CITY and CONSULTANT hereby agree to amend ARTICLE 12 of this Original Agreement and Amendment No. 1 and Amendment No. 2 to read as follows:

12.22. **Appropriation of Funds** – Funds are not presently budgeted for City's performance und this Agreement beyond the end o the City's 2023-2024 fiscal year. City will give Consultant sixty (60) days' notice if funds for the City's performance are not budgeted to continue beyond that time. City shall have not liability for payment of any money for services performed after the end of City's 2023-2024 fiscal year that have not been encumbered with a Purchase Order (PO) unless and until such funds are budgeted.

[Rest of page left intentionally blank]

This Amendment No. 3 shall be effective on the date it is executed by the last party to execute it. The CITY and CONSULTANT hereby agree to amend EXIBIT B of this Original Agreement and Amendment No. 1 and Amendment No. 2 to read as follows:

EXHIBIT B
ANNUAL GEOTECHNICAL ENGINEERING AND CONSTRUCTION MATERIAL TESTING FEE SCHEDULE

Compensation will be billed on the below fee schedule. An estimated budget of **One Million Three Hundred Thousand ($1,300,000.00)** is established for a twelve (12) month period and may be renewed at the mutual agreement of the City and Consultant. Below is the GEOTEX Engineering Fee Schedule for the period of this contract.

GEOTEX Engineering Hourly Fee Schedule

Geotechnical Engineering Services

PERSONNEL FEES*	STANDARD FEE
Principal	$295
Senior CMET Engineer (P.E)	$250
Senior Geologist (P.G.)	$160
Staff CMET Engineer (P.E.)	$160
CMET Operations/Technical Manager	$175
Storm Shelter Visual Observation	$125
CMET Project Manager	$125
CMET Engineering Intern (E.I.T) / Geologist (G.I.T.)	$110
Quality Control	$110
Administrative	$70

*Personnel fees are listed per hour

Testing Service Fees

AGGREGATES	REFERENCE STANDARD	STANDARD FEE
Acid Insolubility	TEX 612J	$200
Clay Lumps and Friable Particles	ASTM 142	$80
LA Abrasion	ASTM C131 / AASHTO T 96	$250
Organic Impurities	ASTM C40	$75
Sand Equivalent	ASTM C2419 / AASHTO T 104	$75
Sieve Analysis		
Sieve Analysis for Coarse or Fine Aggregate, without Wash	ASTM C136	$125
Sieve Analysis for Coarse or Fine Aggregate, with Wash	ASTM C136 & C117	$145
Decant	ASTM C117	$45
Magnesium Sulfate Soundness	ASTM C88 / AASHTO T 104	$370
Specific Gravity and Absorption	ASTM C127/C128 / AASHTO T84/T85	$105
Unit Weight	ASTM C29 / AASHTO T 19	$55
Flex Base Sieve Analysis (Item 247)	TEX-110E	$260
Wet Ball Mill	TEX 116E	$235
Vibratory Proctor	ASTM D4253	$475

SOILS TESTING	REFERENCE STANDARD	STANDARD FEE
Atterberg Limits	ASTM D4318, method A & B	$95
Atterberg Limits,	Tex-104, 105, & 106-E	$110
Crumb Test	ASTM D6572	$40
Dynamic Cone Penetrometer (In-situ CBR), per test		$85
Lime & Cement Depth Check		$20
Field Gradation (Stabilized Soils)		$20
Hydrometer Analysis with Distribution Curve,	ASTM D422	$160
In-place Moisture Density Test, (min. 3 tests/site visit)	ASTM D6938	$20
Optional daily gauge fee, upon request	AASHTO T 310	call for quote
Lime Series, Plasticity Index Method		$500
Lime Series, pH Method	ASTM D6276	$525
Moisture Content		$15
Overburden Swell, each		$90
Percent Material Passing No. 200 Sieve, each	ASTM D1140 / AASHTO T 11	$50
Permeability Test, Flexible-Wall Test, <2.87-inch Diameter,	ASTM D5084	$500
Proctor Test		
Moisture Density Relationships, method A & B/method C	ASTM D698 / AASHTO T 99	$185/$200
Moisture Density Relationships, Treated Proctor method A & B/method C	ASTM D698 / AASHTO T 99	$280
Moisture Density Relationships, method A & B/method C	ASTM D1557 / AASHTO T 180	$225/$250
Moisture Density Relationships	TEX-113-E	$350
Moisture Density Relationships,	TEX-114-E	$225
Oversized Correction Factor	ASTM D4718 / AASHTO T 2224	$75
Resistivity	ASTM G187	$95
Resistivity	TEX 129-E	$260
Soil/Cement Series	ASTM D1633	$1,575
Standard Test for pH of Soil	ASTM D4972 / AASHTO T289 TEX-128-E	$75
Sulfate Content in Soils, Colorimetric Method	TEX-145-E	$105

ASPHALT TESTING	REFERENCE STANDARD	STANDARD FEE
Asphalt Coring		
Mobilization Fee (Coring)		$375
Asphalt Cores, 6" or less (additional $13.50 per inch for depths greater than 6")		$75
Disposal Fee, each		$30
Asphalt Content by Ignition Method,	ASTM D6307 / AASHTO T 308 TEX-236-F	$150
Sieve Analysis of Extracted Aggregate,	ASTM D5444 / AASHTO T 30 TEX-200-F	$120
Density Testing		
Molding of Lab Density Specimens (Superpave), per 2 samples	ASTM D6925 / AASHTO T-312 TEX-241-F	$80
Molding of Lab Density Specimens (Texas Gyratory), per 3 samples	ASTM D4013 / TEX-206-F	$90
Determining Density of Compacted Specimens	ASTM D2726 / AASHTO T-312 TEX-207-F	$45
Determining Density of Asphalt Cores	ASTM D2950 / AASHTO T-166 TEX-207-F	$45
Disposal Fee, each		$30
Maximum Theoretical Specific Gravity (Rice Value)	ASTM D2041 / AASHTO T 209 TEX-227-F	$100
PQ 301 Non-Nuclear Asphalt Density Gauge/Nuclear Density Gauge, equipment Fee - daily rate		$125
Field Personnel - Certified Roadway Specialist, per hour		$65

STRUCTURAL STEEL	REFERENCE STANDARD	STANDARD FEE
Visual Observation (5 hour minimum), per hour		$85
Ultrasonic Inspection (5 hour minimum), per hour		$95
Material Charge (U.I.)		$50
Fireproofing Inspection (5 hour minimum), per hour		$95
Density Testing, per test		$35
Adhesion Bond Test, per test		$45
Specialized Testing		call for quote

Miscellaneous Fees

MISCELLANEOUS FEES	STANDARD FEE
New Project Set Up	$250
Project Coordination/Report Preparation	10% of invoice
Project Management	10% of invoice
Project Engineer	2.5% of invoice
Vehicle Transportation Fees	
Within 30 miles	$50
Over 30 miles (additional rate per mile, round trip)	$0.65
Per Diem (Lodging and Food), per day (may vary with location)	$150
Project Completion Letters (please notify Geotex at beginning of project if required), per hour	$250

The parties hereby ratify and confirm all of the terms, provisions, covenants and conditions of the Original Agreement and Amendment No. 1 and Amendment No. 2 and acknowledge and agree that the Original Agreement remains in full force and effect, except as amended in this Amendment No. 3. To the extent that any provision contained herein conflicts with the Original Agreement and Amendment No. 1 and Amendment No. 2, the provision contained herein shall supersede such conflicting provision contained in the Original Agreement and Amendment No. 1 and Amendment No. 2. This Amendment No. 3 and the Original Agreement and Amendment No. 1 and Amendment No. 2 contain the entire agreement of the parties with respect to the matters contained herein. This Amendment No. 3 may not be modified or terminated except upon the provisions hereof or by the mutual written agreement of the parties hereto. Any term not defined herein shall be deemed to have the meaning ascribed to it under the Original Agreement and Amendment No. 1 and Amendment No. 2.

[Rest of page left intentionally blank]

EXECUTED on behalf of CONSULTANT as shown below, and on behalf of the CITY by its City Manager (thereunto duly authorized) this _____ day of _____, 2024.

CITY:	**CONSULTATN:**
City of Sherman, Texas	**GEOTEX Engineering, LLC**
	Amy Brothers
Robby Hefton, City Manager	**Amy Brothers, President**
ATTEST:	**ATTEST:**
Linda Ashby	
City Clerk	

APPROVAL RECOMMENDED:

Wayne E. Lee, P.E., CFM / Director Engineering

APPROVED AS TO FORM:
THE LAW FIRM OF ABERNATHY,
ROEDER, BOYD & HULLETT, P.C.

BY: _____
Ryan D. Pittman
City Attorney

CORPORATE ACKNOWLEDGMENT

THE STATE OF TEXAS §
§
COUNTY OF Tarrant §

BEFORE ME, the undersigned authority, a Notary Public in and for said County and State, on this day personally appeared Amy Brothers of GEOTEX Engineering, LLC known to me to be the person and officer whose name is subscribed to the foregoing instrument and acknowledged to me that the same was the act of the said GEOTEX Engineering, LLC, a corporation, that (s)he was duly authorized to perform the same by appropriate resolution of the board of directors of such corporation for the purposes and consideration therein expressed, and in the capacity therein stated.

GIVEN UNDER MY HAND AND SEAL OF OFFICE this the 10th day of April, A.D. 2024.

MARY AMBER BOYSEN
Notary Public, State of Texas
Comm. Expires 04-19-2026
Notary ID 133713409

Mary Boysen
Notary Public In and For Tarrant County, Texas

My Commission Expires:

04/19/2026

RESOLUTION NO. 7105

A RESOLUTION OF THE CITY COUNCIL OF THE CITY OF SHERMAN, TEXAS, AUTHORIZING EXECUTION OF AMENDMENT NO. 1 TO THE PROFESSIONAL SERVICES AGREEMENT WITH D&S ENGINEERING LABS, LLC NOW DOING BUSINESS AS GEOTEX ENGINEERING, LLC FOR THE ANNUAL GEOTECHNICAL ENGINEERING AND CONSTRUCTION MATERIALS TESTING; FINDING AND DETERMINING THAT THE MEETING AT WHICH THIS RESOLUTION IS PASSED WAS NOTICED AND IS OPEN TO THE PUBLIC AS REQUIRED BY LAW.

BE IT RESOLVED BY THE CITY COUNCIL OF THE CITY OF SHERMAN, TEXAS:

SECTION 1. That the City Manager be and is hereby authorized and directed, subject to all contract documents being properly completed and approved as to form and content by the City Attorney, to execute Amendment No. 1 to the Professional Services Agreement with D&S Engineering Labs, LLC now doing business as GEOTEX Engineering, LLC for the Annual Geotechnical Engineering and Construction Materials Testing, in accordance with all contract documents attached hereto and made a part hereof for all purposes.

SECTION 2. That it is hereby officially found and determined that the meeting at which this resolution is passed is open to the public and that public notice of the time, place, and purpose of said meeting was given as required by law.

DULY PASSED AND APPROVED BY THE CITY COUNCIL OF THE CITY OF SHERMAN, TEXAS on this the 17th day of July 2023.

CITY OF SHERMAN, TEXAS

ATTEST:

BY: Linda Ashby
LINDA ASHBY, CITY CLERK

BY: _____
DAVID PLYLER, MAYOR

APPROVED AS TO FORM AND CONTENT:
THE LAW FIRM OF ABERNATHY, ROEDER, BOYD & HULLETT, P.C.

BY: _____
RYAN D. PITTMAN, CITY ATTORNEY

AMENDMENT NO. 1

TO THE AGREEMENT FOR PROFESSIONAL SERVICES BETWEEN THE CITY OF SHERMAN (CITY) AND D&S ENGINEERING LABS, LLC. NOW DOING BUSINESS AS GEOTEX ENGINEERING, LLC. (CONSULTANT) FOR THE ANNUAL GEOTECHNICAL ENGINEERING AND CONSTRUCTION MATERIAL TESTING CONTRACT

Dated December 12, 2022 ("Original Agreement")

Owner and Engineer desire to amend the Original Agreement for the purpose of: (i) increasing the estimated annual amount of the Compensation for Consultant's Services (defined in the Original Agreement) due to an increase amount of projects and development, and (ii) making other necessary amendments as follows:

This Amendment No. 1 shall be effective on the date it is executed by the last party to execute it. The CITY and CONSULTANT hereby agree to amend ARTICLE 3 of this Original Agreement to read as follows:

3.1. **Compensation for Consultant's Services** – As described in "Article 1, Consultants Services" of this Agreement, compensation for this Project shall be: (a) on a time and material er project basis for a contract estimated amount of **Six Hundred Thousand Dollars ($600,000.00)** ("Consultant's Fee"); and (b) paid in accordance with this Article 3 and the Annual Geotechnical Engineering and Construction Material Testing Fee Schedule as set forth in **Exhibit B**.

The parties hereby ratify and confirm all of the terms, provisions, covenants and conditions of the Original Agreement and acknowledge and agree that the Original Agreement remains in full force and effect, except as amended in this Amendment No. 1. To the extent that any provision contained herein conflicts with the Original Agreement, the provision contained herein shall supersede such conflicting provision contained in the Original Agreement. This Amendment No. 1 and the Original Agreement contain the entire agreement of the parties with respect to the matters contained herein. This Amendment No. 1 may not be modified or terminated except upon the provisions hereof or by the mutual written agreement of the parties hereto. Any term not defined herein shall be deemed to have the meaning ascribed to it under the Original Agreement.

[Rest of page left intentionally blank]

EXECUTED on behalf of CONSULTANT as shown below, and on behalf of the CITY by its City Manager (thereunto duly authorized) this 18 day of July, 2023.

CITY:
City of Sherman, Texas

Robby Hefton

Robby Hefton, City Manager

CONSULTATN:
GEOTEX Engineering, LLC

Amy Brothers

Amy Brothers, President

ATTEST:

Linda Ashby

Linda Ashby
City Clerk

ATTEST:

Tammy Renea Low

APPROVAL RECOMMENDED:

Wayne E. Lee

Wayne E. Lee, P.E., CFM / Director Engineering

APPROVED AS TO FORM:
THE LAW FIRM OF ABERNATHY, ROEDER, BOYD & HULLETT, P.C.

BY: Ryan D. Pittman

Ryan D. Pittman
City Attorney

CORPORATE ACKNOWLEDGMENT

THE STATE OF TEXAS §
§
COUNTY OF Denton §

BEFORE ME, the undersigned authority, a Notary Public in and for said County and State, on this day personally appeared Amy Brothers of GEOTEX Engineering, LLC known to me to be the person and officer whose name is subscribed to the foregoing instrument and acknowledged to me that the same was the act of the said GEOTEX Engineering, LLC, a corporation, that (s)he was duly authorized to perform the same by appropriate resolution of the board of directors of such corporation for the purposes and consideration therein expressed, and in the capacity therein stated.

GIVEN UNDER MY HAND AND SEAL OF OFFICE this the 13th day of July, A.D. 2023.

Tammy Renea Low

Notary Public In and For Denton County, Texas

My Commission Expires:

4-7-2027

Tammy Renea Low
My Commission Expires
4/7/2027
Notary ID 128575497

RESOLUTION NO. 7215

A RESOLUTION OF THE CITY COUNCIL OF THE CITY OF SHERMAN, TEXAS, AUTHORIZING EXECUTION OF AMENDMENT NO. 2 TO THE PROFESSIONAL SERVICES AGREEMENT WITH GEOTEX ENGINEERING, LLC FOR THE ANNUAL GEOTECHNICAL ENGINEERING AND CONSTRUCTION MATERIALS TESTING; FINDING AND DETERMINING THAT THE MEETING AT WHICH THIS RESOLUTION IS PASSED WAS NOTICED AND IS OPEN TO THE PUBLIC AS REQUIRED BY LAW.

BE IT RESOLVED BY THE CITY COUNCIL OF THE CITY OF SHERMAN, TEXAS:

SECTION 1. That the City Manager be and is hereby authorized and directed, subject to all contract documents being properly completed and approved as to form and content by the City Attorney, to execute Amendment No. 2 to the Professional Services Agreement with GEOTEX Engineering, LLC for the Annual Geotechnical Engineering and Construction Materials Testing, in accordance with all contract documents attached hereto and made a part hereof for all purposes.

SECTION 2. That it is hereby officially found and determined that the meeting at which this resolution is passed is open to the public and that public notice of the time, place, and purpose of said meeting was given as required by law.

DULY PASSED AND APPROVED BY THE CITY COUNCIL OF THE CITY OF SHERMAN, TEXAS on this the 6th day of November 2023.

CITY OF SHERMAN, TEXAS

BY: _____
DAVID PLYLER, MAYOR

ATTEST:

BY: Linda Ashby
LINDA ASHBY, CITY CLERK

APPROVED AS TO FORM AND CONTENT:
THE LAW FIRM OF ABERNATHY, ROEDER, BOYD & HULLETT, P.C.

BY: _____
RYAN D. PITTMAN, CITY ATTORNEY

AMENDMENT NO. 2

TO THE AGREEMENT FOR PROFESSIONAL SERVICES BETWEEN THE CITY OF SHERMAN (CITY) AND D&S ENGINEERING LABS, LLC. NOW DOING BUSINESS AS GEOTEX ENGINEERING, LLC. (CONSULTANT) FOR THE ANNUAL GEOTECHNICAL ENGINEERING AND CONSTRUCTION MATERIAL TESTING CONTRACT

Dated December 12, 2022 ("Original Agreement")

Owner and Engineer desire to amend the Original Agreement for the purpose of: (i) increasing the estimated annual amount of the Compensation for Consultant's Services (defined in the Original Agreement and Amendment No. 1) due to an increase amount of projects and development, and (ii) making other necessary amendments as follows:

This Amendment No. 2 shall be effective on the date it is executed by the last party to execute it. The CITY and CONSULTANT hereby agree to amend ARTICLE 3 of this Original Agreement and Amendment No. 1 to read as follows:

3.1. **Compensation for Consultant's Services** – As described in "Article 1, Consultants Services" of this Agreement, compensation for this Project shall be: (a) on a time and material er project basis for a contract estimated amount of **One Million Three Hundred Thousand Dollars ($1,300,000.00)** ("Consultant's Fee"); and (b) paid in accordance with this Article 3 and the Annual Geotechnical Engineering and Construction Material Testing Fee Schedule as set forth in **Exhibit B**.

The parties hereby ratify and confirm all of the terms, provisions, covenants and conditions of the Original Agreement and Amendment No. 1 and acknowledge and agree that the Original Agreement remains in full force and effect, except as amended in this Amendment No. 2. To the extent that any provision contained herein conflicts with the Original Agreement and Amendment No. 1, the provision contained herein shall supersede such conflicting provision contained in the Original Agreement and Amendment No. 1. This Amendment No. 2 and the Original Agreement and Amendment No. 1 contain the entire agreement of the parties with respect to the matters contained herein. This Amendment No. 2 may not be modified or terminated except upon the provisions hereof or by the mutual written agreement of the parties hereto. Any term not defined herein shall be deemed to have the meaning ascribed to it under the Original Agreement and Amendment No. 1.

[Rest of page left intentionally blank]

EXECUTED on behalf of CONSULTANT as shown below, and on behalf of the CITY by its City Manager (thereunto duly authorized) this 7 day of November, 2023.

CITY:
City of Sherman, Texas

Robby Hefton, City Manager

CONSULTATN:
GEOTEX Engineering, LLC

Amy Brothers, President

ATTEST:

Linda Ashby
City Clerk

ATTEST:

APPROVAL RECOMMENDED:

Wayne E. Lee, P.E., CFM / Director Engineering

APPROVED AS TO FORM:
THE LAW FIRM OF ABERNATHY, ROEDER, BOYD & HULLETT, P.C.

BY:
Ryan D. Pittman
City Attorney

CORPORATE ACKNOWLEDGMENT

THE STATE OF TEXAS §
§
COUNTY OF Denton §

BEFORE ME, the undersigned authority, a Notary Public in and for said County and State, on this day personally appeared Amy Brothers of GEOTEX Engineering, LLC known to me to be the person and officer whose name is subscribed to the foregoing instrument and acknowledged to me that the same was the act of the said GEOTEX Engineering, LLC, a corporation, that (s)he was duly authorized to perform the same by appropriate resolution of the board of directors of such corporation for the purposes and consideration therein expressed, and in the capacity therein stated.

GIVEN UNDER MY HAND AND SEAL OF OFFICE this the 1st day of November, A.D. 2023.

Tammy Renea Low
Notary Public In and For Denton County, Texas

My Commission Expires:

4-7-2027

Tammy Renea Low
My Commission Expires
4/7/2027
Notary ID128575497

RESOLUTION NO. 7005

A RESOLUTION OF THE CITY COUNCIL OF THE CITY OF SHERMAN, TEXAS, AUTHORIZING EXECUTION OF A PROFESSIONAL SERVICES AGREEMENT WITH D&S ENGINEERING LABS, LLC FOR THE ANNUAL GEOTECHNICAL ENGINEERING AND CONSTRUCTION MATERIALS TESTING; FINDING AND DETERMINING THAT THE MEETING AT WHICH THIS RESOLUTION IS PASSED WAS NOTICED AND IS OPEN TO THE PUBLIC AS REQUIRED BY LAW.

BE IT RESOLVED BY THE CITY COUNCIL OF THE CITY OF SHERMAN, TEXAS:

SECTION 1. That the City Manager be and is hereby authorized and directed, subject to all contract documents being properly completed and approved as to form and content by the City Attorney, to execute a Professional Services Agreement with D&S Engineering Labs, LLC for the Annual Geotechnical Engineering and Construction Materials Testing, in accordance with all contract documents attached hereto and made a part hereof for all purposes.

SECTION 2. That it is hereby officially found and determined that the meeting at which this resolution is passed is open to the public and that public notice of the time, place, and purpose of said meeting was given as required by law.

DULY PASSED AND APPROVED BY THE CITY COUNCIL OF THE CITY OF SHERMAN, TEXAS on this the 12th day of December 2022.

CITY OF SHERMAN, TEXAS

ATTEST:

BY: Linda Ashby
LINDA ASHBY, CITY CLERK

BY: _____
DAVID PLYLER, MAYOR

APPROVED AS TO
FORM AND CONTENT:
THE LAW FIRM OF ABERNATHY,
ROEDER, BOYD & HULLETT, P.C.

BY: _____
NAME: Ryan D. Pittman
CITY ATTORNEY

AGREEMENT

BETWEEN

THE CITY OF SHERMAN, TEXAS AND

D&S ENGINEERING LABS, LLC.

FOR

PROFESSIONAL SERVICES

Made as of the 12 day of December, 2022:

Between City: **The City of Sherman, Texas**
220 W. Mulberry Street
Sherman, Texas 75090
Telephone: (903) 892-7208

and Consultant: **D&S Engineering Labs, LLC**
4702 South Texoma Parkway
Denison, Texas 75020
Telephone: (903) 465-0333

for the following Project: **Annual Geotechnical Engineering and Construction Material Testing**

THIS AGREEMENT ("Agreement") is made and entered into by and between the City of Sherman, Texas, a home-rule municipality ("City"), and D&S Engineering Labs, LLC, a Texas corporation ("Consultant"), to be effective from and after the date as provided above. City and Consultant are at times each referred to herein as a "party" or collectively as the "parties."

WHEREAS, City desires to engage Consultant to provide professional material testing and Geotechnical engineering services for the Annual Construction Material Testing ("Project"); and

WHEREAS, Consultant desires to render such professional services ("Services") for City on the terms and conditions provided herein.

NOW, THEREFORE, KNOW ALL PERSONS BY THESE PRESENTS:

That for and in consideration of the covenants contained herein, for the mutual benefits to be obtained hereby and for other good and valuable consideration, the receipt and sufficiency of which are hereby acknowledged, the parties agree as follows:

ARTICLE 1
CONSULTANT'S SERVICES

1.1 **Employment of Consultant** – City hereby agrees to retain Consultant to perform the Services in connection with the Project. Consultant agrees to perform the Services in accordance with the terms and conditions of this Agreement. Consultant further agrees that if any employee of Consultant who is performing the day-to-day Services under this Agreement for the Project is separated, for any reason, from employment with Consultant, Consultant shall provide City with written notice thereof at least five (5) business days' prior to said separation unless circumstances reasonably warrant a shorter notice period, which shall not exceed two (2) business days following the separation.

1.2 **Scope of Services** – The parties agree that Consultant shall perform the Services as are set forth and described in **Exhibit A**, attached hereto and incorporated herein by reference for all purposes ("Scope of Services"). The parties understand and agree that deviations or modifications to the Scope of Services described in **Exhibit A**, in the form of a written amendment to this Agreement, may be authorized from time to time by City ("Amendment(s)").

1.2.1 **Requirement of Written Amendment** – "Extra" work, "claims" invoiced as "extra" work or "claims" which have not been issued as a duly executed, written Amendment by the City of Sherman Director of Engineering or designee will not be authorized for payment and/or shall not become part of this Agreement. A duly executed, written Amendment requiring additional funding of $50,000 or more of the original contract amount shall be preceded by the Sherman City Council's authorization for the Sherman City Manager to execute said Amendment.

1.2.2 **CONSULTANT SHALL NOT PERFORM ANY "EXTRA" WORK AND/OR ADDITIONAL SERVICES WITHOUT A DULY EXECUTED, WRITTEN AMENDMENT ISSUED BY THE CITY**.

1.3 **Schedule of Work** – Consultant agrees to commence work immediately on the execution of this Agreement, and to proceed diligently with said work to completion as described in the Annual Geotechnical Engineering and Construction Material Testing Fee Schedule, attached hereto as **Exhibit B** and incorporated herein by reference for all purposes.

1.4 **Standard of Care** – Consultant shall perform the Services required hereunder in accordance with the prevailing engineering standard of care by exercising the skill

and care ordinarily utilized by engineers performing the same or similar services under the same or similar circumstances in the State of Texas.

ARTICLE 2
CITY'S RESPONSIBILITIES

City shall do the following in a timely manner so as not to delay the Services of Consultant:

2.1 **Project Data** – City shall furnish required information that is reasonably requested by Consultant and that City has in its possession at the time of Consultant's request, as expeditiously as necessary for the orderly progress of the Project, and Consultant shall be entitled to rely upon the accuracy and completeness of the information furnished by City under this Article 2.1.

2.2 **City Project Manager** – When necessary in City's sole discretion, City shall designate a representative authorized to act on City's behalf with respect to the Project ("Project Manager"). City, the Project Manager and/or his or her authorized designee shall examine the documents submitted by Consultant and shall render any required decisions pertaining thereto as soon as practicable to avoid unreasonable delay in the progress of Consultant's Services.

ARTICLE 3
CONSULTANT'S COMPENSATION

3.1 **Compensation for Consultant's Services** – As described in "Article 1, Consultant's Services" of this Agreement, compensation for this Project shall be: (a) on an time and material per project basis for a contract estimated amount of **Two Hundred and seventy five Thousand Dollars ($275,000.00)** ("Consultant's Fee"); and (b) paid in accordance with this Article 3 and the Annual Geotechnical Engineering and Construction Material Testing Fee Schedule as set forth in **Exhibit B**.

3.2 **Direct Expenses** – Direct Expenses ("Direct Expenses") are included in Consultant's Fee as described in Article 3.1 of this Agreement and include actual reasonable and necessary expenditures made by Consultant and Consultant's employees and subcontractors in the interest of the Project. All submitted Direct Expenses are to be within the amounts as stated in the Annual Geotechnical Engineering and Construction Material Testing Fee Schedule set forth in **Exhibit B**, and consistent with **Exhibit C**, Guidelines for Direct Expenses; General and Administrative Markup; Travel and Subsistence Expenses, which is attached hereto and incorporated herein by reference for all purposes. Consultant shall be solely responsible for the auditing and accuracy of all Direct Expenses, including those of its subcontractors, prior to submitting to City for reimbursement. Any over-payment by City for errors in submittals for reimbursement may be deducted from

Consultant's subsequent payment for Services; provided, however, that this shall not be City's sole and exclusive remedy for said over-payment.

3.3 **Additional Services** – Consultant shall provide the Services as described in the Scope of Services set forth in **Exhibit A** of this Agreement. If authorized in writing by City, Consultant shall provide additional services, to be compensated as provided in an Amendment to the Contract on a cost not to exceed sum or hourly basis in accordance with this paragraph ("Additional Services") and a mutually agreed estimate of man-hours and expenses. These services may include, but are not limited to:

3.3.1 Compensation for Additional Services authorized by City shall be in addition to Consultant's Fee and shall be based on direct billable labor rates and expenses.

3.4 **Invoices** – No payment to Consultant shall be made until Consultant tenders an invoice to City. Consultant shall submit monthly invoices for Services rendered, based upon the actual hours of work complete at the time the invoice is prepared, or shall submit invoices to City immediately upon completion of each individual task. On all submitted invoices for Services rendered, Consultant shall include appropriate background materials to support the submitted charges on said invoice. Upon request, such background material may include, but is not limited to, employee timesheets, invoices for work obtained from other parties, and receipts and/or log information relating to Direct Expenses. All invoices shall provide a summary methodology for administrative markup and/or overhead charges.

3.5 **Timing of Payment** – City shall make payment to Consultant for said invoices within thirty (30) days following receipt and acceptance thereof. The parties agree that payment by City to Consultant is considered to be complete upon mailing of payment by City. Furthermore, the parties agree that the payment is considered to be mailed on the date that the payment is postmarked.

3.6 **Disputed Payment Procedures** – In the event of a disputed or contested billing by City, only that portion so contested may be withheld from payment, and the undisputed portion will be paid. City shall notify Consultant of a disputed invoice, or portion of an invoice, in writing by the twenty-first (21st) calendar day after the date City receives the invoice. City shall provide Consultant an opportunity to cure the basis of the dispute. If a dispute is resolved in favor of Consultant, City shall proceed to process said invoice, or the disputed portion of the invoice, within the provisions of Article 3.5 of this Agreement. If a dispute is resolved in favor of City, Consultant shall submit to City a corrected invoice, reflecting any and all payment(s) of the undisputed amounts, documenting the credited amounts, and identifying outstanding amounts on said invoice to aid City in processing payment

for the remaining balance. Such revised invoice shall have a new invoice number, clearly referencing the previous submitted invoice. City agrees to exercise reasonableness in contesting any billing or portion thereof that has background materials supporting the submitted charges.

3.7 **Failure to Pay** – Failure of City to pay an invoice, for a reason other than on written notification as stated in the provisions of Article 3.6 of this Agreement, to Consultant within sixty (60) days from the date of the invoice shall grant Consultant the right, in addition to any and all other rights provided, to, upon written notice to City, suspend performance under this Agreement, and such act or acts shall not be deemed a breach of this Agreement. However, Consultant shall not suspend performance under this Agreement prior to the tenth (10th) calendar day after written notice of suspension was provided to City, in accordance with Chapter 2251, Subchapter "D" of the TEX. GOV'T CODE. City shall not be required to pay any invoice submitted by Consultant if Consultant breached any provision(s) herein.

3.8 **Project Suspension** – If the Project is suspended or abandoned in whole or in part for more than three (3) months, Consultant shall be entitled to compensation for any and all work completed to the satisfaction of City in accordance with the provisions of this Agreement prior to suspension or abandonment. In the event of such suspension or abandonment, Consultant shall deliver to City all finished or unfinished documents, data, reports, photographs and/or any other items prepared by Consultant in connection with this Agreement prior to Consultant receiving final payment. If the Project is resumed after being suspended for more than three (3) months, Consultant's compensation shall be equitably adjusted as approved by City. Any additional amounts paid to Consultant after the Project is resumed shall be agreed upon in writing by both parties before the services are performed.

ARTICLE 4
OWNERSHIP OF DOCUMENTS

4.1 **Documents Property of City** – The Project is the property of City, and Consultant may not use the documents, data, studies, reports, photographs and/or any materials for any other purpose not relating to the Project without City's prior written consent. City shall be furnished with such reproductions of the Project, data, documents, and any other information as defined in **Exhibit A**. Upon completion of the work, or any earlier termination of this Agreement under Article 3 and/or Article 8 of this Agreement, Consultant will work on the Project through the date of completion of the work, as solely determined by City, or the effective date of any earlier termination of this Agreement under Article 3 and/or Article 8 of this Agreement, and promptly furnish the same to City in an acceptable electronic format. All such reproductions shall be the property of City who may use them without Consultant's permission for any purpose relating to the Project, including, but not limited to, completion of the Project, and/or additions, alterations,

modifications, and/or revisions to the Project. Any reuse of the documents not relating to the Project shall be at City's own risk.

4.2 **Documents Subject to Laws Regarding Public Disclosure** – Consultant acknowledges that City is a governmental entity and that all documents, data, studies, reports, and/or any items prepared or furnished by Consultant (and Consultant's professional associates and/or sub-consultants) under this Agreement are instruments of service in respect of the Project and property of City. Upon completion of the Project, all of the documents, data, studies, reports, and/or any items prepared or furnished by Consultant (and Consultant's professional associates and/or sub-consultants) shall thereafter be subject to the Texas Public Information Act (Chapter 552, TEX. GOV'T CODE, as amended) and any other applicable laws requiring public disclosure of the information contained in said documents.

ARTICLE 5
CONSULTANT'S INSURANCE REQUIREMENTS

5.1 **Required General Liability Insurance** – Consistent with the terms and provisions of **Exhibit D**, Contractor Insurance Guidelines, which is attached hereto and incorporated herein by reference for all purposes, Consultant shall procure and maintain throughout the term of this Agreement, at no expense to City, a general liability insurance policy with a company that maintains a minimum rating of "A" by A.M. Best's Key Rating Guide, or other equivalent rating service(s), and is authorized to transact business in the State of Texas, in an amount not less than One Million and 00/100 Dollars ($1,000,000.00) for each occurrence, and Two Million and 00/100 Dollars ($2,000,000.00) in the aggregate. Such policy shall name City, its officers, agents, representatives, and employees as additional insureds as to all applicable coverage. Such policy shall provide for a waiver of subrogation against City for injuries, including death, property damage, or any other loss to the extent that same is covered by the proceeds of the insurance. Such policy shall require the provision of written notice to City at least thirty (30) days prior to cancellation, non-renewal or material modification of any policies, evidenced by return receipt or United States Certified Mail. Consultant shall furnish City with certificates and required endorsement(s) evidencing such coverage prior to commencing work on the Project.

5.2 **Required Professional Liability Insurance** – Consistent with the terms and provisions of **Exhibit D**, Consultant shall procure and maintain throughout the term of this Agreement, at no expense to City, a professional liability (errors and omissions) insurance policy with a company that maintains a minimum rating of "A" by A.M. Best's Key Rating Guide, or other equivalent rating service(s), and is authorized to transact business in the State of Texas, in an amount not less than One Million and 00/100 Dollars ($1,000,000.00) for each claim, and Two Million

and 00/100 Dollars ($2,000,000.00) in the aggregate. Such policy shall require the provision of written notice to City at least thirty (30) days prior to cancellation, non-renewal or material modification of any policies, evidenced by return receipt or United States Certified Mail. Consultant shall furnish City with certificates and required endorsement(s) evidencing such coverage prior to commencing work on the Project.

5.3 **Required Workers Compensation Insurance** – Consistent with the terms and provisions of **Exhibit D**, Consultant shall procure and maintain throughout the term of this Agreement, at no expense to City, all Statutory Workers Compensation Insurance as required by the laws of the State of Texas. Such insurance policy shall be with a company that maintains a minimum rating of "A" by A.M. Best's Key Rating Guide, or other equivalent service(s), and is authorized to transact business in the State of Texas. Such policy shall require the provision of written notice to City at least thirty (30) days prior to cancellation, non-renewal or material modification of any policies, evidenced by return receipt or United States Certified Mail. Consultant shall furnish City with certificates and required endorsement(s) evidencing such coverage prior to commencing work on the Project.

5.4 **Circumstances Requiring Umbrella Coverage or Excess Liability Coverage** – If the Project's size and scope warrant, and if identified on the checklist located in **Exhibit D**, Consultant shall procure and maintain throughout the term of this Agreement, at no expense to City, an umbrella coverage or excess liability coverage insurance policy with a company that maintains a minimum rating of "A" by A.M. Best's Key Rating Guide, or other equivalent rating service(s), and is authorized to transact business in the State of Texas, in an amount of Two Million and 00/100 Dollars ($2,000,000.00). Such policy shall require the provision of written notice to City at least thirty (30) days prior to cancellation, non-renewal, or material modification of any policies, evidenced by return receipt or United States Certified Mail. Consultant shall furnish City with certificates and required endorsement(s) evidencing such coverage prior to commencing work on the Project.

ARTICLE 6
CONSULTANT'S ACCOUNTING RECORDS

Records of Direct Expenses and expenses pertaining to services performed in conjunction with the Project shall be kept on the basis of generally accepted accounting principles. Invoices will be sent to City as indicated in Article 3.4 of this Agreement. Copies of employee time sheets, receipts for direct expense items and other records of Project expenses will be made available if requested.

ARTICLE 7
AUDITS AND RECORDS/VENDOR DISCLOSURE

Consultant agrees that at any time during normal business hours and as often as City may deem necessary, Consultant shall make available to representatives of City for examination all of its records with respect to all matters covered by this Agreement, and will permit such representatives of City to audit, examine, copy and make excerpts or transcripts from such records, and to make audits of all contracts, invoices, materials, payrolls, records of personnel, conditions of employment and other data relating to all matters covered by this Agreement, and for a period of four (4) years from the date of final settlement of this Agreement or for such other or longer period, if any, as may be required by applicable statute or other lawful requirement.

Consultant agrees that it is further aware of the vendor disclosure requirements set forth in Chapter 176, TEX. LOC. GOV'T CODE, as amended, and will abide by the same. In this connection, a lawful representative of Consultant shall execute and deliver to City the Conflict of Interest Questionnaire, Form CIQ, attached hereto as **Exhibit E** and incorporated herein for all purposes, no later than the Effective Date of this Agreement.

ARTICLE 8
TERMINATION OF AGREEMENT/REMEDIES

City may, upon thirty (30) days written notice to Consultant, terminate this Agreement, for any reason or no reason at all, before the termination date hereof, without prejudice to any other remedy it may have. If City terminates this Agreement due to a default of and/or breach by Consultant and the expense of finishing the Project exceeds Consultant's Fee at the time of termination, Consultant waives its right to any portion of Consultant's Fee as set forth in Article 3 of this Agreement and agrees to pay any costs over and above the fee which City is required to pay in order to finish the Project. On any default and/or breach by Consultant, City may elect not to terminate the Agreement, and in such event it may make good the deficiency in which the default consists, and deduct the costs from Consultant's Fee due Consultant as set forth in Article 3 of this Agreement. If City terminates this Agreement and Consultant is not in default of the Agreement, Consultant shall be entitled to compensation for any and all work completed to the satisfaction of City in accordance with the provisions of this Agreement prior to termination.

In the event of any termination, Consultant shall deliver to City all finished and/or unfinished documents, data, studies, surveys, drawings, maps, models, reports, photographs and/or any items prepared by Consultant in connection with this Agreement prior to Consultant receiving final payment.

The rights and remedies provided by this Agreement are cumulative, and the use of any one right or remedy by either party shall not preclude or waive its rights to use any or all other remedies. These rights and remedies are given in addition to any other rights the

parties may have by law, statute, ordinance, or otherwise.

ARTICLE 9
DISPUTE RESOLUTION/MEDIATION

In addition to all remedies at law, the parties may agree to attempt to resolve any controversy, claim or dispute arising out of or relating to the interpretation or performance of this Agreement, or breach thereof, by voluntary mediation to be conducted by a mutually acceptable mediator. However, if both parties do not agree to voluntarily mediate any such controversy, claim or dispute, mediation shall not be required.

ARTICLE 10
INDEMNITY

CONSULTANT SHALL RELEASE, DEFEND, INDEMNIFY AND HOLD HARMLESS CITY AND ITS CITY COUNCIL MEMBERS, OFFICERS, AGENTS, REPRESENTATIVES AND EMPLOYEES (COLLECTIVELY REFERRED TO AS "CITY" FOR PURPOSES OF THIS ARTICLE 10) FROM AND AGAINST ALL DAMAGES, INJURIES (WHETHER IN CONTRACT OR IN TORT, INCLUDING PERSONAL INJURY AND DEATH), CLAIMS, PROPERTY DAMAGES (INCLUDING LOSS OF USE), LOSSES, DEMANDS (REGARDLESS OF WHETHER THE ALLEGATIONS ARE FALSE, FRAUDULENT OR GROUNDLESS), SUITS, ACTIONS, JUDGMENTS, LIENS, COSTS AND EXPENSES, INCLUDING REASONABLE ATTORNEY'S FEES AND EXPENSES (INCLUDING ATTORNEY'S FEES AND EXPENSES INCURRED IN ENFORCING THIS ARTICLE 10), THAT IN WHOLE OR IN PART ARISE OUT OF OR ARE CONNECTED WITH, OR THAT ARE ALLEGED TO HAVE ARISEN OUT OF OR CONNECTED WITH, GOODS AND/OR SERVICES PROVIDED BY CONSULTANT, ITS OFFICERS, AGENTS, REPRESENTATIVES, EMPLOYEES, SUBCONTRACTORS, LICENSEES, INVITEES OR ANY OTHER THIRD PARTIES FOR WHOM CONSULTANT IS LEGALLY RESPONSIBLE (COLLECTIVELY REFERRED TO AS "CONSULTANT" FOR PURPOSES OF THIS ARTICLE 10) PURSUANT TO THIS AGREEMENT AND/OR THE NEGLIGENT, GROSSLY NEGLIGENT AND/OR INTENTIONAL WRONGFUL ACT AND/OR OMISSION OF CONSULTANT IN ITS/THEIR PERFORMANCE OF THIS AGREEMENT, REGARDLESS OF THE JOINT OR CONCURRENT NEGLIGENCE OR STRICT LIABILITY OF THE CITY (COLLECTIVELY, "CLAIMS"). THIS INDEMNIFICATION PROVISION AND THE USE OF THE TERM "CLAIMS" IS ALSO SPECIFICALLY INTENDED TO APPLY TO, BUT IS NOT LIMITED TO, ANY AND ALL CLAIMS, WHETHER CIVIL OR CRIMINAL, BROUGHT AGAINST CITY BY ANY GOVERNMENT AUTHORITY OR AGENCY RELATED TO ANY

PERSON PROVIDING SERVICES UNDER THIS AGREEMENT THAT ARE BASED ON ANY FEDERAL IMMIGRATION LAW AND ANY AND ALL CLAIMS, DEMANDS, DAMAGES, ACTIONS AND CAUSES OF ACTION OF EVERY KIND AND NATURE, KNOWN AND UNKNOWN, EXISTING OR CLAIMED TO EXIST, RELATING TO OR ARISING OUT OF ANY EMPLOYMENT RELATIONSHIP BETWEEN CONSULTANT AND ITS EMPLOYEES OR SUBCONTRACTORS AS A RESULT OF THAT SUBCONTRACTOR'S OR EMPLOYEE'S EMPLOYMENT AND/OR SEPARATION FROM EMPLOYMENT WITH THE CONSULTANT, INCLUDING BUT NOT LIMITED TO ANY DISCRIMINATION CLAIM BASED ON SEX, SEXUAL ORIENTATION OR PREFERENCE, RACE, RELIGION, COLOR, NATIONAL ORIGIN, AGE OR DISABILITY UNDER FEDERAL, STATE OR LOCAL LAW, RULE OR REGULATION, AND/OR ANY CLAIM FOR WRONGFUL TERMINATION, BACK PAY, FUTURE WAGE LOSS, OVERTIME PAY, EMPLOYEE BENEFITS, INJURY SUBJECT TO RELIEF UNDER THE WORKERS' COMPENSATION ACT OR WOULD BE SUBJECT TO RELIEF UNDER ANY POLICY FOR WORKERS COMPENSATION INSURANCE, AND ANY OTHER CLAIM, WHETHER IN TORT, CONTRACT OR OTHERWISE. CONSULTANT IS EXPRESSLY REQUIRED TO DEFEND CITY AGAINST ALL SUCH CLAIMS; PROVIDED, HOWEVER, THAT IF A COURT OF COMPETENT JURISDICTION SIGNS A JUDGMENT THAT BECOMES FINAL AND NON-APPEALABLE, DETERMINING THAT THE CITY (WITHOUT WAIVING ANY GOVERNMENTAL IMMUNITY) HAS JOINT, CONCURRENT OR SOLE NEGLIGENCE FOR THE CLAIMS IN ACCORDANCE WITH THE LAWS OF THE STATE OF TEXAS ("JUDGMENT"), THEN CONSULTANT IS NOT REQUIRED TO INDEMNIFY OR DEFEND CITY TO THE EXTENT OF THE NEGLIGENCE APPORTIONED TO CITY FOR EACH CAUSE(S) OF ACTION IDENTIFIED IN THE JUDGMENT. IN THE EVENT THE JUDGMENT PROVIDES THAT CITY IS JOINTLY, CONCURRENTLY OR SOLELY NEGLIGENT FOR THE CLAIMS REFERRED TO THEREIN, CITY AGREES TO REIMBURSE CONSULTANT FOR ALL REASONABLE AND NECESSARY COSTS INCURRED AND PAID BY CONSULTANT THAT ARE ATTRIBUTABLE TO CITY'S PERCENTAGE OF JOINT, CONCURRENT OR SOLE NEGLIGENCE, AS SET FORTH IN THE JUDGMENT, INCLUDING REASONABLE AND NECESSARY ATTORNEY'S FEES AND EXPENSES, WITHIN SIXTY (60) DAYS OF THE DATE THE JUDGMENT BECOMES FINAL AND NON-APPEALABLE. IF THIS AGREEMENT IS A CONTRACT FOR ENGINEERING OR ARCHITECTURAL SERVICES, THEN CONSULTANT'S INDEMNITY AND DEFENSE OBLIGATIONS UNDER THIS ARTICLE 10 ARE LIMITED BY, AND TO BE READ AS COMPLYING WITH, SECTION 271.904 OF THE TEXAS LOCAL GOVERNMENT CODE.

IN ITS SOLE DISCRETION, CITY SHALL HAVE THE RIGHT TO APPROVE OR SELECT DEFENSE COUNSEL TO BE RETAINED BY CONSULTANT IN FULFILLING ITS OBLIGATION HEREUNDER TO DEFEND AND INDEMNIFY CITY, UNLESS SUCH RIGHT IS EXPRESSLY WAIVED BY CITY IN WRITING. CITY RESERVES THE RIGHT TO PROVIDE A PORTION OR ALL OF ITS OWN DEFENSE; HOWEVER, CITY IS UNDER NO OBLIGATION TO DO SO. ANY SUCH ACTION BY CITY IS NOT TO BE CONSTRUED AS A WAIVER OF CONSULTANT'S OBLIGATION TO DEFEND CITY OR AS A WAIVER OF CONSULTANT'S OBLIGATION TO INDEMNIFY CITY PURSUANT TO THIS AGREEMENT. CONSULTANT SHALL RETAIN CITY-APPROVED DEFENSE COUNSEL WITHIN SEVEN (7) BUSINESS DAYS OF CITY'S WRITTEN NOTICE THAT CITY IS INVOKING ITS RIGHT TO DEFENSE OR INDEMNIFICATION UNDER THIS AGREEMENT. IF CONSULTANT FAILS TO RETAIN COUNSEL WITHIN SUCH TIME PERIOD, CITY SHALL HAVE THE RIGHT TO RETAIN DEFENSE COUNSEL ON ITS OWN BEHALF, AND CONSULTANT SHALL BE LIABLE FOR ALL COSTS INCURRED BY CITY. THE RIGHTS AND OBLIGATIONS CREATED BY THIS ARTICLE SHALL SURVIVE TERMINATION OF THIS AGREEMENT.

ARTICLE 11
NOTICES

Any notice provided or permitted to be given under this Agreement must be in writing and may be served by depositing the same in the United States Mail, addressed to the party to be notified, postage pre-paid and registered or certified with return receipt requested; by facsimile; by electronic mail, with documentation evidencing the addressee's receipt thereof; or by delivering the same in person to such party a via hand-delivery service, or any courier service that provides a return receipt showing the date of actual delivery of same to the addressee thereof. Notice given in accordance herewith shall be effective upon receipt at the address of the addressee. For purposes of notification, the addresses of the parties shall be as follows:

If to City, addressed to:
Wayne E. Lee, P.E., CFM
Director of Engineering
City of Sherman
220 W Mulberry St.
Sherman, TX 75091
Telephone: (903) 892-7327
Email: waynel@cityofsherman.com

With a copy to:

Abernathy, Roeder, Boyd & Hullett, P.C.
Attention: Ryan D. Pittman
1700 Redbud Blvd., Suite 300
McKinney, Texas 75069
Telephone: (214) 544-4000
Facsimile: (214) 544-4054
Email: rpittman@abernathy-law.com

If to Consultant, addressed to:

Amy Brothers, P.E.
President
D&S Engineering labs, LLC.
4702 South Texoma Parkway
Denison, Texas 75020
Telephone: (903) 465-0333
Email: abrothers@dsenglabs.com

ARTICLE 12
MISCELLANEOUS

12.1 **Complete Agreement** – This Agreement, including the exhibits hereto labeled "A" through "E," all of which are incorporated herein for all purposes, constitute the entire Agreement by and between the parties regarding the subject matter hereof and supersedes all prior and/or contemporaneous written and/or oral understandings. This Agreement may not be amended, supplemented, and/or modified except by written agreement duly executed by both parties. The following exhibits are attached below and made a part of this Agreement:

12.1.1 **Exhibit A**, Scope of Services.

12.1.2 **Exhibit B**, Annual Construction Material Testing Budget Summary.

12.1.3 **Exhibit C**, Guidelines for Direct Expenses; General and Administrative Markup; Travel and Subsistence Expenses.

12.1.4 **Exhibit D**, Contractor Insurance Guidelines.

12.1.5 **Exhibit E**, Conflict of Interest Questionnaire, Form CIQ.

To the extent that **Exhibit A**, **Exhibit B**, **Exhibit C**, **Exhibit D**, **or Exhibit E**, are in conflict with provisions of this Agreement or each other, the provisions of this Agreement, then the provisions of **Exhibit C**, **Exhibit D**, **Exhibit E**, **Exhibit B** or **Exhibit A** shall prevail in that order.

12.2 **Assignment and Subletting** – Consultant agrees that neither this Agreement nor the work to be performed hereunder will be assigned or sublet without the prior written consent of City. Consultant further agrees that the assignment or subletting of any portion or feature of the work or materials required in the performance of this Agreement shall not relieve Consultant of its full obligations to City as provided by this Agreement. All such approved work performed by assignment or subletting shall be billed through Consultant, and there shall be no third party billing.

12.3 **Attorney's Fees** – If either party files any action or brings any proceeding against the other arising from this Agreement, then as between City and Consultant, the prevailing party shall be entitled to recover as an element of its costs of suit, and not as damages, reasonable and necessary attorneys' fees and litigation expenses both at trial and on appeal, subject to the limitations set forth in TEX. LOC. GOV'T CODE § 271.153, as it exists or may be amended, if applicable.

12.4 **Successors and Assigns** – City and Consultant, and their respective partners, assigns, successors, subcontractors, executors, officers, agents, employees, representatives and administrators are hereby bound to the terms and conditions of this Agreement.

12.5 **Savings/Severability** – In the event of a term, condition, or provision of this Agreement is determined to be invalid, illegal, void, unenforceable, or unlawful by a court of competent jurisdiction, then that term, condition, or provision, shall be deleted and the remainder of the Agreement shall remain in full force and effect as if such invalid, illegal, void, unenforceable or unlawful provision had never been contained in this Agreement.

12.6 **Governing Law/Venue** – This Agreement shall be governed by and construed in accordance with the laws of the State of Texas, without regard to conflict of law principles. The exclusive venue for any action arising out of this Agreement shall be a court of appropriate jurisdiction in Grayson County, Texas.

12.7 **Execution/Consideration** – This Agreement is executed by the parties hereto without coercion or duress for any substantial consideration, the sufficiency of which is forever confessed.

12.8 **Authority** – The individuals executing this Agreement on behalf of the respective parties below represent to each other that all appropriate and necessary action has been taken to authorize the individual who is executing this Agreement to do so for and on behalf of the party for which his or her signature appears, that there are no other parties or entities required to execute this Agreement in order for the same to be an authorized and binding agreement on the other party for whom the individual is signing this Agreement and that each individual affixing his or her

signature hereto is authorized to do so, and such authorization is valid and effective on the date hereof.

12.9 **Waiver** – Waiver by either party of any breach of this Agreement, or the failure of either party to enforce any of the provisions of this Agreement, at any time, shall not in any way affect, limit, or waive such party's right thereafter to enforce and compel strict compliance.

12.10 **Headings** – The headings of the various sections of this Agreement are included solely for convenience of reference and are not to be full or accurate descriptions of the content thereof.

12.11 **Multiple Counterparts** – This Agreement may be executed in a number of identical counterparts, each of which shall be deemed an original for all purposes. An electronic mail and/or facsimile signature will also be deemed to constitute an original if properly executed and delivered to the other party.

12.12 **Immunity** – It is expressly understood and agreed that, in the execution and performance of this Agreement, City has not waived, nor shall be deemed to have waived, any immunity, governmental, sovereign and/or official, or defense that is available to it against claims arising in the exercise of governmental powers and functions. By entering into this Agreement, the parties do not create any obligations, express or implied, other than those set forth in this Agreement.

12.13 **Incorporation of Recitals** – The representations, covenants and recitations set forth in the foregoing recitals of this Agreement are true and correct and are incorporated into the body of this Agreement and adopted as findings of City and the authorized representative of Consultant.

12.14 **Additional Representations** – Each signatory represents this Agreement has been read by the party for which this Agreement is executed and that such party has had the opportunity to confer with its counsel.

12.15 **Miscellaneous Drafting Provisions** – This Agreement shall be deemed drafted equally by all parties hereto. The language of all parts of this Agreement shall be construed as a whole according to its fair meaning, and any presumption or principle that the language herein is to be construed against any party shall not apply.

12.16 **No Third Party Beneficiaries** – Nothing in this Agreement shall be construed to create any right in any third party not a signatory to this Agreement, and the parties do not intend to create any third party beneficiaries by entering into this Agreement.

12.17 **Indemnity** – The parties agree that the Indemnity provision set forth in Article 10 of this Agreement is conspicuous and the parties have read and understood the same.

12.18 **Representations** – All representations and covenants made by one party to the other in this Agreement or in any certificate or other instrument delivered by one party to the other under this Agreement shall be considered to have been relied upon by the other party and will survive the satisfaction of any fees under this Agreement, regardless of any investigation made by either party.

12.19 **Independent Contractor** – In performing this Agreement, Consultant shall act as an independent contractor with respect to City. In no event shall this Agreement be construed as establishing a partnership, joint venture or similar relationship between the parties and nothing herein shall authorize either party to act as agent for the other. Consultant shall be liable for its own debts, obligations, acts and omissions, including the payment of all required withholding, social security and other taxes and benefits with respect to all of Consultant's officers, directors, partners, employees and representatives, who shall not be considered City employees and shall not be eligible for any employee benefit plan offered by City.

12.20 **Debarment/Suspension** – City is prohibited from making any award or permitting any award at any tier to any party which is debarred or suspended or otherwise excluded from or ineligible for participation in federal assistance programs under Executive Order 12549, Debarment and Suspension. City, Consultant and Consultant's subcontractors shall comply with federal and state regulations regarding debarment and suspension. Consultant shall include a statement of compliance with federal and state debarment and suspension regulations in all third-party agreements for work on the Project.

12.21 **Restrictions on Lobbying** – City and Consultant are prohibited from using funds awarded under the Agreement for lobbying purposes. Consultant shall include a statement of compliance with this provision in applicable procurement solicitations and third-Party agreements for work on the Project.

12.22 **Appropriation of Funds** – Funds are not presently budgeted for City's performance under this Agreement beyond the end of City's 2022-2023 fiscal year. City will give Consultant sixty (60) days' notice if funds for City's performance are not budgeted to continue beyond that time. City shall have no liability for payment of any money for services performed after the end of City's 2022-2023 fiscal year unless and until such funds are budgeted.

12.23 **Reference to Consultant** – When referring to "Consultant," this Agreement shall refer to and be binding upon Consultant, and its officers, directors, partners,

employees, representatives, contractors, subcontractors, licensees, invitees, agents, successors, assignees (as authorized herein), vendors, grantees, trustees, legal representatives and/or any other third parties for whom Consultant is legally responsible.

1224 **Reference to City** – When referring to "City," this Agreement shall refer to and be binding upon City, its Council members, officers, agents, representatives, employees and/or any other authorized third parties for whom City is legally responsible.

IN WITNESS WHEREOF, the parties have executed this Agreement and caused this Agreement to be effective on the date set forth in the introductory clause of this Agreement.

CITY:
City of Sherman, Texas,
a Texas home-rule municipality

By: _____
Robby Hefton, City Manager

CONSULTANT:
D&S Engineering Labs, LLC
a Texas corporation

By: _____
Amy Brothers, President

APPROVED AS TO FORM:

_____
Abernathy, Roeder, Boyd & Hullett, P.C.
Ryan D. Pittman, City Attorneys

STATE OF TEXAS §
§
COUNTY OF Denton §

BEFORE ME, THE UNDERSIGNED AUTHORITY, ON THIS DAY PERSONALLY APPEARED **AMY BROTHERS** KNOWN TO ME TO BE ONE OF THE PERSONS WHOSE NAMES ARE SUBSCRIBED TO THE FOREGOING INSTRUMENT; HE ACKNOWLEDGED TO ME THAT HE IS THE PRESIDENT AND DULY AUTHORIZED REPRESENTATIVE FOR **D&S ENGINEERING LABS, LLC**, AND THAT HE EXECUTED SAID INSTRUMENT FOR THE PURPOSES AND CONSIDERATION THEREIN EXPRESSED.

GIVEN UNDER MY HAND AND SEAL OF OFFICE THIS 8th DAY OF December 2022.

Tammy Renea Low

NOTARY PUBLIC IN AND FOR THE STATE OF TEXAS
My commission expires: 4-7-2023

TAMMY RENEA LOW
Notary Public, State of Texas
Comm. Expires 04-07-2023
Notary ID 128575497

I. PROJECT DESCRIPTION

The City of Sherman desires to retain an outside Consultant to assist the City in providing Geotechnical Engineering and Construction Material Testing. The scope of services of the testing tasks are but not limited to the following:

- Geotechnical Engineering:
  - Laboratory testing of soils
  - Drilling, Sampling & Field Testing
  - Pavement and subgrade design
- Construction Material Testing:
  - Concrete testing
  - Masonry testing
  - Aggregate testing
  - Soils testing
  - Asphalt testing
  - Structural Steel Inspection

EXHIBIT B
ANNUAL GEOTECHNICAL ENGINEERING AND CONSTRUCTION MATERIAL TESTING FEE SCHEDULE

Compensation will be billed on the below fee schedule. An estimated budget of **Two Hundred and Seventy Five Thousand ($275,000.00)** is established for a twelve (12) month period and may be renewed at the mutual agreement of the City and Consultant. Below is the D&S Engineering Labs Fee Schedule for the period of this contract.

D&S Engineering Labs Hourly Fee Schedule

Geotechnical Engineering Services

Position	Hourly Rate
Expert Witness	$525.00
Principal	$235.00
Geotechnical Project Manager	$185.00
Sr. Geotechnical Project Engineer (P.E.)	$175.00
Sr. Geologist (P.G.)	$145.00
Staff Geotechnical Engineer (P.E.)	$125.00
Engineering Intern (E.I.T.)/Geologist (G.I.T.)	$100.00
CADD/Drafting	$85.00
Administrative	$75.00

Testing Service Fees

Position	Hourly Rate
Principal	$225.00
Senior CMET Engineer (P.E.)	$165.00
Senior Geologist (P.G.)	$140.00
Staff CMET Engineer (P.E.)	$125.00
CMET Operations Manager	$150.00
CMET Project Manager	$115.00
CMET Engineering Intern (EIT)/Geologist (GIT)	$100.00
Quality Control	$100.00
Administrative	$75.00

EXHIBIT B

Miscellaneous Fees

Project Coordination/Report Preparation	10% of Invoice
New Project Set up	$100
Project Management	10% of Invoice
Vehicle Transport Fees	
Within 30 miles	$50
Over 30 miles (additional rate per mile, round trip)	$0.65
Per Diem (Lodging & Food), per day (may vary with location)	$150
Project Completion Letters (please notify D&S at beginning of project if required), per hour	$165

EXHIBIT C
CONSULTANT'S GUIDELINES FOR DIRECT EXPENSES; GENERAL AND ADMINISTRATIVE MARKUP; TRAVEL AND SUBSISTENCE EXPENSES

I. **CONSULTANT'S RESPONSIBILITY**. Consultant shall be solely responsible for the auditing and accuracy of all Direct Expenses, approved markup (general and/or administrative), and approved travel and/or subsistence charges, including those of its subcontractors, prior to submitting to City for reimbursement. Any over-payment by City for errors in submittals for reimbursement may be deducted from Consultant's subsequent payment(s) for services; however, this shall not be City's sole and exclusive remedy for said over-payment.

II. **GUIDELINES FOR DIRECT EXPENSES**.

A. **Local Transportation** – Transportation in connection with the Project, when such transportation is not a function of routine performance of the duties of Consultant in connection with the Project, and when such transportation exceeds beyond thirty (30) miles from the Project site, shall be reimbursed, per EXHIBIT B.

Under no circumstances are charges associated with rental cars for local transportation eligible for reimbursement by City. Toll road subscriptions or toll plaza receipts are not reimbursable. Consultant agrees to place these standards in all subcontracts for work on the Project.

B. **Supplies, Material, Equipment** – City shall reimburse the actual cost of other similar direct Project-related expenses, which are duly presented in advance and approved by City's Project Manager in writing.

C. **Commercial Reproduction** – City shall reimburse the actual cost of reproductions, specifically limited to progress prints prepared for presentation to City at each phase of progress, and final Construction Documents prepared for distribution at bidding phase, provided that Consultant has duly obtained at least three (3) quotations from commercial firms and has chosen the best value for City. Consultant shall provide such documentation to City for review prior to submitting these expenses for reimbursement. Consultant agrees to place these standards in all subcontracts for work on the Project.

D. **In-House Reproduction** – Consultant shall make arrangements with City for prior approval of in-house reproduction rates prior to submitting these expenses for reimbursement. City shall provide Consultant with a standard format for documenting these charges. Completion of City's reproduction log is required as a prerequisite for payment, including the number or reproductions, the date, time, description, the approved standard rate, and a justification for each submitted expense for reimbursement. Consultant agrees to place these standards in all subcontracts for work on the Project.

E. **Commercial Plotting** – City shall reimburse the actual cost of plots, specifically limited to final documents, provided Consultant has duly obtained at least three (3) quotations from commercial firms and has chosen the best value for City. Consultant shall provide such documentation to City for review prior to submitting these expenses for reimbursement. Consultant agrees to place these standards in all subcontracts for work on the Project.

F. **In-House Plotting** – Consultant shall make arrangements with City for prior written approval of in-house plotting rates prior to submitting these charges for reimbursement. City shall provide Consultant with a standard format for documenting these charges. Completion of City's reproduction log is required as a prerequisite for payment, including the number of plots, the date, time, description, the approved standard rate, and a justification for each submitted charge for reimbursement.

G. **Communications** – Reimbursement for expenses relating to electronic communications shall be limited to long-distance telephone or fax toll charges specifically required in the discharge of professional responsibilities related to the Project. Telephone service charges including office or cellular phones, WATTS, or Metro line services or similar charges are not reimbursable.

H. **Postage, Mail, and Delivery Service** – City shall reimburse the actual cost of postage and delivery of Instruments of Service, provided Consultant duly considers all circumstances (including available time for assured delivery) of the required delivery and selects the best value for City, which may require comparison of delivery costs offered by three (3) or more sources or methods of delivery, which at a minimum shall include U.S. Mail. Courier service is acceptable only in circumstances requiring deadline-sensitive deliveries and not for the convenience of Consultant and/or Consultant's employees. Consultant agrees to place these standards in all subcontracts for work on the Project.

I. **Meals and Other Related Charges** – Meals or any other related expenses are not reimbursable unless incurred outside a fifty (50) mile radius of the Project, and then only reimbursable for the actual cost subject to compliance with City's currently adopted policy. Non-allowable costs include, but are not limited to, charges for entertainment, alcoholic beverages, and gratuities.

III. GUIDELINES FOR GENERAL AND ADMINISTRATIVE MARKUP.

A. **Requirement of Prior Approval** – Consultant may be allowed to charge a General and/or Administrative Markup on work completed if Consultant can clearly define to City specifically what costs are included in the markup calculation. To apply General and/or Administrative Markup, Consultant must also document to City what costs would be considered direct costs. City shall issue approval in writing to allow Consultant to charge General and/or Administrative Markup. City reserves the right to reject any and all requests for General and/or Administrative Markup.

IV. GUIDELINES FOR TRAVEL AND SUBSISTENCE EXPENSES.

A. **Requirement of Prior Approval** – City shall reimburse the actual cost of travel and/or subsistence expenses upon prior written approval by City's Project Manager.

B. **Adherence to Currently Adopted City Travel Policy** – Reimbursements shall be governed by the same travel policies provided for City employees according to current adopted policy. Prior to the event, Consultant shall request, and City's Project Manager shall provide the provisions and the restrictions that apply to out-of-town reimbursements.

EXHIBIT D
CONSULTANT'S INSURANCE GUIDELINES

I. **GENERAL INSURANCE REQUIREMENTS** –

A. All policies shall name the City of Sherman, its officers, agents, representatives and employees as additional insured as to all applicable coverage with the exception of workers compensation insurance and professional liability insurance.

B. Such policies shall require the provision of written notice to City at least thirty (30) days prior to cancellation, non-renewal or material modification of any policies, evidenced by return receipt or United States Certified Mail.

C. Such policies shall provide for a waiver of subrogation against City for injuries, including death, property damage or any other loss to the extent the same is covered by the proceeds of the insurance.

II. **INSURANCE COMPANY QUALIFICATION** – All insurance companies providing the required insurance shall be authorized to transact business in the State of Texas, and shall have a minimum rating of "A" by A.M. Best's Key Rating Guide, or other equivalent rating service(s).

III. **CERTIFICATE OF INSURANCE** – A Certificate of Insurance and policy endorsement(s) evidencing the required insurance shall be submitted prior to execution of the Agreement. If the Agreement is renewed or extended by City, a Certificate of Insurance and policy endorsement(s) shall also be provided to City prior to the date the Agreement is renewed or extended.

IV. **INSURANCE CHECKLIST** – "X" means that the following coverage(s) is required for this Agreement.

		Coverage Required	Limits
X	1.	Worker's Compensation & Employer's Liability	▪ Statutory Limits of the State of Texas
X	2.	General Liability	▪ Minimum $1,000,000.00 each occurrence; ▪ Minimum $2,000,000.00 in the aggregate
___	3.	XCU Coverage	▪ Minimum $1,000,000.00 each occurrence;

			▪ Minimum $2,000,000.00 in the aggregate
X	4.	Professional Liability	▪ Minimum $1,000,000.00 each claim; ▪ Minimum $2,000,000.00 in the aggregate
X	5.	Umbrella Coverage of Excess Liability Coverage	▪ An amount of $2,000,000.00 ▪ Minimum $2,000,000.00 in the aggregate

X 6. City and its officers, agents, representatives and employees named as additional insured on General Liability Policy, as provided above. This coverage is primary to all other coverage City may possess.

X 7. General Liability Insurance provides for a Waiver of Subrogation against the City for injuries, including death, property damage, or any other loss to the extent that same is covered by the proceeds of the insurance. All insurance policies that are required to name the City as an additional insured must be endorsed to read as primary and non-contributory coverage regardless of the application of other insurance.

X 8. Thirty (30) days' notice of cancellation, non-renewal, or material change required. The words "endeavor to" and "but failure" (to end of sentence) are to be eliminated from the Notice of Cancellation provision on standard ACORD certificates.

X 9. Insurance company has a minimum rating of "A" by A.M. Best's Key Rating Guide, or other equivalent rating service(s).

X 10. The Certificate of Insurance must state the project title and bid number.

___ 11. Other Insurance Requirements (State Below):

EXHIBIT E
CONFLICT OF INTEREST QUESTIONNAIRE, FORM CIQ

CONFLICT OF INTEREST QUESTIONNAIRE
For vendor doing business with local governmental entity

FORM CIQ

This questionnaire reflects changes made to the law by H.B. 23, 84th Leg., Regular Session.

This questionnaire is being filed in accordance with Chapter 176, Local Government Code, by a vendor who has a business relationship as defined by Section 176.001(1-a) with a local governmental entity and the vendor meets requirements under Section 176.006(a).

By law this questionnaire must be filed with the records administrator of the local governmental entity not later than the 7th business day after the date the vendor becomes aware of facts that require the statement to be filed. *See* Section 176.006(a-1), Local Government Code.

A vendor commits an offense if the vendor knowingly violates Section 176.006, Local Government Code. An offense under this section is a misdemeanor.

OFFICE USE ONLY

Date Received

1 **Name of vendor who has a business relationship with local governmental entity.**

NA

2 ☐ **Check this box if you are filing an update to a previously filed questionnaire.** (The law requires that you file an updated completed questionnaire with the appropriate filing authority not later than the 7th business day after the date on which you became aware that the originally filed questionnaire was incomplete or inaccurate.)

3 **Name of local government officer about whom the information is being disclosed.**

_____
Name of Officer

4 **Describe each employment or other business relationship with the local government officer, or a family member of the officer, as described by Section 176.003(a)(2)(A). Also describe any family relationship with the local government officer. Complete subparts A and B for each employment or business relationship described. Attach additional pages to this Form CIQ as necessary.**

A. Is the local government officer or a family member of the officer receiving or likely to receive taxable income, other than investment income, from the vendor?

☐ Yes ☐ No

B. Is the vendor receiving or likely to receive taxable income, other than investment income, from or at the direction of the local government officer or a family member of the officer AND the taxable income is not received from the local governmental entity?

☐ Yes ☐ No

5 **Describe each employment or business relationship that the vendor named in Section 1 maintains with a corporation or other business entity with respect to which the local government officer serves as an officer or director, or holds an ownership interest of one percent or more.**

6 ☐ Check this box if the vendor has given the local government officer or a family member of the officer one or more gifts as described in Section 176.003(a)(2)(B), excluding gifts described in Section 176.003(a-1).

7 Amy Brothers
Signature of vendor doing business with the governmental entity

12/08/22
Date

Form provided by Texas Ethics Commission www.ethics.state.tx.us Revised 1/1/2021

SHERMAN CITY COUNCIL
Agenda Communication Form

City Council Regular Meeting Agenda Item No. H.9.

Meeting Date: 4/15/2024

Prepared By: Kim Hobbs, Quality Services Administrative Assistant

Approved By: Robby Hefton, City Manager

Caption:

**** Resolution No 7289***

Authorizing the Purchase of a new 12'x40' Manufactured Office Building from Palomar Modular Buildings for the Distribution Services Department through the Texas Local Government Purchasing Cooperative (BuyBoard).

Issue:

To consider approval of a resolution to purchase a new 12'x40' manufactured office building from BuyBoard for use within the Distribution Services Department.

Background:

The new office building will be used in the transitioning of the Meter Shop to the Distribution Services location at 805 S. East Street.

Origination:

Department of Public Works

Financial Consideration:

The new office building will be purchased from Palomar Modular Buildings for $65,116.00 through BuyBoard. Funding for this purchase is through the Distribution Services Budget.

Staff Recommendation:

It is recommended that staff be authorized to purchase the new office building from Palomar Modular Buildings through BuyBoard.

Alternatives:

As may be recommended by the City Council

Attachments:

1. Resolution No. 7289
2. City of Sherman Proposal Letter
3. Copy of City of Sherman 1240 Office Specification 3-14-24
4. BuyBoard Interlocal Participation Agreement

RESOLUTION NO. 7289

A RESOLUTION OF THE CITY COUNCIL OF THE CITY OF SHERMAN, TEXAS, AUTHORIZING THE PURCHASE OF A 12'x40' MANUFACTURED OFFICE BUILDING FROM PALOMAR MODULAR BUILDINGS FOR THE DISTRIBUTION SERVICES DEPARTMENT THROUGH THE TEXAS LOCAL GOVERNMENT PURCHASING COOOERATIVE (BUYBOARD); FINDING AND DETERMINING THAT THE MEETING AT WHICH THIS RESOLUTION IS PASSED WAS NOTICED AND IS OPEN TO THE PUBLIC AS REQUIRED BY LAW.

BE IT RESOLVED BY THE CITY COUNCIL OF THE CITY OF SHERMAN, TEXAS:

SECTION 1. That the City Manager be and is hereby authorized and directed to purchase from Palomar Modular Buildings through Buyboard a new 12'x40' office building at a total price of Sixty-Five Thousand One Hundred and Sixteen Dollars ($65,116.00). Any agreements related to the purchase must be approved by the City Attorney. Funds for this purchase are being committed out of the City of Sherman's fiscal year 2023-2024 budget.

SECTION 2. That it is hereby officially found and determined that the meeting at which this resolution is passed is open to the public and that public notice of the time, place, and purpose of said meeting was given as required by law.

DULY PASSED AND APPROVED BY THE CITY COUNCIL OF THE CITY OF SHERMAN, TEXAS on this the 15th day of April 2024.

CITY OF SHERMAN, TEXAS

BY: _____
DAVID PLYLER, MAYOR

ATTEST:

BY: _____
LINDA ASHBY, CITY CLERK

APPROVED AS TO FORM AND CONTENT:
THE LAW FIRM OF
ABERNATHY,
ROEDER, BOYD & HULLETT, P.C.

BY: _____
RYAN D. PITTMAN, CITY ATTORNEY

505 North I-35 East, DeSoto, Texas 75115 P 469.727.0727 F 469.727.0728 866.912.4587
www.palomarmodularbuildings.com

March 14, 2024

Jayson Risner
City of Sherman
Utilities Superintendent
Sherman, TX

Thank you for your interest in Palomar Modular Buildings LLC. The price reflected below for new 12'x40' (nominal dimensions) Office Building, manufactured, delivered, and set in Sherman, TX is based on the attached specifications.

1. The purchase price as specified is **$65,116.** The purchase price does not include poured concrete footers, canopies, handicap ramps, steps, gutters, self-contained fire alarm, low voltage equipment, utility hookups, site work, taxes or permits. It is assumed that the site can support the building, is relatively level and easily accessible.

2. The building will be built in compliance with the International Building, Plumbing and mechanical codes, Americans with Disabilities Act, and the National Electric Code. The building will be engineered to meet local floor and roof load requirements and will have electrical, heating and cooling loads sized in accordance with code. Cost to comply with local codes beyond the attached floor plan and specifications is the responsibility of the owner.

3. ***Due to the volatility in lumber and other commodity markets we can only honor prices for 30 days.***

4. Prices are valid for 30 days. Our payment terms are 50% due upon execution of PO or Contract, 40% due upon completion of manufacturing, and final payment due after completion of installation by PMB set crew.

Sincerely,

Jane Tavern
Business Development
Palomar Modular Buildings LLC
O-469-727-0727
C-214-546-2843

PALOMAR
MODULAR BUILDINGS

SPECIFICATION AND STATEMENT OF WORK			
CUSTOMER	*CITY OF SHERMAN*	LAYOUT	*12' X 40' NOMINAL*
DESTINATION	*SHERMAN, TX*	SIZE	*473*
BUILDING. TYPE	*VB*	# OF MODS	*1*
DATE	*3/14/2024*	CODES	*2015 IBC, IPC, IMC, IECC, 2014 NEC, 2012 TAS*
CONSTR TYPE / USE:	*BUSINESS*		
FLOORS			
FRAME TYPE	*OUTRIGGER SIZED TO MEET DESIGN CRITERIA*		
RUNNING GEAR	*TIRES, AXLES AND HITCHES REMOVED AND STORED UNDER UNIT, IF BUILDING IS SET LOWER THAT 34" AFG HITCH TO BE LEFT OUTSIDE BUILDING LINE.*		
WOOD JOISTS	*2X10 SYP @ 16 OC*		
INSULATION	*R-30 FIBERGLASS UNFACED FIBERGLASS BATT*		
DECKING	*3/4" STURDI-FLOOR T&G*		
MOISTURE PROTECTION	*"BOTTOM BOARD" WOVEN, REINFORCED POLY*		
FLOOR COVERING	*12 IN COMMERCIAL VINYL TILE*		
LOCATION	*T/O*		
COVE BASE	*4 IN VINYL*		
EXT. WALLS			
WOOD STUDS	*2X6 @ 16 O.C. WITH DOUBLE TOP AND SINGLE BOTTOM PLATES*		
INSULATION	*R-19 FIBERGLASS UNFACED FIBERGLASS BATT*		
EXTERIOR SHEATHING	*7/16" OSB*		
MOISTURE CONTROL	*BUILDING WRAP*		
EXTERIOR SIDING	*29 GA STEEL PRE-FINISHED, PANEL LOC +*		
VINYL GYP WALL FINISH	*5/8" VINYL COVERED GYP (VENETIAN FROST)*		
INT. WALLS			
WOOD STUDS	*2X4 @ 16 O.C. WITH DOUBLE TOP AND SINGLE BOTTOM PLATES*		
INSULATION	*R-11 UNFACED*		
VCG WALL FINISH	*5/8" VINYL COVERED GYP (VENETIAN FROST)*		
CLASS "C" FRP	*FULL HEIGHT*		
LOCATION	*RESTROOM*		
ROOF			
TYPE	*WOOD*		
STD. WOOD RAFTERS	*2X10 @ 24 OC*		
INSULATION	*R-30, UNFACED*		
DECKING	*7/16" OSB*		
FELT OR SLIP SHEET	*YES*		
METAL ROOF COVERING	*29 GA GALVALUME ROOF PANEL-LOC + OVER 1 LAYER 15# FELT*		
CEILING	*2X4 SUSPENDED CEILING, USG RADAR TILE, 15/16 GRID*		
DOORS			
EXTERIOR STEEL DOORS	*3-0 / 6-8 STEEL DOOR, KNOCK DOWN FRAME, CLOSER, PAINTED 18GA DOOR ,16GA FRAME, INSULATED*		
INTERIOR DOORS	*3-0 / 6-8 PRE FINISHED SOLID CORE WOOD DOOR / 18GA "TIMELY" KNOCK DOWN STEEL FRAME*		
DOOR GLAZING	*DOOR GLASS: 6X27" (EXT)*		
EXT DOOR HARDWARE	*PMB STANDARD LEVER/PANIC GRADE 2*		
INT DOOR HARDWARE	*LEVER-PRIVACY: GRADE 2, PMB STANDARD*		
INT DOOR HARDWARE	*LEVER-LOCKSET GRADE 2 PMB STANDARD*		
DOOR STOPS	*FLOOR MOUNTED*		
WINDOWS			
EXTERIOR WINDOWS	*3-0 / 4-0 DUAL PANE, LOW E, CLEAR GLAZING, SINGLE HUNG VINYL FRAME (SERIES 200)*		
BLINDS	*1" METAL MINI BLINDS*		
ELECTRICAL			
CONDUIT	*NON-METALLIC TUBING (ENT)*		
RECEPTACLES	*DUPLEX RECEPTACLES, 20 AMP, UNBREAKABLE COVERS*		
GFI RECEPT.	*20 AMP PER CODE*		
EXTERIOR OUTLET	*20 AMP, WEATHER PROOF*		
DEDICATED RECEPTACLES	*20A - 30A CONNECTION (30 GAL OR SMALLER WATER HEATER)*		
PANELS	*100A-200A, 10KAIC, 1P, CLIP ON BREAKERS*		
ROOM LIGHTING	*2X4 LED FIXTURES*		
EMERGENCY LIGHTS	*2 BULB LED WITH REMOTE HEAD*		
EXIT LIGHTS	*LED W/BATTERY BU*		

EXTERIOR LIGHTS	*EXTERIOR PORCH, LED AT EACH EXIT*
OCC. SENSOR, SINGLE	*PER CODE*
EMPTY BOX & CONDUITS	*STUBBED TO CEILING, 3/4"*
FIRE PROTECTION	
NIC	*NONE*
PLUMBING	
SUPPLY PIPING	*CPVC*
WASTE PIPING	*PVC/ SCH 40 DWV*
TOILETS	*HC, FLOOR MOUNTED, TANK TYPE*
LAVYS	*WALL MOUNT W/SINGLE LEVER FAUCET/TV*
SINKS	*SINGLE BOWL STAINLESS STEEL, W/SINGLE LEVER FAUCET/ TV*
WATER HEATERS	*TANKLESS: STD ELEC, (2 LAVY MAX)*
ACCESSORIES	*18" x 36" SS FRAMED MIRRORS*
ACCESSORIES	*SET HC GRAB BARS FOR HC TOILET*
ACCESSORIES	*TOILET PAPER HOLDER - SINGLE SURFACE MOUNTED*
HVAC	
STD. UNITS	*WALL MOUNTED PACKAGED HVAC WITH ELECTRIC HEAT STRIP, 1 PHASE, SIZED PER DESIGN REQUIRMENTS*
SUPPLY AIR	*DUCTED*
DUCTING	*FLEX DUCT*
RETURN AIR	*DUCTED*
THERMOSTATS	*7 DAY PROGRAMABLE WITH OCCUPANT OVERIDE*
DIFFUSERS	*ADJUSTABLE DIFFUSERS*
FILTER	*AT UNIT*
EXHAUST FANS	*80 CFM EXHAUST FAN/LIGHT COMBO*
MILLWORK & BLOCKING	
CABINETS	*BASE & OVERHEAD CABINETS, INC. PLAM COUNTER TOPS*
MISC. & ACCESSORIES	
NIC	*NONE*
SHIP LOOSE	
CLOSE UP	*CLOSE-UP PLASTIC FOR SKIRTING OR BELLY BAND*
SKIRT FRAMING	*PRESSURE TREATED WOOD FRAMING (36" HT)*
SKIRTING	*29 GA METAL*
SET UP	*ANCHORS, AUGER, STRAPS, CLIPS*
SET UP	*2" X 8" PT SHIMS & OAK WEDGES*
NOTES	
SITE WORK	
	DELIVERY, SET AND SKIRT

PALOMAR MODULAR BUILDINGS (PMB)

CLARIFICATIONS

ALL MATERIALS AND EQUIPMENT PROVIDED FOR THE CONSTRUCTION OF THIS PROPOSED PROJECT WILL BE OF TYPICAL QUALITY AND DURABILITY FOR SIMILAR TYPES OF CONSTRUCTION. ANY MATERIALS LISTED WITH SPECIFIC NAME BRANDS MAY BE SUBSTITUTED FOR OTHER BRANDS OF COMPARABLE QUALITY.

PALOMAR MODULAR BUILDINGS (PMB) MANAGEMENT'S PROPOSAL IS BASED ON THESE WRITTEN SPECIFICATIONS AND STATEMENT OF WORK PROVIDED

CUSTOMER IS RESPONSIBLE FOR ALL PERMITS INCLUDING BUILDING PERMITS, LICENSING COSTS AND IMPACT FEES. PMB WILL BE RESPONSIBLE FOR ALL PERMITS REQUIRED FOR TRANSPORTATION OF THE MODULES OVER THE ROAD.
BUILDING FOOTPRINT NEEDS TO BE WITHIN 12" OF LEVEL IN A 60' SPAN

CUSTOMER WILL PROVIDE AN APPROPRIATE GRADED AND COMPACTED SITE AS REQUIRED FOR THE SETTING OF THE MODULAR BUILDING. GRADING SHOULD PROVIDE POSITIVE DRAINAGE AWAY FROM THE BUILDING AND COMPACTIONTO A MINIMUM ALLOWABLE SOIL BEARING PRESSURE OF 2000 PSF. IT IS ASSUMED THAT THE MODULAR BUILDING WILL BE SET ABOVE GRADE. PMB WILL UTILIZE ABS PADS AND STACKED CMU BLOCK PIERS TO SET THE BUILDING ON GRADE.

FINISHED FLOOR WILL BE BETWEEN 34" AND 38" ABOVE GRADE
CUSTOMER WILL PROVIDE SITE ACCESSIBILITY FOR STANDARD MODULAR INDUSTRY DELIVERY AND INSTALLATION VEHICLES
PRICES ARE VALID FOR 30 DAYS.

THE BUILDING WILL BE BUILT IN COMPLIANCE WITH THE INTERNATIONAL BUILDING CODE, AMERICANS WITH DISABILITIES ACT, AND THE NATIONAL ELECTRIC CODE. THE BUILDING WILL BE ENGINEERED TO MEET LOCAL FLOOR AND ROOF LOAD REQUIREMENTS AND WILL HAVE ELECTRICAL, HEATING AND COOLING LOADS SIZED IN ACCORDANCE WITH NEC AND IBC CODES. COST TO COMPLY WITH LOCAL CODES BEYOND THE ATTACHED FLOOR PLAN AND SPECIFICATIONS IS THE RESPONSIBILITY OF THE OWNER.

CUSTOMER WILL MAKE SITE ACCESSIBLE FOR MODULAR INDUSTRY DELIVERY VEHICLES WHEN PMB IS READY TO DELIVER MODULAR SECTIONS.
IF SITE IS NOT READY IN TIME FOR DELIVERY OF MODULES, CUSTOMER AGREES TO REIMBURSE PMB FOR TEMPORARY STORAGE, STAGING AND/OR DAMAGES WHILE MODULES ARE STORED.

SCOPE

PMB WILL MANUFACTURE ALL MODULES IN ACCORDANCE WITH STATE AND CUSTOMER APPROVED DRAWINGS
PMB WILL TRUCK SET ALL MODULAR BUILDINGS IN ACCORDANCE WITH A MUTUALLY AGREED SITE PLAN.
PMB WILL MAKE FINAL MODULAR MATE LINE STRUCTURAL CONNECTIONS AND FINISHES INCLUDING ELECTRICAL AND HVAC CROSSOVERS PROVIDED BY PMB IN THE FIELD
PMB WILL PROVIDE AND INSTALL PRESSURE TREATED WOOD FRAMING WITH SIDING TO MATCH EXTERIOR OF BUILDING INCLUDING VENTILATION & SKIRT PANEL ACCESS
ROOF SLOPE TO ACCOMMODATE MODULAR CONSTRUCTION METHODS
CUSTOMER WILL PROVIDE APPROPRIATE AND CURRENT GEOTECHNICAL INFORMATION AS REQUIRED FOR FOUNDATION LAYOUT, NO FOUNDATION DESIGN IS INCLUDED
PMB WILL PROVIDE STANDARD MODULAR STATE APPROVALS AND ENGINEERING (IF STATE HAS A MODULAR BUILDING PROGRAM)
PMB STANDARD GENERAL LIABILITY UNTIL PMB WORK IS COMPLETE.
STANDARD PMB WARRANTY INFORMATION PROVIDED AT THE COMPLETION OF THE PROJECT.
STANDARD PMB TECHNICAL INPUT (SUBMITTAL PACKAGE) PROVIDED FOR CUSTOMER REVIEW AND APPROVAL.

EXCLUSIONS
ALL UTILITIES, SITE WORK, SITE PREPARATION, ACCESS FOR MODULAR UNITS, HAULING ROADS, CRANES OR ACCESS ROADS
ADA ACCESSIBILITY
BELOW GRADE FOOTERS
FOUNDATION DESIGN
ANY AND ALL WORK NOT ASSOCIATED WITH THE MODULAR BUILDING
FINAL CONNECTION OF ALL UTILITIES
MANIFOLDING OF WASTE LINES UNDER BUILDING IF BUILDING HAS PLUMBING
FURNITURE, FIXTURES OR EQUIPMENT
CARD ACCESS READERS
LOW VOLTAGE WIRING INCLUDING, FIRE ALARM, PHONE, DATA, COAXIAL, MASS NOTIFICATION, PA SYSTEM, CCTV, SECURITY, ETC.
BUILDERS RISK INSURANCE
ANY HORIZONTAL CONDUIT FOR LOW VOLTAGE WIRING
FIRE SUPPRESSION OR FIRE ALARM SYSTEMS
FIRE EXTENGUISHER
DUMPSTER, PMB WILL PLACE TRASH AND CONSTRUCTION DEBRIS IN A CLOSE RECEPTACLE TO THE BUILDING WHICH IS PROVIDE BY THE CUSTOMER
PORT-A-POTTY
TEMPORARY ELECTRIC
TEST AND BALANCE OF THE HVAC SYSTEM
CRANES, MAN LIFTS OR FORKLIFTS
SIGNAGE
SURVEYING
STAKING OF THE SITE TO SHOW WHERE BUILDING IS GOING.
CLEANING OF ANY KIND BEYOND BROOM SWEEP
TAXES AND BONDING OF ANY KIND
LOCAL ZONING AND DEED RESTRICTIONS
PERMITS INCLUDING BUT NOT LIMITED TO BUILDING PERMITS, LICENSING COSTS AND IMPACT FEES.
PRESSURE TREATED WOOD OR METAL DECKS, STEP AND RAMPS PER ADA REQUIREMENTS
GUTTERS, DOWNSPOUTS AND SPLASH BLOCKS
CANOPIES
ASPHALT OR CONCRETE PARKING LOT, INCLUDING DRIVES, ENTRIES, CURBS, SIGNAGE, ETC. AS OR IF REQUIRED
REINFORCED CONCRETE FOR SIDE WALKS, ROADS, RAMPS, STOOPS, DECKS, STEPS AND EQUIPMENT PADS

RECEIVED JUL 15 2002

YOUR COPY

INTERLOCAL PARTICIPATION AGREEMENT

RECEIVED JUL 15 '02

for the
Texas Local Government Purchasing Cooperative

This Interlocal Participation Agreement ("Agreement") is made and entered into by and between the Texas Local Government Purchasing Cooperative ("Cooperative"), an administrative agency of cooperating local governments, acting on its own behalf and the behalf of all participating local governments, and the undersigned local government of the State of Texas ("Cooperative Member"). The purpose of this Agreement is to facilitate compliance with state bidding requirements, to identify qualified vendors of commodities, goods and services, to relieve the burdens of the governmental purchasing function, and to realize the various potential economies, including administrative cost savings, for Cooperative Members.

WITNESSETH:

WHEREAS, the Cooperative Members are authorized by Chapter 791, et seq., The Interlocal Cooperation Act of the Government Code ("the Act"), to agree with other local governments to form purchasing cooperatives; and

WHEREAS, the Cooperative is an administrative agency of local governments cooperating in the discharge of their governmental functions; and

WHEREAS, the Cooperative Member does hereby adopt the Organizational Interlocal Agreement, together with such amendments as may be made in the future, reflecting the evolving mission of the Cooperative and further agrees to become an additional party to that certain Organizational Interlocal Agreement promulgated on the 26th day of January, 1998.

NOW, THEREFORE, BE IT RESOLVED that the undersigned Cooperative Member in consideration of the agreement of the Cooperative and the Cooperative Members to provide services as detailed herein does agree to the following terms, conditions, and general provisions.

In return for the payment of the contributions and subject to all terms of this Agreement, the parties agree as follows:

TERMS AND CONDITIONS

1. **Adopt Organizational Interlocal Cooperation Agreement.** The Cooperative Member by the adoption and execution of this Agreement hereby adopts and approves the Organizational Interlocal Agreement dated January 26, 1998, together with such amendments as may be made in the future and further agrees to become a Cooperative Member.
2. **Term.** The initial term of this Agreement shall commence at 12:01 a.m. on the date executed and signed and shall automatically renew for successive one-year terms unless sooner terminated in accordance with the provisions of this Agreement. The terms, conditions, and general provisions set forth below shall apply to the initial term and all renewals.
3. **Termination.**
    a. By the Cooperative Member. This Agreement may be terminated by the Cooperative Member at any time by thirty (30) days prior written notice to the Cooperative; provided all charges owed to the Cooperative and any vendor have been fully paid.
    b. By the Cooperative. The Cooperative may terminate this Agreement by:
        1. Giving ten (10) days notice by certified mail to the Cooperative Member if the Cooperative Member fails or refuses to make the payments or contributions as herein provided; or
        2. Giving thirty (30) days notice by certified mail to the Cooperative Member.

c. Termination Procedure. If the Cooperative Member terminates its participation during the term of this Agreement or breaches this Agreement, or if the Cooperative terminates participation of the Cooperative Member under any provision of this Article, the Cooperative Member shall bear the full financial responsibility for any purchases occurring after the termination date, and for any unpaid charges accrued during its term of membership in the Cooperative. The Cooperative may seek the whole amount due, if any, from the terminated Cooperative Member. The Cooperative Member will not be entitled to a refund of membership dues paid.

4. **Payments.**
   a. The Cooperative Member agrees to pay membership fees based on a plan developed by the Cooperative. Membership fees are payable by Cooperative Member upon receipt of an invoice from the Cooperative, Cooperative Contractor or vendor. A late charge amounting to the maximum interest allowed by law, but not less than the rate of interest under Section 2251.021, et seq., Texas Government Code, shall begin to accrue daily on the 31st day following the due date and continue to accrue until the contribution and late charges are paid in full. The Cooperative reserves the right to collect all funds that are due to the Cooperative in the event of termination by Cooperative Member or breach of this Agreement by Cooperative Member.
   b. The Cooperative Member will make timely payments to the vendor for the goods, materials and services received in accordance with the terms and conditions of the Invitation to Bid and related procurement documents. Payment for goods, materials and services and inspections and acceptance of goods, materials and services ordered by the procuring party shall be the exclusive obligation of the procuring Cooperative Member.
5. **Cooperative Reporting.** The Cooperative will provide periodic activity reports to the Cooperative Member. These reports may be modified from time to time as deemed appropriate by the Cooperative.
6. **Administration.** Cooperative Member will use the BuyBoard purchasing application in accordance with instruction from the Cooperative; discontinue use upon termination of participation; maintain confidentiality and prevent unauthorized use; maintain equipment, software and testing to operate the system at its own expense; report all purchase orders generated to Cooperative or its designee in accordance with instructions of the Cooperative; and make a final accounting to Cooperative upon termination of membership.
7. **Amendments.** The Board may amend this agreement, provided that notice is sent to each participant at least 60 days prior to the effective date of any change described in such amendment which, in the opinion of the Board, will have a material effect on the Cooperative Members participation in the Cooperative.

GENERAL PROVISIONS

1. **Authorization to Participate.** Each Cooperative Member represents and warrants that its governing body has duly authorized its participation in the Cooperative.
2. **Bylaws.** The Cooperative Member agrees to abide by the Bylaws of the Cooperative, as they may be amended, and any and all reasonable policies and procedures established by the Cooperative.
3. **Compensation.** The parties agree that the payments under this Agreement and all related exhibits and documents are amounts that fairly compensate the Cooperative for the services or functions performed under the Agreement, and that the portion of gross sales paid by participating vendors enables the Cooperative to pay the necessary licensing fees, marketing costs, and related expenses required to operate a statewide system of electronic commerce for the local governments of Texas.
4. **Cooperation and Access.** The Cooperative Member agrees that it will cooperate in compliance with any reasonable requests for information and/or records made by the Cooperative. The Cooperative reserves the right to audit the relevant records of any Cooperative Member. Any breach of this Article shall be considered material and shall make the Agreement subject to termination on ten (10) days written notice to the Cooperative Member.

5. **Coordinator.** The Cooperative Member agrees to appoint a program coordinator who shall have express authority to represent and bind the Cooperative Member, and the Cooperative will not be required to contact any other individual regarding program matters. Any notice to or any agreements with the coordinator shall be binding upon the Cooperative Member. The Cooperative Member reserves the right to change the coordinator as needed by giving written notice to the Cooperative. Such notice is not effective until actually received by the Cooperative.
6. **Current Revenue.** The Cooperative Member hereby warrants that all payments, contributions, fees, and disbursements required of it hereunder shall be made from current revenues budgeted and available to the Cooperative Member.
7. **Defense and Prosecution of Claims.** The Cooperative Member authorizes the Cooperative to regulate the commencement, defense, intervention, or participation in a judicial, administrative, or other governmental proceeding or in an arbitration, mediation, or any other form of alternative dispute resolution, or other appearances of the Cooperative and/or any past or current Cooperative Member in any litigation, claim or dispute, and to engage counsel and appropriate experts, in the Cooperative's sole discretion, with respect to such litigation, claim or disputes. The Cooperative Member does hereby agree that any suit brought against the Cooperative or a Cooperative Member may be defended in the name of the Cooperative or the Member by the counsel selected by the Cooperative, in its sole discretion, or its designee, on behalf of and at the expense of the Cooperative as necessary for the prosecution or defense of any litigation. Full cooperation by the Cooperative Member shall be extended to supply any information needed or helpful in such prosecution or defense. Subject to specific revocation, the Cooperative Member hereby designates the Cooperative to act as a class representative on its behalf in matters arising out of this Agreement.
8. **Governance.** The Board of Trustees (Board) will govern the Cooperative in accordance with the Bylaws. Travis County, Texas will be the location for filing any dispute, claim or lawsuit.
9. **Limitations of Liability.** COOPERATIVE, ITS ENDORSERS (TEXAS ASSOCIATION OF SCHOOL BOARDS, TEXAS ASSOCIATION OF COUNTIES, AND TEXAS MUNICIPAL LEAGUE) AND SERVICING CONTRACTOR (TEXAS ASSOCIATION OF SCHOOL BOARDS) DO NOT WARRANT THAT THE OPERATION OR USE OF COOPERATIVE SERVICES WILL BE UNINTERRUPTED OR ERROR FREE. COOPERATIVE, ITS ENDORSERS AND SERVICING CONTRACTORS, HEREBY DISCLAIM ANY AND ALL WARRANTIES, EXPRESS OR IMPLIED, IN REGARD TO ANY INFORMATION, PRODUCT OR SERVICE FURNISHED UNDER THIS AGREEMENT, INCLUDING WITHOUT LIMITATION, ANY AND ALL IMPLIED WARRANTIES OF MERCHANTABILITY OR FITNESS FOR A PARTICULAR PURPOSE. THE PARTIES AGREE THAT IN REGARD TO ANY AND ALL CAUSES OF ACTION ARISING OUT OF OR RELATING TO THIS AGREEMENT, NEITHER PARTY SHALL BE LIABLE TO THE OTHER UNDER ANY CIRCUMSTANCES FOR SPECIAL, INCIDENTAL, CONSEQUENTIAL, OR EXEMPLARY DAMAGES, EVEN IF IT HAS BEEN ADVISED OF THE POSSIBILITY OF SUCH DAMAGES.
10. **Merger.** This Interlocal Participation Agreement, Terms and Conditions, and General Provisions, together with the Bylaws, Organizational Interlocal Agreement, and Exhibits, represents the complete understanding of the Cooperative, and Cooperative Member electing to participate in the Cooperative.
11. **Notice.** Any written notice to the Cooperative shall be made by first class mail, postage prepaid, and delivered to the Associate Executive Director Financial Planning, Texas Association of School Boards, Inc., P.O. Box 400, Austin, Texas 78767-0400.
12. **Venue.** This Agreement shall be governed by and construed in accordance with the laws of the State of Texas, and venue shall lie in Travis County, Texas.
13. **Warranty.** By the execution and delivery of this Agreement, the undersigned individuals warrant that they have been duly authorized by all requisite administrative action required to enter into and perform the terms of this Agreement.

IN WITNESS WHEREOF, the parties, acting through their duly authorized representatives, sign this Agreement as of the date indicated.

TO BE COMPLETED BY THE COOPERATIVE:
TEXAS LOCAL GOVERNMENT PURCHASING COOPERATIVE, as acting on behalf of all other Cooperative Members

By: _____ Date: 7-15-02
Gerald Brashears, Cooperative Administrator

TO BE COMPLETED BY COOPERATIVE MEMBER:

CITY OF SHERMAN, TEXAS

By: _____ Date: 5/28/2002
L. SCOTT WALL, CITY MANAGER

Coordinator for the Cooperative Member is:

Name:	MARYANN WINKLER
Address:	405 N. RUSK STREET
	SHERMAN, TEXAS 75090
Phone:	(903) 892-7285
Fax:	(903) 891-0255
Email:	PURCH@TEXOMA.NET

SHERMAN CITY COUNCIL
Agenda Communication Form

City Council Regular Meeting Agenda Item No. H.10.

Meeting Date: 4/15/2024

Prepared By: Theresa Hutchinson, Park & Recreation Manager

Approved By: Robby Hefton, City Manager

Caption:
RESOLUTION NO. 7290
Authorizing the Purchase and Installation of Lighting at Binkley Park Asphalt Pump Track from NEMA 3 Electric, Inc. under the Buy Board Purchasing Cooperative

Issue:
To extend the usage times and increase safety for pump track users in evening hours.

Background:
The Binkley Park Asphalt Pump Track opened in December 2023. The track has been very popular with hundreds of people using the track daily. The addition of lighting will extend usage time and increase safety during evening hours.

Origination:
Parks and Recreation

Financial Consideration:
This item will be purchased through the Capital Improvement Fund at a cost of $136,593.

Staff Recommendation:
Staff recommends approval.

Alternatives:
As deemed appropriate by City Council.

Attachments:
1. Resolution No. 7290
2. Signed Contract- Quote- Insurance Requirement
3. CIQ - No prohibited Interest

RESOLUTION NO. 7290

A RESOLUTION OF THE CITY COUNCIL OF THE CITY OF SHERMAN, TEXAS, AUTHORIZING THE PURCHASE AND INSTALLATION OF LIGHTING AT BINKLEY PARK ASPHALT PUMP TRACK FROM NEMA 3 ELECTRIC, INC. UNDER THE BUY BOARD PURCHASING COOPERATIVE; FINDING AND DETERMINING THAT THE MEETING AT WHICH THIS RESOLUTION IS PASSED WAS NOTICED AND IS OPEN TO THE PUBLIC AS REQUIRED BY LAW.

BE IT RESOLVED BY THE CITY COUNCIL OF THE CITY OF SHERMAN, TEXAS:

SECTION 1. that the City Manager be and is hereby authorized and directed, subject to all contract documents being properly completed and approved as to form and content by the City Attorney for the purchase and installation of lighting at Binkley Park asphalt pump track for a total cost of One Hundred Thirty-Six Thousand Five Hundred Ninety-three dollars ($136,593) through the Buy Board Purchasing Cooperative**.**

SECTION 2. That it is hereby officially found and determined that the meeting at which this resolution is passed is open to the public and that public notice of the time, place, and purpose of said meeting was given as required by law.

DULY PASSED AND APPROVED BY THE CITY COUNCIL OF THE CITY OF SHERMAN, TEXAS, on this the 15th day of April 2024.

CITY OF SHERMAN, TEXAS

ATTEST:

BY: _____ **BY:** _____
LINDA ASHBY, CITY CLERK **DAVID PLYLER, MAYOR**

APPROVED AS TO FORM AND CONTENT:
THE LAW FIRM OF ABERNATHY, ROEDER, BOYD & HULLETT, P.C.

BY: _____
RYAN D. PITTMAN, CITY ATTORNEY

CONSTRUCTION AGREEMENT BETWEEN THE CITY OF SHERMAN, TEXAS AND NEMA 3 ELECTRIC INC.

The **City of SHERMAN, Texas**, a home-rule municipality ("SHERMAN"), and NEMA 3 Electric Inc. a Texas Corporation ("Contractor"), enter into this Construction Agreement ("Agreement") for the purchase and installation of lighting at the Binkley Park Asphalt Pump Track. SHERMAN and Contractor are sometimes referred to collectively as the "parties" or individually as a "party."

WHEREAS, SHERMAN desires to engage Contractor to provide services in connection with the purchase and installation of lighting at Binkley Park Asphalt Pump Track under the terms and conditions of this Agreement ("Project");

WHEREAS, Sherman issued a Request for Quote (RFQ) through the Buyboard Cooperative Purchasing Program; and

WHEREAS, Contractor timely submitted a response to the RFQ, attached hereto as Exhibit A and incorporated herein for all purposes ("Quote"), seeking to provide such services for City; and

WHEREAS, based on Contractor's representations in response to the RFQ, including those representations set forth in the Quote, City has selected Contractor to provide the services sought in the RFQ under the terms and conditions of this Agreement ("Project").

WHEREAS, Contractor has agreed to provide the services for the Project.

NOW, THEREFORE, in consideration of the mutual agreements and covenants contained herein and other good and valuable consideration, the receipt and sufficiency of which are hereby acknowledged, the parties agree as follows:

1. Scope of Services.
Contractor shall provide the services and deliverables that are set forth and described in the Agreement Documents (hereinafter defined) and shall furnish all personnel, labor, equipment, supplies and all other items necessary to provide the services and deliverables as specified by the terms and conditions of the Agreement Documents (collectively, "Services"). The parties understand and agree that deviations or modifications to the scope of Services described in the Agreement Documents, in the form of one or more written change orders, may be authorized from time to time by SHERMAN ("Change Orders"). "Extra" work, "claims" invoiced as "extra" work or "claims" which have not been issued as a duly executed, written Change Orders by the SHERMAN City Manager or his designee will not be authorized for payment and/or shall not become part of this Agreement. A duly executed, written Change Order shall be preceded by the SHERMAN City Council's authorization for the SHERMAN City Manager to execute said Change Order. Contractor agrees that SHERMAN's project managers, superintendents and/or inspectors are not authorized to issue verbal or written Change Orders.

2. Term.
Contractor shall mobilize on-site and commence performance of the Project (the "Mobilization Date") within Ninety (90) calendar days of the Effective Date of this Agreement (hereinafter defined) and shall complete the Services within Sixty (60) calendar days of the Mobilization Date. All obligations relating to time set forth herein are material and are of the essence of this Agreement. This Agreement shall remain in full force and effect until completion of the Project to SHERMAN's satisfaction. The obligations listed hereunder shall be fulfilled upon the completion of the Project to SHERMAN's satisfaction.

3. Compensation.
In exchange for the Services as described in the Agreement Documents, SHERMAN agrees to pay the Contractor in an amount not to exceed One Hundred Thirty-Six Thousand Five Hundred Ninety-Three Dollars ($136,593.00) for the completion of the Project contemplated by and in accordance with the Agreement Documents as follows:

On a monthly basis, Contractor shall submit a written invoice to SHERMAN for all Services completed in the immediately preceding month. The applicable portion of Contractor's Fee as reflected in each such invoice shall be due and payable by SHERMAN within thirty (30) days after SHERMAN finally accepts the Services described in each such invoice in accordance with the Agreement Documents and SHERMAN's ordinances, rules, regulations and requirements, as they exist, may be amended or in the future arising, except that SHERMAN is entitled to retain an amount equal to five percent (5%) of the Contractor's Fee, which shall be due and payable within thirty (30) days after Contractor completes the Project and SHERMAN finally accepts the same. Notwithstanding anything to the contrary herein, SHERMAN shall not be required to pay any invoice submitted by Contractor if Contractor is in breach of this Agreement.

Contractor and SHERMAN acknowledge and agree that the continuation of this Agreement after the close of any given fiscal year of SHERMAN, which fiscal year ends on September 30th of each year, shall be subject to SHERMAN City Council approval. In the event that the SHERMAN City Council does not approve the appropriation of funds for this Agreement, the Agreement shall terminate at the end of the fiscal year for which funds were appropriated, and the parties shall have no further obligations hereunder, except that SHERMAN shall be obligated to pay monies owed Contractor for Services it has provided pursuant to this Agreement through the end of that fiscal year provided that Contractor is not in breach of this Agreement.

4. Agreement Documents.
The "Agreement Documents," as that term is used herein, shall mean and include the following documents, and this Agreement expressly incorporates the same herein by reference for all purposes:

a. This Agreement;

c. The Quote, attached hereto as Exhibit A;

d. SHERMAN's Insurance Requirements, attached hereto as Exhibit B;

d. City of SHERMAN's Standard Construction Details (which is on file in with the City Engineering Department);

e. The Standard Specifications for Public Works Construction (North Central Texas Third Edition 1998) as amended and supplemented by the City of SHERMAN's Special Provisions to said Standard Specification, as amended (which is on file in the City Engineering Department);

f. Affidavit of No Prohibited Interested, attached hereto as Exhibit C;

g. Conflict of Interest Questionnaire, attached hereto as Exhibit D;

This Agreement shall incorporate the terms of the Agreement Documents in their entirety. To the extent that Exhibit A, Exhibit B, Exhibit C, or Exhibit D are in conflict with provisions of this Agreement or each other, the provisions of this Agreement, then the provisions of Exhibit B, Exhibit C, Exhibit D, and Exhibit A shall prevail in that order.

5. Liquidated Damages.
Contractor acknowledges and agrees that if Contractor fails to timely perform or complete any of the Services required under the terms of the Agreement Documents, SHERMAN will sustain actual damages as a result of such failure. The exact amount of such damages will be difficult to ascertain. Therefore, the parties agree that if Contractor fails to timely perform or complete any of the Services required under the terms of the Agreement Documents, then Contractor shall pay SHERMAN the sum of one thousand and 00/100 dollars ($1,000.00) for each calendar day in which the Services are not completed, not as a penalty but as liquidated damages for the damages that would be suffered by SHERMAN as a result of delay for each and every calendar day that the Contractor shall have failed to have completed the Services as required herein.

6. Payment Bonds.
Prior to commencing work under this Agreement, Contractor shall furnish to SHERMAN a payment bond, which shall be in an amount equal to one hundred percent (100%) of the total cost of the Project to ensure SHERMAN is indemnified against any claims for nonpayment of any part of the construction or work performed in connection with the Project.

The bonds required by SHERMAN pursuant to this Section 5 must be: (i) good and sufficient bonds; (ii) in the amounts prescribed herein; and (iii) with a reputable and solvent corporate surety in favor of SHERMAN.

7. Entire Agreement.

The Agreement Documents contain all representations, understandings, contracts and agreements between the parties regarding the subject matter of this Agreement. The Agreement Documents supersede all oral or written previous and contemporaneous agreements, writings, understandings, representations or contracts between the parties regarding the subject matter of this Agreement. This Agreement in no way modifies or supersedes any document executed by the parties prior to the Effective Date of this Agreement which does not concern the subject matter of this Agreement. No amendment to the Agreement Documents shall be made except on the written agreement of the parties, which shall not be construed to release either party from any obligation of the Agreement Documents except as specifically provided for in such amendment.

8. Required Insurance.

Contractor shall not start work under this Agreement until Contractor has obtained, at Contractor's expense, all of the insurance specified in, and required by, the Agreement Documents. Contractor shall procure and keep in full force and effect the types and amounts of insurance specified in SHERMAN's Insurance Requirements, attached hereto as Exhibit B and incorporated herein for all purposes, for and during all aspects and phases of Contractor's work throughout the term of this Agreement at no expense to SHERMAN. Contractor also shall comply with all other requirements set forth in Exhibit B.

9. No Prohibited Interest; Vendor Disclosure.

Contractor acknowledges and agrees that it is aware of, and will abide by, the no prohibited interest requirement of the SHERMAN City Charter. Contractor shall execute and deliver to SHERMAN the Affidavit of No Prohibited Interest, attached hereto as Exhibit C and incorporated herein for all purposes, no later than the Effective Date of this Agreement (hereinafter defined). Contractor acknowledges and agrees that the existence of a prohibited interest during the term of this Agreement will render this Agreement voidable. Contractor further acknowledges and agrees that it also is aware of, and will abide by, the vendor disclosure requirements set forth in Chapter 176 of the Texas Local Government Code, as amended. In this connection, Contractor shall execute and deliver to SHERMAN the Conflict of Interest Questionnaire, Form CIQ, attached hereto as Exhibit D and incorporated herein for all purposes, no later than the Effective Date of this Agreement.

10. Indemnity.

CONTRACTOR HEREBY RELEASES AND SHALL DEFEND, INDEMNIFY AND HOLD HARMLESS SHERMAN AND ITS CITY COUNCIL MEMBERS, OFFICERS, AGENTS, REPRESENTATIVES AND EMPLOYEES (COLLECTIVELY REFERRED TO AS "SHERMAN" FOR PURPOSES OF THIS SECTION) FROM AND AGAINST ALL DAMAGES, INJURIES (WHETHER IN CONTRACT OR IN TORT, INCLUDING PERSONAL INJURY AND DEATH), CLAIMS, PROPERTY DAMAGES (INCLUDING LOSS OF USE), LOSSES, DEMANDS, SUITS, ACTIONS, JUDGMENTS, LIENS,

COSTS AND EXPENSES, INCLUDING REASONABLE ATTORNEY'S FEES AND EXPENSES (INCLUDING ATTORNEY'S FEES AND EXPENSES INCURRED IN ENFORCING THIS SECTION), THAT IN WHOLE OR IN PART ARISE OUT OF OR ARE CONNECTED WITH GOODS AND/OR SERVICES PROVIDED BY CONTRACTOR, ITS OFFICERS, AGENTS, REPRESENTATIVES, EMPLOYEES, SUBCONTRACTORS, LICENSEES, INVITEES OR ANY OTHER THIRD PARTIES FOR WHOM CONTRACTOR IS LEGALLY RESPONSIBLE (COLLECTIVELY REFERRED TO AS "CONTRACTOR" FOR PURPOSES OF THIS SECTION) PURSUANT TO THIS AGREEMENT AND/OR THE NEGLIGENT, GROSSLY NEGLIGENT AND/OR INTENTIONAL WRONGFUL ACT AND/OR OMISSION OF CONTRACTOR IN ITS/THEIR PERFORMANCE OF THIS AGREEMENT, REGARDLESS OF THE JOINT OR CONCURRENT NEGLIGENCE OF SHERMAN (COLLECTIVELY, "CLAIMS"). THIS INDEMNIFICATION PROVISION AND THE USE OF THE TERM "CLAIMS" IS ALSO SPECIFICALLY INTENDED TO APPLY TO, BUT IS NOT LIMITED TO, ANY AND ALL CLAIMS, WHETHER CIVIL OR CRIMINAL, BROUGHT AGAINST SHERMAN BY ANY GOVERNMENT AUTHORITY OR AGENCY RELATED TO ANY PERSON PROVIDING SERVICES UNDER THIS AGREEMENT THAT ARE BASED ON ANY FEDERAL IMMIGRATION LAW AND ANY AND ALL CLAIMS, DEMANDS, DAMAGES, ACTIONS AND CAUSES OF ACTION OF EVERY KIND AND NATURE, KNOWN AND UNKNOWN, EXISTING OR CLAIMED TO EXIST, RELATING TO OR ARISING OUT OF ANY EMPLOYMENT RELATIONSHIP BETWEEN CONTRACTOR AND ITS EMPLOYEES OR SUBCONTRACTORS AS A RESULT OF THAT SUBCONTRACTOR'S OR EMPLOYEE'S EMPLOYMENT AND/OR SEPARATION FROM EMPLOYMENT WITH CONTRACTOR, INCLUDING BUT NOT LIMITED TO ANY DISCRIMINATION CLAIM BASED ON SEX, SEXUAL ORIENTATION OR PREFERENCE, RACE, RELIGION, COLOR, NATIONAL ORIGIN, AGE OR DISABILITY UNDER FEDERAL, STATE OR LOCAL LAW, RULE OR REGULATION, AND/OR ANY CLAIM FOR WRONGFUL TERMINATION, BACK PAY, FUTURE WAGE LOSS, OVERTIME PAY, EMPLOYEE BENEFITS, INJURY SUBJECT TO RELIEF UNDER THE WORKERS' COMPENSATION ACT OR WOULD BE SUBJECT TO RELIEF UNDER ANY POLICY FOR WORKERS COMPENSATION INSURANCE, AND ANY OTHER CLAIM, WHETHER IN TORT, CONTRACT OR OTHERWISE.

IN ITS SOLE DISCRETION, SHERMAN SHALL HAVE THE RIGHT TO APPROVE OR SELECT DEFENSE COUNSEL TO BE RETAINED BY CONTRACTOR IN FULFILLING ITS OBLIGATION HEREUNDER TO DEFEND AND INDEMNIFY SHERMAN, UNLESS SUCH RIGHT IS EXPRESSLY WAIVED BY SHERMAN IN WRITING. SHERMAN RESERVES THE RIGHT TO PROVIDE A PORTION OR ALL OF ITS OWN DEFENSE; HOWEVER, SHERMAN IS UNDER NO OBLIGATION TO DO SO. ANY SUCH ACTION BY SHERMAN IS NOT TO BE CONSTRUED AS A WAIVER OF CONTRACTOR'S OBLIGATION TO DEFEND SHERMAN OR AS A WAIVER OF CONTRACTOR'S OBLIGATION TO INDEMNIFY SHERMAN PURSUANT TO THIS AGREEMENT. CONTRACTOR SHALL RETAIN SHERMAN-APPROVED DEFENSE COUNSEL WITHIN SEVEN (7) BUSINESS DAYS OF SHERMAN'S WRITTEN NOTICE THAT SHERMAN IS INVOKING ITS RIGHT TO DEFENSE OR INDEMNIFICATION UNDER THIS AGREEMENT. IF CONTRACTOR FAILS TO RETAIN COUNSEL WITHIN SUCH TIME PERIOD, SHERMAN SHALL HAVE THE RIGHT TO RETAIN DEFENSE COUNSEL ON ITS OWN BEHALF, AND CONTRACTOR SHALL BE LIABLE FOR ALL COSTS INCURRED BY SHERMAN.

THE RIGHTS AND OBLIGATIONS CREATED BY THIS SECTION SHALL SURVIVE TERMINATION OF THIS AGREEMENT.

11. Liability.
To the fullest extent permitted by law, Contractor shall be fully and solely responsible and liable for its own acts and omissions, including those of its officers, agents, representatives, employees, subcontractors, licensees, invitees and all other parties performing services for or on behalf of Contractor under this Agreement, and for any and all damage to Contractor's equipment and other property. SHERMAN assumes no such responsibility or liability. SHERMAN shall have no such responsibility or liability to either Contractor or its officers, agents, representatives, employees, subcontractors, licensees, invitees or other persons.

12. Compliance with Laws; Standard of Care.
Contractor shall comply with all federal, state and local laws, statutes, ordinances, regulations and policies, as they exist, may be amended or in the future arising, applicable to Contractor and its work. Contractor shall ensure that its officers, agents, representatives, employees, subcontractors, licensees, invitees and other parties performing services for or on behalf of Contractor under this Agreement comply with all applicable laws, statutes, ordinances, regulations and policies. If Contractor observes or is notified that the work under this Agreement is at variance with applicable laws, statutes, ordinances, regulations and policies, Contractor shall immediately notify SHERMAN in writing. Contractor shall perform the Services in accordance with the prevailing standard of care by exercising the skill and care ordinarily utilized by professionals performing the same or similar services under the same or similar circumstances in the State of Texas.

13. Termination.
SHERMAN is entitled to terminate this Agreement at any time for any reason or for no reason by giving Contractor at least thirty (30) days' prior written notice of the termination date.

SHERMAN is entitled to terminate this Agreement immediately on breach of any term or provision of the Agreement Documents by Contractor. If at any time during the term of this Agreement, Contractor shall fail to commence the work in accordance with the provisions of the Agreement Documents or fail to diligently perform the Services in an efficient, timely and careful manner and in strict accordance with the provisions of the Agreement Documents, then SHERMAN shall have the right to terminate this Agreement and complete the work in any manner it deems desirable, including engaging the services of other parties, if Contractor does not cure any such default after five (5) days written notice thereof. Any such act by SHERMAN shall not be deemed a waiver of any other right or remedy of SHERMAN.

If after exercising any remedy provided herein, the cost to SHERMAN of the performance of the balance of the work on the Project is in excess of that part of the Contractor's Fee which has not yet been paid to Contractor hereunder, Contractor shall be liable for and

shall reimburse SHERMAN for such excess, without waiver of any other right or remedy of SHERMAN.

The rights and remedies provided by this Agreement are cumulative, and the use of any one right or remedy by either party shall not preclude or waive its rights to use any or all other remedies. These rights and remedies are given in addition to any other rights the parties may have by law, statute, ordinance, or otherwise.

14. Authority to Execute.
Each party represents and warrants to the other that it has the full power and authority to enter into and fulfill the obligations of this Agreement. The respective signatories to this Agreement, by affixing their signatures hereto, warrant and represent that they have the authority to bind their respective parties as duly authorized representatives thereof.

15. Assignment.
Contractor agrees that neither this Agreement nor the work to be performed hereunder will be assigned or sublet without the prior written consent of SHERMAN. Contractor further agrees that the assignment or subletting of any portion or feature of the work or materials required in the performance of this Agreement shall not relieve Contractor of its full obligations to SHERMAN as provided by this Agreement. All such approved work performed by assignment or subletting shall be billed through Contractor, and there shall be no third party billing.

16. No Waiver of Immunity.
The parties acknowledge and agree that, in executing and performing this Agreement, SHERMAN has not waived, nor shall be deemed to have waived, any defense or immunity, including governmental, sovereign and official immunity, that would otherwise be available to it against claims arising in the exercise of governmental powers and functions. By entering into this Agreement, the parties do not create any obligations, express or implied, other than those set forth herein.

17. Savings/Severability.
In the event that a term, condition or provision of this Agreement is determined to be invalid, illegal, void, unenforceable or unlawful by a court of competent jurisdiction, then that term, condition or provision shall be deleted and the remainder of the Agreement shall remain in full force and effect as if such invalid, illegal, void, unenforceable or unlawful provision had never been included in this Agreement.

18. Consideration.
This Agreement is executed by the parties without coercion or duress and for substantial consideration, the sufficiency of which is forever confessed.

19. Attorneys' Fees.
If either party files any action or brings any proceeding against the other arising from this Agreement, then as between SHERMAN and Contractor, the prevailing party shall be

entitled to recover as an element of its costs of suit, and not as damages, reasonable and necessary attorneys' fees and litigation expenses both at trial and on appeal, subject to the limitations set forth in TEX. LOC. GOV'T CODE § 271.153, as it exists or may be amended, if applicable.

20. Governing Law; Venue.
The laws of the State of Texas shall govern the interpretation, validity, performance and enforcement of this Agreement, without regard to conflict of law principles. This Agreement is performable in Collin County, Texas, and the exclusive venue for any action arising out of this Agreement shall be a court of appropriate jurisdiction in Collin County, Texas.

21. Binding Effect.
This Agreement shall be binding on and inure to the benefit of the parties and their respective heirs, executors, administrators, legal representatives, successors and assigns when permitted by this Agreement.

22. No Waiver.
Waiver by either party of any breach of this Agreement, or the failure of either party to enforce any of the provisions of this Agreement, at any time, shall not in any way affect, limit, or waive such party's right thereafter to enforce and compel strict compliance.

23. Headings.
The headings of the various sections of this Agreement are included solely for convenience of reference and are not to be full or accurate descriptions of the content thereof.

24. Indemnity.
The parties agree that the indemnity provision set forth in Section 10 herein is conspicuous and the parties have read and understood the same.

25. Notice.
Any notice provided or permitted to be given under this Agreement must be in writing and may be served by depositing the same in the United States Mail, addressed to the party to be notified, postage pre-paid and registered or certified with return receipt requested; by electronic mail, with documentation evidencing the addressee's receipt thereof; or by delivering the same in person to such party a via hand-delivery service, or to any courier service that provides a return receipt showing the date of actual delivery of the same to the addressee thereof. Notice given in accordance herewith shall be effective on receipt at the address of the addressee. For purposes of notification, the addresses of the parties shall be as follows:

If to Contractor, to: Nema 3 Electric, Inc.
4481 Old Hwy 67 N
Midlothian, TX 76065

Telephone: 972 723 1180
Email: rcooper@nemaelectric.com

If to SHERMAN, to: City of SHERMAN
Attn: Robby Hefton, City Manager
220 W. Mulberry Street
Sherman, Texas 75090
Telephone: (903) 892-7201
Facsimile: (903) 892-7355
Email: robbyh@cityofsherman.com

With a copy to:
Abernathy, Roeder, Boyd & Hullett, P.C.
Attn.: Ryan D. Pittman
1700 Redbud Blvd., Suite 300
McKinney, Texas 75069
Telephone: (214) 544-4000
Facsimile: (214) 544-4054
Email: rpittman@abernathy-law.com

26. Representations.
Each party states that they have carefully read this Agreement, know the contents hereof, have consulted with an attorney of their choice regarding the meaning and effect hereof and is signing the same solely of their own judgment.

27. Independent Contractor.
Contractor covenants and agrees that Contractor is an independent contractor and not an officer, agent, servant or employee of SHERMAN; that Contractor shall have exclusive control of and exclusive right to control the details of the work performed hereunder and all persons performing the same; that the doctrine of respondent superior shall not apply as between SHERMAN and Contractor, its officers, agents, employees, contractors, subcontractors and consultants; and that nothing herein shall be construed as creating a partnership or joint enterprise between SHERMAN and Contractor.

28. Incorporation of Recitals.
The representations, covenants and recitations set forth in the foregoing recitals of this Agreement are true and correct and are hereby incorporated into the body of this Agreement and adopted as findings of SHERMAN and the authorized representative of Contractor.

29. Reference to Contractor.
When referring to "Contractor" herein, this Agreement shall refer to and be binding upon Contractor, and its officers, directors, partners, employees, representatives, contractors, subcontractors, licensees, invitees, agents, successors, assignees (as authorized herein),

vendors, grantees, trustees, legal representatives and/or any other third parties for whom Contractor is legally responsible.

30. Reference to SHERMAN.
When referring to "SHERMAN" herein, this Agreement shall refer to and be binding upon SHERMAN, its Council Members, officers, agents, representatives, employees and/or any other authorized third parties for whom SHERMAN is legally responsible.

31. Certifications Required by Texas Law.
In accordance with Chapter 2270 of the Texas Government Code (to the extent applicable), Contractor hereby certifies that Contractor does not boycott Israel and will not boycott Israel during the term of any contract with City, including during the term of this Agreement. In accordance with Chapter 809 of the Texas Government Code (to the extent applicable), Contractor hereby certifies that Contractor does not boycott energy companies and will not boycott energy companies during the term of any contract with City, including during the term of this Agreement. In accordance with Chapter 2274 of the Texas Government Code (to the extent applicable), Contractor hereby certifies that Contractor does not have a practice, policy, guidance or directive that discriminates against a firearm entity or firearm trade association and will not discriminate against a firearm entity or firearm trade association during the term of any contract with City, including during the term of this Agreement. The foregoing terms in this Section have the meanings ascribed to them in the referenced statutes if defined therein.

32. Debarment/Suspension.
SHERMAN is prohibited from making any award or permitting any award at any tier to any party which is debarred or suspended or otherwise excluded from or ineligible for participation in federal assistance programs under Executive Order 12549, Debarment and Suspension. SHERMAN, Contractor and Contractor's subcontractors shall comply with federal and state regulations regarding debarment and suspension. Contractor shall include a statement of compliance with federal and state debarment and suspension regulations in all third-party agreements for work on the Project.

33. Restrictions on Lobbying.
SHERMAN and Contractor are prohibited from using funds awarded under the Agreement for lobbying purposes. Contractor shall include a statement of compliance with this provision in applicable procurement solicitations and third-party agreements for work on the Project.

34. Miscellaneous Drafting Provisions.
This Agreement shall be deemed drafted equally by all parties hereto. The language of all parts of this Agreement shall be construed as a whole according to its fair meaning, and any presumption or principle that the language herein is to be construed against any party shall not apply. Headings in this Agreement are for the convenience of the parties and are not intended to be used in construing this document.

35. Multiple Counterparts.
This Agreement may be executed in a number of identical counterparts, each of which shall be deemed an original for all purposes. An electronic mail and/or facsimile signature will also be deemed to constitute an original if properly executed and delivered to the other party.

[*Signature page follows.*]

IN WITNESS WHEREOF, the parties have executed this Agreement and caused this Agreement to be effective when all the parties have signed it. The date this Agreement is signed by the last party to sign it (as indicated by the date associated with that party's signature below) will be deemed the effective date of this Agreement ("Effective Date").

CITY OF SHERMAN, TEXAS,
a home-rule municipality

By: _____
Robby Hefton, City Manager

Date: _____

ATTEST:

_____
Linda Ashby, City Clerk

APPROVED AS TO FORM:

_____
Abernathy, Roeder, Boyd & Hullett, PC
Ryan D. Pittman, City Attorneys

NEMA 3 Electric, Inc.
a Texas Corporation

By: Ricky Cooper
Printed Name: Ricky Cooper
Title: President
Date: April 4, 2024

STATE OF TEXAS §
§
COUNTY OF Ellis §

BEFORE ME, the undersigned authority, on this day personally appeared Ricky Cooper known to me to be one of the persons whose names are subscribed to the foregoing instrument; that he acknowledged to me he is the President and duly authorized representative for NEMA 3 Electric, Inc. and that he executed said instrument for the purposes and consideration therein expressed.

GIVEN UNDER MY HAND AND SEAL OF OFFICE this 4 day of April, 2024.

Jennifer leigh Pickler
Notary Public in and for the State of Texas
My Commission Expires: August 4, 2027

JENNIFER LEIGH PICKLER
Notary Public, State of Texas
Comm. Expires 08-04-2027
Notary ID 128695018

NEMA 3 Electric, Inc.

4181 Old Hwy 67, Midlothian, TX 76065 • 972-723-1180 • Fax 972-723-1181 Contractors

March 25, 2024 Proposal

City of Sherman
Attn: Theresa

RE: **Brinkley Park Pump Track**
Sherman, Texas

Quote $122,760.00 to install 4 Musco Poles and 12 Musco LED fixtures at Pump Track includes the following:

- Unload Musco fixtures, poles and components at site
- Assemble Musco fixtures, poles and driver enclosures
- Install wiring harness from driver enclosure to light fixtures
- Drill holes per Musco Structuarl Design
- Install Precast bases, concrete backfill
- Stand poles and attach to bases
- Install conduit and conductors from power company transformer pole to new enclosure
- Install enclosure, enclosure pad, meter base, low voltage panel
- Install conduit from new enclosure location to new pole locations
- Install new control link in enclosure
- Install conductors from contactors to poles
- Stub outs for future trail lighting
- Clean-up paper wrappings
- Check light levels; make aiming adjustments if necessary

Adder 13,833.00 to add another circuit, 6 lights and 2 driver boxes.

Terms: Net 30 – (no retainage withheld)

EXCLUDED FROM THE QUOTE:

- Installation of other than Musco poles and fixtures
- Additional crane inspections
- Engineering
- Withholding of retainage
- Haul-off of spoils
- Additional electrical work
- Storage container for glass product
- Traffic control
- Temporary fencing
- Additionally insured
- Allowances, bonding, permit fees, and sales tax

Upon payment we will transfer manufacturers' warranties to the Owner. EXCEPT FOR TRANSFERABLE

MANUFACTURER'S WARRANTIES WE ARE NOT RESPONSIBLE FOR INJURIES OR LOSSES DUE TO DESIGN, MANUFACTURING OR OTHER DEFECTS IN THE MATERIALS DESIGNATED OR SPECIFIED BY CONTRACTOR, OWNER OR THEIR AGENTS. All work to be completed in a workmanlike manner according to standard practices. Any alteration or deviation from above specifications involving extra costs will be executed only upon written orders, and will become an extra charge over and above the estimate. All agreements are contingent upon strikes, accidents or delays beyond our control. Owner is to carry fire, tornado and other necessary insurance. Our workers are fully covered by Workmen's Compensation Insurance.
Note: We may withdraw this proposal if not accepted within seven days.

TECL #18687 - Regulated by The Department of Licensing and Regulation – P.O. Box 12157, Austin, TX 78711; 1-800-803-8202, 512-463-6599; Website: www.license.tx.us/complaints

NEMA 3 Electric, Inc.

4181 Old Hwy 67, Midlothian, TX 76065 • 972-723-1180 • Fax 972-723-1181 Contractors

Acceptance of Proposal – The above prices, specifications and conditions are satisfactory and are hereby accepted, you are authorized to do the work as specified, payment will be made as outlined above.

Date of Acceptance: _____ Total Amount Accepted: _____

_____ _____

Signature Printed Name & Title

TECL #18687 - Regulated by The Department of Licensing and Regulation – P.O. Box 12157, Austin, TX 78711; 1-800-803-8202, 512-463-6599; Website: www.license.tx.us/complaints

Exhibit B
City's Insurance Requirements

I. GENERAL INSURANCE REQUIREMENTS –

A. All policies shall name the City of Sherman, its officers, agents, representatives and employees as additional insureds as to all applicable coverages with the exception of workers compensation insurance.

B. Such policies shall require the provision of written notice to City at least thirty (30) days prior to cancellation, non-renewal or material modification of any policies, evidenced by return receipt or United States Certified Mail.

C. Such policies shall provide for a waiver of subrogation against City for injuries, including death, property damage or any other loss to the extent the same is covered by the proceeds of the insurance.

II. INSURANCE COMPANY QUALIFICATION – All insurance companies providing the required insurance shall be authorized to transact business in the State of Texas, and shall have a minimum rating of "A" by A.M. Best's Key Rating Guide, or other equivalent rating service(s).

III. CERTIFICATE OF INSURANCE – A Certificate of Insurance and all applicable endorsement(s) evidencing the required insurance shall be submitted prior to commencing work under this Agreement. If the Agreement is renewed or extended by City, a Certificate of Insurance and all applicable endorsement(s) shall also be provided to City prior to the date the Agreement is renewed or extended.

IV. INSURANCE CHECKLIST – "X" means that the following coverage is required for this Agreement.

Coverage Required		Limits
X	1. Worker's Compensation & Employer's Liability	▪ Statutory Limits of the State of Texas
X	2. General Liability	▪ Minimum $1,000,000.00 each occurrence; ▪ Minimum $2,000,000.00 in the aggregate.
___	3. XCU Coverage	▪ Minimum $1,000,000.00 each occurrence; ▪ Minimum $2,000,000.00 in the aggregate.
___	4. Professional Liability	▪ Minimum $1,000,000.00 each claim; ▪ Minimum $2,000,000.00 in the aggregate.
___	5. Umbrella Coverage or Excess Liability Coverage	▪ An amount of $ 2,000,000.00.
X	6. City and its officers, agents, representatives and employees named as additional insured on General Liability Policy, as provided above. This coverage is primary to all other coverage City may possess.	
X	7. General Liability Insurance provides for a Waiver of Subrogation against City for injuries, including death, property damage, or any other loss to the extent that same is covered by the proceeds of the insurance. All insurance policies that are required to name City as an additional insured must be endorsed to read as primary and non-contributory coverage regardless of the application of other insurance.	

_X_ 8. Thirty (30) days' notice of cancellation, non-renewal, or material change required. The words "endeavor to" and "but failure" (to end of sentence) are to be eliminated from the Notice of Cancellation provision on standard ACORD certificates.

_X_ 9. Insurance company has a minimum rating of "A" by A.M. Best's Key Rating Guide, or other equivalent rating service(s).

_X_ 10. The Certificate of Insurance must state the project title.

___ 11. Other Insurance Requirements (State Below):

Exhibit C

Affidavit of No Prohibited Interest

THE STATE OF _____ §

THE COUNTY OF _____ §

I, _____, an authorized agent of Contractor, make this affidavit and hereby under oath state the following:

I, and/or a person or persons related to me, have the following interest in a business entity that would be affected by the work or decision under this Agreement (Check all that apply):

_____ Ownership of ten percent (10%) or more of the voting shares of the business entity.

_____ Ownership of Twenty-Five Thousand and 00/100 Dollars ($25,000) or more of the fair market value of the business entity.

_____ Funds received from the business entity exceed ten percent (10%) of my income for the previous year.

_____ Real property is involved, and I have an equitable or legal ownership with a fair market value of at least Twenty-Five Thousand and 00/100 Dollars ($25,000).

_____ A relative of mine has a substantial interest in the business entity or property that would be affected by my business decision of the public body which I am a member.

_____ Other:_____.

_____ None of the Above.

Upon filing this affidavit with the City of Sherman, Texas, I further affirm that no relative of mine, in the first degree by consanguinity or affinity, as defined in Chapter 573, TEX. GOV'T CODE, as amended, is a member of a public body which took action on the agreement.

Signed this ___ day of _____, 202_.

_____
Signature of Official/Title

BEFORE ME, the undersigned authority, this day personally appeared _____, and on oath stated that the facts hereinabove stated are true to the best of his/her knowledge or belief.

Sworn to and subscribed before me on this _____ day of _____, 202_.

_____
Notary Public in and for the State of _____
My commission expires: _____

Exhibit C

Affidavit of No Prohibited Interest

THE STATE OF Texas §

THE COUNTY OF Ellis §

I, Ricky Cooper, an authorized agent of Contractor, make this affidavit and hereby under oath state the following:

I, and/or a person or persons related to me, have the following interest in a business entity that would be affected by the work or decision under this Agreement (Check all that apply):

_____ Ownership of ten percent (10%) or more of the voting shares of the business entity.

_____ Ownership of Twenty-Five Thousand and 00/100 Dollars ($25,000) or more of the fair market value of the business entity.

_____ Funds received from the business entity exceed ten percent (10%) of my income for the previous year.

_____ Real property is involved, and I have an equitable or legal ownership with a fair market value of at least Twenty-Five Thousand and 00/100 Dollars ($25,000).

_____ A relative of mine has a substantial interest in the business entity or property that would be affected by my business decision of the public body which I am a member.

_____ Other:_____.

X None of the Above.

Upon filing this affidavit with the City of Sherman, Texas, I further affirm that no relative of mine, in the first degree by consanguinity or affinity, as defined in Chapter 573, TEX. GOV'T CODE, as amended, is a member of a public body which took action on the agreement.

Signed this 4 day of April, 2024.

Ricky Cooper
Signature of Official/Title

BEFORE ME, the undersigned authority, this day personally appeared Ricky Cooper, and on oath stated that the facts hereinabove stated are true to the best of his/her knowledge or belief.

Sworn to and subscribed before me on this 4 day of April, 2024.

Jennifer Leigh Pickler
Notary Public in and for the State of Texas
My commission expires: August 4, 2027

JENNIFER LEIGH PICKLER
Notary Public, State of Texas
Comm. Expires 08-04-2027
Notary ID 128695018

EXHIBIT D

CONFLICT OF INTEREST QUESTIONNAIRE

FORM CIQ

For vendor doing business with local governmental entity

This questionnaire reflects changes made to the law by H.B. 23, 84th Leg., Regular Session.

This questionnaire is being filed in accordance with Chapter 176, Local Government Code, by a vendor who has a business relationship as defined by Section 176.001(1-a) with a local governmental entity and the vendor meets requirements under Section 176.006(a).

By law this questionnaire must be filed with the records administrator of the local governmental entity not later than the 7th business day after the date the vendor becomes aware of facts that require the statement to be filed. *See* Section 176.006(a-1), Local Government Code.

A vendor commits an offense if the vendor knowingly violates Section 176.006, Local Government Code. An offense under this section is a misdemeanor.

OFFICE USE ONLY

Date Received

1 **Name of vendor who has a business relationship with local governmental entity.**

Nema 3 Electric, Inc.

2 ☐ **Check this box if you are filing an update to a previously filed questionnaire.** (The law requires that you file an updated completed questionnaire with the appropriate filing authority not later than the 7th business day after the date on which you became aware that the originally filed questionnaire was incomplete or inaccurate.)

3 **Name of local government officer about whom the information is being disclosed.**

N/A

Name of Officer

4 **Describe each employment or other business relationship with the local government officer, or a family member of the officer, as described by Section 176.003(a)(2)(A). Also describe any family relationship with the local government officer. Complete subparts A and B for each employment or business relationship described. Attach additional pages to this Form CIQ as necessary.**

A. Is the local government officer or a family member of the officer receiving or likely to receive taxable income, other than investment income, from the vendor?

☐ Yes ☐ No

B. Is the vendor receiving or likely to receive taxable income, other than investment income, from or at the direction of the local government officer or a family member of the officer AND the taxable income is not received from the local governmental entity?

☐ Yes ☐ No

5 **Describe each employment or business relationship that the vendor named in Section 1 maintains with a corporation or other business entity with respect to which the local government officer serves as an officer or director, or holds an ownership interest of one percent or more.**

6 ☐ Check this box if the vendor has given the local government officer or a family member of the officer one or more gifts as described in Section 176.003(a)(2)(B), excluding gifts described in Section 176.003(a-1).

7 Ricky Cooper

Signature of vendor doing business with the governmental entity

April 4, 2024

Date

CONFLICT OF INTEREST QUESTIONNAIRE
For vendor doing business with local governmental entity

A complete copy of Chapter 176 of the Local Government Code may be found at http://www.statutes.legis.state.tx.us/Docs/LG/htm/LG.176.htm. For easy reference, below are some of the sections cited on this form.

Local Government Code § 176.001(1-a): "Business relationship" means a connection between two or more parties based on commercial activity of one of the parties. The term does not include a connection based on:

(A) a transaction that is subject to rate or fee regulation by a federal, state, or local governmental entity or an agency of a federal, state, or local governmental entity;

(B) a transaction conducted at a price and subject to terms available to the public; or

(C) a purchase or lease of goods or services from a person that is chartered by a state or federal agency and that is subject to regular examination by, and reporting to, that agency.

Local Government Code § 176.003(a)(2)(A) and (B):

(a) A local government officer shall file a conflicts disclosure statement with respect to a vendor if:

***

(2) the vendor:

(A) has an employment or other business relationship with the local government officer or a family member of the officer that results in the officer or family member receiving taxable income, other than investment income, that exceeds $2,500 during the 12-month period preceding the date that the officer becomes aware that

(i) a contract between the local governmental entity and vendor has been executed; or

(ii) the local governmental entity is considering entering into a contract with the vendor;

(B) has given to the local government officer or a family member of the officer one or more gifts that have an aggregate value of more than $100 in the 12-month period preceding the date the officer becomes aware that:

(i) a contract between the local governmental entity and vendor has been executed; or

(ii) the local governmental entity is considering entering into a contract with the vendor.

Local Government Code § 176.006(a) and (a-1)

(a) A vendor shall file a completed conflict of interest questionnaire if the vendor has a business relationship with a local governmental entity and:

(1) has an employment or other business relationship with a local government officer of that local governmental entity, or a family member of the officer, described by Section 176.003(a)(2)(A);

(2) has given a local government officer of that local governmental entity, or a family member of the officer, one or more gifts with the aggregate value specified by Section 176.003(a)(2)(B), excluding any gift described by Section 176.003(a-1); or

(3) has a family relationship with a local government officer of that local governmental entity.

(a-1) The completed conflict of interest questionnaire must be filed with the appropriate records administrator not later than the seventh business day after the later of:

(1) the date that the vendor:

(A) begins discussions or negotiations to enter into a contract with the local governmental entity; or

(B) submits to the local governmental entity an application, response to a request for proposals or bids, correspondence, or another writing related to a potential contract with the local governmental entity; or

(2) the date the vendor becomes aware:

(A) of an employment or other business relationship with a local government officer, or a family member of the officer, described by Subsection (a);

(B) that the vendor has given one or more gifts described by Subsection (a); or

(C) of a family relationship with a local government officer.

SHERMAN CITY COUNCIL
Agenda Communication Form

City Council Regular Meeting Agenda Item No. H.11.

Meeting Date: 4/15/2024

Prepared By: Nate Strauch, Community and Support Services Manage

Approved By: Robby Hefton, City Manager

Caption:
**** RESOLUTION NO. 7291***
Authorizing Execution of a Third Payment of Funds Under the City of Sherman's Downtown Building Improvement Grant Program for Renovations to 213 Travis Street to David Downtain, D/B/A RP Sherman Properties II, LLC

Issue:
Authorizing Execution of a Third Payment of Funds Under the City of Sherman's Downtown Building Improvement Grant Program for Renovations to 213 Travis Street to David Downtain, D/B/A RP Sherman Properties II, LLC

Background:
The Sherman City Council previously approved a grant for improvements 213 N Travis, aka "The Modern Building." That project has exceeded the $50,000 threshold for a second grant under the DBIG program. State purchasing laws require a second resolution to authorize the disbursement.

1) 10/17/2022 Resolution 6967 - $25,000
2) 03/06/2023 Resolution 7039 - $50,000

Origination:
Sherman Finance Department

Financial Consideration:
The project qualifies for a FY2024 grant in the amount of $50,000.

Staff Recommendation:
Staff recommends approval.

Alternatives:
As directed by Council

Attachments:
1. Resolution No. 7291
2. Resolution No. 6967
3. Resolution No. 7039
4. Resolution No. 7025 - DBI Grant

RESOLUTION NO. 7291

A RESOLUTION OF THE CITY COUNCIL OF THE CITY OF SHERMAN, TEXAS, AUTHORIZING EXECUTION OF A THIRD PAYMENT OF FUNDS UNDER THE CITY OF SHERMAN'S DOWNTOWN BUILDING IMPROVEMENT GRANT PROGRAM FOR RENOVATIONS TO 213 TRAVIS STREET TO DAVID DOWNTAIN, D/B/A RP SHERMAN PROPERTIES II, LLC; FINDING AND DETERMINING THAT THE MEETING AT WHICH THIS RESOLUTION IS PASSED WAS NOTICED AND IS OPEN TO THE PUBLIC AS REQUIRED BY LAW.

BE IT RESOLVED BY THE CITY COUNCIL OF THE CITY OF SHERMAN, TEXAS:

SECTION 1. That the City Manager be and is hereby authorized and directed, subject to all contract documents being properly completed and approved as to form and content by the City Attorney, to execute an payment to David Downtain, d/b/a RP Sherman Properties II, LLC for renovations to 213 Travis Street under the City of Sherman's Downtown Building Improvement Grant Program, in accordance with all contract documents attached hereto and made a part hereof for all purposes.

SECTION 2. That it is hereby officially found and determined that the meeting at which this resolution is passed is open to the public and that public notice of the time, place, and purpose of said meeting was given as required by law.

DULY PASSED AND APPROVED BY THE CITY COUNCIL OF THE CITY OF SHERMAN, TEXAS on this the 15th day of April 2024.

CITY OF SHERMAN, TEXAS

BY: _____
DAVID PLYLER, MAYOR

ATTEST:

BY: _____
LINDA ASHBY, CITY CLERK

APPROVED AS TO FORM AND CONTENT:
THE LAW FIRM OF ABERNATHY, ROEDER, BOYD & HULLETT, P.C

BY: _____
RYAN D. PITTMAN, CITY ATTORNEY

RESOLUTION NO. 6967

A RESOLUTION OF THE CITY COUNCIL OF THE CITY OF SHERMAN, TEXAS, AUTHORIZING EXECUTION OF AN AGREEMENT WITH DAVID DOWNTAIN, D/B/A RP SHERMAN PROPERTIES II, LLC UNDER THE CITY OF SHERMAN'S CENTRAL BUSINESS DISTRICT HISTORIC BUILDING RESTORATION AND IMPROVEMENT GRANT PROGRAM FOR IMPROVEMENTS TO 213 NORTH TRAVIS STREET; FINDING AND DETERMINING THAT THE MEETING AT WHICH THIS RESOLUTION IS PASSED WAS NOTICED AND IS OPEN TO THE PUBLIC AS REQUIRED BY LAW.

BE IT RESOLVED BY THE CITY COUNCIL OF THE CITY OF SHERMAN, TEXAS:

SECTION 1. That the City Manager be and is hereby authorized and directed, subject to all contract documents being properly completed and approved as to form and content by the City Attorney, to execute an agreement with David Downtain, d/b/a RP Sherman Properties II, LLC for improvements to 213 North Travis Street under the City of Sherman's Central Business District Historic Building Restoration and Improvement Grant Program, in accordance with all contract documents attached hereto and made a part hereof for all purposes.

SECTION 2. That it is hereby officially found and determined that the meeting at which this resolution is passed is open to the public and that public notice of the time, place, and purpose of said meeting was given as required by law.

DULY PASSED AND APPROVED BY THE CITY COUNCIL OF THE CITY OF SHERMAN, TEXAS on this the 17th day of October, 2022.

CITY OF SHERMAN, TEXAS

BY: _____
DAVID PLYLER, MAYOR

ATTEST:

BY: _____
LINDA ASHBY, CITY CLERK

APPROVED AS TO FORM AND CONTENT:
THE LAW FIRM OF ABERNATHY, ROEDER, BOYD & HULLETT, P.C

BY: _____
RYAN D. PITTMAN, CITY ATTORNEY

RESOLUTION NO. 7039

A RESOLUTION OF THE CITY COUNCIL OF THE CITY OF SHERMAN, TEXAS, AUTHORIZING EXECUTION OF AN AGREEMENT WITH DAVID DOWNTAIN, D/B/A RP SHERMAN PROPERTIES II, LLC UNDER THE CITY OF SHERMAN'S CENTRAL BUSINESS DISTRICT HISTORIC BUILDING RESTORATION AND IMPROVEMENT GRANT PROGRAM FOR IMPROVEMENTS TO 213 N TRAVIS STREET; FINDING AND DETERMINING THAT THE MEETING AT WHICH THIS RESOLUTION IS PASSED WAS NOTICED AND IS OPEN TO THE PUBLIC AS REQUIRED BY LAW.

BE IT RESOLVED BY THE CITY COUNCIL OF THE CITY OF SHERMAN, TEXAS:

SECTION 1. That the City Manager be and is hereby authorized and directed, subject to all contract documents being properly completed and approved as to form and content by the City Attorney, to execute an agreement with David Downtain, d/b/a RP Sherman Properties II, LLC for improvements to 213 N Travis Street under the City of Sherman's Central Business District Historic Building Restoration and Improvement Grant Program, in accordance with all contract documents attached hereto and made a part hereof for all purposes.

SECTION 2. That it is hereby officially found and determined that the meeting at which this resolution is passed is open to the public and that public notice of the time, place, and purpose of said meeting was given as required by law.

DULY PASSED AND APPROVED BY THE CITY COUNCIL OF THE CITY OF SHERMAN, TEXAS on this the 6th day of March 2023.

CITY OF SHERMAN, TEXAS

BY: _____
DAVID PLYLER, MAYOR

ATTEST:

BY: _____
LINDA ASHBY, CITY CLERK

APPROVED AS TO FORM AND CONTENT:
THE LAW FIRM OF ABERNATHY, ROEDER, BOYD & HULLETT, P.C

BY: _____
RYAN D. PITTMAN, CITY ATTORNEY

RESOLUTION NO. 7025

A RESOLUTION OF THE CITY COUNCIL OF THE CITY OF SHERMAN, TEXAS, DECLARING THE CITY OF SHERMAN'S INTENTION TO PARTICIPATE IN AN ECONOMIC DEVELOPMENT PROGRAM TO PROMOTE DEVELOPMENT/REDEVELOPMENT IN TAX INCREMENT REINVESTMENT ZONE NUMBER 2; ESTABLISHING GUIDELINES AND CRITERIA; FINDING AND DETERMINING THAT THE MEETING AT WHICH THIS RESOLUTION IS PASSED WAS NOTICED AND IS OPEN TO THE PUBLIC AS REQUIRED BY LAW.

BE IT RESOLVED BY THE CITY COUNCIL OF THE CITY OF SHERMAN, TEXAS:

SECTION 1. That the City of Sherman intends to participate in an economic development program to promote development/redevelopment in Tax Increment Reinvestment Zone Number 2 and to establish program guidelines.

SECTION 2. That it is hereby officially found and determined that the meeting at which this resolution is passed is open to the public and that public notice of the time, place, and purpose of said meeting was given as required by law.

DULY PASSED AND APPROVED BY THE CITY COUNCIL OF THE CITY OF SHERMAN, TEXAS on this the 6th day of February 2023.

CITY OF SHERMAN, TEXAS

BY: _____
DAVID PLYLER, MAYOR

ATTEST:

BY: Linda Ashby
LINDA ASHBY, CITY CLERK

APPROVED AS TO FORM:
THE LAW FIRM OF ABERNATHY, ROEDER, BOYD & HULLETT, P.C.

BY: _____
RYAN D. PITTMAN, CITY ATTORNEY

Sherman
CLASSIC TOWN. BROAD HORIZON.

Downtown Building Improvement Grant

Guidelines and Policies

Policy Statement

The Downtown Building Improvement Grant program is designed to stimulate improvements to existing, historic buildings in the downtown Tax Increment Reinvestment Zone of the City of Sherman, Texas. The goal of this program is to enhance the physical appearance and economic vitality of downtown Sherman, and to promote public/private investment to complement ongoing historical revitalization efforts.

Program Description

This program is designed to make positive, high-impact visual improvements to historically significant commercial and residential buildings by providing an overall enhanced image for downtown Sherman, thereby attracting visitors to shop, dine, and do business downtown.

The program provides a maximum grant of $50,000 per project, per year as a matching monetary incentive to the owners or tenants of historically significant commercial or residential properties in the downtown TIRZ.

In most cases, for every $4 the applicant invests in the renovation or improvement of the subject property, the City will reimburse $1 of qualified expenditures, up to the maximum grant authorized by the City Council, not to exceed $50,000 per project, per year.

For improvements required by any City of Sherman department – including but not limited to grease traps, sprinkler systems, and plumbing improvements – the City will reimburse $1 for every $2 spent by the applicant, up to $50,000 per project, per year.

Likewise, any portion of a project to restore a historic façade (e.g. removing "modernized" cladding to reveal original architecture), is eligible for the increased 2:1 match. The City Council retains authority to decide the final matching amount and funding ratio on any project.

Any City building permit for work covered under this grant will not be charged any fees for those permits. However, this provision is NOT retroactive and applies only to building permit fees incurred after approval.

Eligibility

Historic buildings within the downtown TIRZ that are of a commercial, residential, retail, service, or professional use are eligible to participate in the program. For the purposes of this grant, "historic" refers to any building built more than 50 years before the current year.

Assistance under this program will be considered subject to the availability of funding and subject to the approval of the City Council.

Minimum Guidelines

To be approved for a grant under this program, projects must make a substantial improvement to the building, at the discretion of City staff and City Council. Routine upgrades such as painting are considered maintenance, not an improvement.

Building improvements should maintain the character of the downtown area. Program funds shall be made available only to projects that enhance and are sensitive to the historical nature of the structure. The design drawings must be approved by the City in order to access funding for improvement.

Buildings improved with funds from this program must remain occupied for at least 4 of the 5 years following the completion of the project. Any applicant who fails to satisfy this requirement will not be eligible for additional grants under this program, and the City reserves the right to claw back funds paid to the applicant under this program. For the purposes of this grant, "Occupied" refers to ongoing commercial, residential, retail, service, or professional use, and does not include passive uses such as storage, as determined by the City in its sole discretion.

Retroactive applications will not be accepted. Only work that is currently underway or has yet to begin at the time of approval qualifies for reimbursement.

Grants are provided on a first-come, first-served basis. The City reserves the right to amend or modify these Guidelines and program eligibility and requirements at any time.

Additional requirements:

- Improvements to be undertaken shall conform to the City's then-current codes and any other then-current policies and regulations applying to the subject property.
- For properties with multiple storefronts, it is recommended that the façade treatment provide a cohesive theme while also allowing for some distinctive design elements to the various businesses, such as signage, exposing transom windows, lighting, flower boxes, murals, etc., to provide better street visibility and promote economic development downtown.

- Permits for any project under this program must be obtained no more than six (6) months after Council approval. The approval of an application under this program is considered null and void if this requirement is not met or if permits have expired without the work being completed. If those permits expire, the applicant must re-apply.

- Any project with a verified, third-party bid for work totaling more than $500,000 is eligible to be considered for a grant for each budget year during which work is ongoing, so long as the total amount granted in the previous year has been exhausted. Applicants will be eligible for a second grant covering only the remaining, unpaid work, not for work that has already been completed.

Eligible Improvements

Eligible improvements must be permanent in nature as determined by the City of Sherman in its sole discretion. All improvements must be consistent with the City of Sherman Master Plan, zoning ordinance, building regulations, and other applicable laws. Eligible costs include the cost of materials, equipment, and contracted labor to complete eligible improvements, including, but not limited to, the following:

- Commercial code compliance renovations
- Permanent commercial interior remodeling improvements
- Permanent commercial site (exterior) improvements
- Compliance with Americans with Disabilities Act (ADA) for commercial properties
- Work necessary to bring the structure up to life-safety code standards
- Installation, repair, and replacement of exterior doors and hardware
- Repair, replacement, or addition of exterior shutters and awnings/canopies
- Repair, replacement, or purchase of signs (when performed as part of an overall façade improvement)
- Repair and replacement or installation of interior and exterior stairs, porches, railings, and exit facilities
- Repair and rebuilding of interior and exterior walls, including cleaning, sealing, tuckpointing and painting
- Repair or replacement of frames, sills, glazing, replacement of glass and installation of new windows
- Installation of permanently affixed landscaping, such as stone or brick planters
- Installation, repair, or replacement of exterior lighting
- Mechanical, including rewiring, replumbing, insulation, mechanical systems/climate control

Ineligible Improvements include:

- Furnishings and equipment purchases
- Working capital
- Inventory financing
- Title reports and legal fees
- Extermination of insects, rodents, vermin, and other pests
- Improvements that do not comply with City of Sherman Master Plan, Zoning Ordinance, Building Regulations, and other applicable laws

Application Process

Program Application and Agreement forms are available on the City of Sherman website, www.cityofsherman.com. The application process is as follows:

After reviewing the program guidelines, the applicant will meet with City staff to discuss the work to be undertaken. If the proposed work is within the program guidelines, as determined by City staff in its sole discretion, a completed application is submitted to the City. Written bids, sketches, color samples, and material supplies should be included with the complete application, as well as proof of ownership or a lease agreement. The applicant is responsible for submitting plans and specifications to the City and obtaining all required planning and building permits, and any other applicable approvals.

The Sherman City Council will consider the recommendations made by the City staff and will make its decision in a public meeting.

Deviations from approved plans and specifications may disqualify the applicant from reimbursement under this grant program unless those changes are approved by City staff. False or incomplete information submitted by the applicant to the City also shall disqualify the applicant for reimbursement. Any applicant disqualified for these reasons or denied for a grant has the right to appeal to the City Manager, who will make a final determination. Any appeals must be in writing, state the grounds for the appeal, and submitted within 10 days of the date of disqualification or denial.

Funds will be reimbursed only after payment has been made by the applicant. Reimbursement claims for all eligible expenses must be submitted along with cancelled checks and matching invoices/receipts for eligible work. Any invoices paid more than eighteen months after City Council approval of a grant application is not eligible for reimbursement. The City reserves the right to require the return of funds provided, plus interest and collection costs, in the event the applicant fails to complete the work or otherwise fails to comply with any applicable program guidelines and requirements, ordinances or other laws.

Sherman
CLASSIC TOWN. BROAD HORIZON.

Downtown Tax Increment Reinvestment Zone

An online version of this map is available here:
https://experience.arcgis.com/experience/6000d76bee8f4c47a07f21e9a9ceae6a

Downtown Building Improvement Grant Application and Agreement

The information requested below will be used to process your application under the terms and conditions of the City of Sherman's Downtown Building Improvement Grant. All grant applications must include pictures of the current building, designs or renderings of the finished product, and historical pictures, if available.

I. Applicant Information

1. Applicant(s) name:_____

   Mailing address:_____

   City:_____ State:_____ Zip:_____

2. Applicant's daytime telephone number:_____

   E-mail address:_____

3. Status of applicant (please check one)
   - ____ Property owner with vacant facility
   - ____ Property owner with tenant business
   - ____ Property owner/operator of existing business on property
   - ____ Property tenant with property owner consent
   - ____ Property deed, lease, or other document evidencing applicant's status

5. Length of ownership/ lease: _____
   Date purchased/ leased: _____

II. Property Information

1. Address of property to be improved: _____

2. Legal description of subject property:

   _____

   _____

3. Grayson County Tax Assessor Parcel Number(s):

   _____

4. Year built: _____ Square footage: _____
   (Eligible buildings must be at least 50 years of age.)

6. What are the current types of businesses or other uses occupying the building?

   _____

   _____

   _____

7. Name and phone number of tenant(s), if applicable: _____

_____

(Attach additional names/numbers, if needed)

8. Use of building after construction: _____

_____

9. Number of parking spaces provided: _____ Proposed:_____ Total:_____

10. Current zoning:_____

11. Is a zoning amendment required? Yes___ No___

III. Project Description

1. Description of Proposed Improvements. Please provide a detailed description of your proposed improvements. Attach a copy of your architectural or design plans.

Description:_____

_____

_____

_____

_____

_____

_____

_____

_____

_____

_____

☐ Designs Attached	☐ "Before" Picture(s) Attached

2. How many jobs will be **retained** once the project is completed?

_____ Full-time positions _____ Part-time positions

3. How many **new positions** will result from this project?

_____ Full-time positions _____ Part-time positions

IV. Work Estimates

Please attach a minimum of two (2) independent contractor estimates for the proposed improvements. Please note that grant funding shall be based on the lowest bid. Eligible costs shall be the cost of materials, equipment, and contracted labor to complete eligible improvements.

1. Name/Company and Phone Number of Preferred Contractor:

_____

_____

Amount:_____

2. Name/Company and Phone Number of Second Contractor:

_____

_____

Amount: _____

3. Additional Estimates/Comments: (Please attach additional quotes, as required)

4. Total estimated costs of your improvements: _____

5. Estimated completion date for your improvements? _____

VI. Agreement of Applicant and Property Owner

I/We, _____, of the City of Sherman, County of Grayson, State of Texas, declare under penalty of perjury that the information contained in this application is true and correct and that the information contained in the documents that accompany this application is true, correct, and complete. I/We certify and warrant that the proposed work described in this Application meets the eligibility requirements of the City of Sherman Downtown Building Improvement Grant Program. In exchange for the City of Sherman's consideration of this application, I/We hereby agree to the following:

I/We hereby authorize City of Sherman employees and agents to perform inspections of my/our property if granted funds under the City of Sherman Downtown Building Improvement Grant Program, both before and during the work for which funds are granted under this Program and after completion of the work to ensure compliance with the terms and conditions of the Program and all other applicable ordinances and other laws.

I/We acknowledge that any work carried out prior to written confirmation of grant approval may not be eligible for reimbursement.

I/We acknowledge receiving, understanding, and accepting the terms and conditions of the City of Sherman Downtown Building Improvement Grant Program, and agree to fully comply with the same along with all other applicable ordinances and other laws, all of which are incorporated herein by reference, if granted funds under the Program. I agree that the City of Sherman is entitled to the immediate return or reimbursement of any and all funds paid to the Applicant or other persons under the Program, plus interest and collection costs, in the event the Applicant fails to complete the work for which the grant was approved or otherwise fails to comply with all applicable Program guidelines and requirements, ordinances and other laws. I/We Applicants further acknowledge and agree that, if funds provided by the City to the Applicant under the Program are determined at any time not to comply with applicable state laws relating to the authorized uses of such funds, all funds paid to the Applicant or other persons under the Program shall be immediately returned or reimbursed to the City.

Chapter 2264 Certification: Pursuant to Chapter 2264 of the Texas Local Government Code, I/We hereby certifies that the Applicant's business, or a branch, division, or department of the Applicant's business, does not and will not knowingly employ an undocumented worker. An undocumented worker means an individual who, at the time of employment, is not lawfully admitted for permanent residence to the United States or authorized under the law to be employed in that manner in the United States. If after receiving this grant from the City of Sherman, Applicant, or a branch, division, or department of Applicant's business, is convicted of a violation under 8 U.S.C. Section 1324a(f), Applicant shall repay the amount of the grant with interest, at the rate and according to the terms provided by this Agreement under Section 2264.053 of the Texas Local Government Code, not later than the 120th day after the date

the Applicant is notified of the violation. I/We agree that this document serves as an agreement under Chapter 380 of the Texas Local Government Code.

I/We agree to indemnify, release, defend and hold harmless the City of Sherman and its officers, employees and agents, from and against all claims, losses, liabilities, damages, suits, actions, or proceedings asserted or brought by any person, including Applicant and the property owner and their respective officers, employees, agents, contractors, and subcontractors, arising out of personal injury, death or property damage from any cause whatsoever in whole or in part arising out of this Agreement or the activities completed hereunder.

_____

Applicant or Authorized Agent of Applicant

_____

Property Owner (if different from Applicant)
or Authorized Agent of Property Owner

VII. Consent of the Owner to the Use and Disclosure of Information

I/We, _____, am the owner of the land that is the subject of this Application, and I/we authorize and consent to the use by or the disclosure to any person or public body, including the City of Sherman, of any personal or other information that is collected for the purposes of processing this application and administering the grant program. (*Note: Information provided in this application will become a public record, subject to disclosure under the Texas Public Information Act and/or Texas Open Meetings Act.)*

_____ _____

Date Signature of Owner(s)

SHERMAN CITY COUNCIL
Agenda Communication Form

City Council Regular Meeting Agenda Item No. H.12.

Meeting Date: 4/15/2024

Prepared By: Nate Strauch, Community and Support Services Manage

Approved By: Robby Hefton, City Manager

Caption:
**** RESOLUTION NO. 7292***
Authorizing Execution of a Third Payment of Funds Under the City of Sherman's Downtown Building Improvement grant Program for the Renovations to 219 W. Houston Street to David Downtain, D/B/A RP Sherman Properties II, LLC

Issue:
Authorizing Execution of a Third Payment of Funds Under the City of Sherman's Downtown Building Improvement grant Program for the Renovations to 219 W. Houston Street to David Downtain, D/B/A RP Sherman Properties II, LLC

Background:
The Sherman City Council previously approved a grant for improvements 219 W Houston, aka the "Kreager Building." That project has exceeded the $50,000 threshold for a second grant under the DBIG program. State purchasing laws require a second resolution to authorize the disbursement.

1) 12/9/2022 - $25,000
2) 8/7/2023 - $50,000 Resolution N. 7112

Origination:
Sherman Finance Department

Financial Consideration:
The project qualifies for a FY2024 disbursement of 50k under the DBIG program.

Staff Recommendation:
Staff recommends approval

Alternatives:
As directed by Council

Attachments:
1. Resolution No. 7292
2. Resolution 7112
3. Resolution 7025 - DBI Grant

RESOLUTION NO. 7292

A RESOLUTION OF THE CITY COUNCIL OF THE CITY OF SHERMAN, TEXAS, AUTHORIZING EXECUTION OF A THIRD PAYMENT OF FUNDS UNDER THE CITY OF SHERMAN'S DOWNTOWN BUILDING IMPROVEMENT GRANT PROGRAM FOR RENOVATIONS TO 219 W. HOUSTON STREET TO DAVID DOWNTAIN, D/B/A RP SHERMAN PROPERTIES II, LLC; FINDING AND DETERMINING THAT THE MEETING AT WHICH THIS RESOLUTION IS PASSED WAS NOTICED AND IS OPEN TO THE PUBLIC AS REQUIRED BY LAW.

BE IT RESOLVED BY THE CITY COUNCIL OF THE CITY OF SHERMAN, TEXAS:

SECTION 1. That the City Manager be and is hereby authorized and directed, subject to all contract documents being properly completed and approved as to form and content by the City Attorney, to execute an payment to David Downtain, d/b/a RP Sherman Properties II, LLC for renovations to 219 W. Houston Street under the City of Sherman's Downtown Building Improvement Grant Program, in accordance with all contract documents attached hereto and made a part hereof for all purposes.

SECTION 2. That it is hereby officially found and determined that the meeting at which this resolution is passed is open to the public and that public notice of the time, place, and purpose of said meeting was given as required by law.

DULY PASSED AND APPROVED BY THE CITY COUNCIL OF THE CITY OF SHERMAN, TEXAS on this the 15th day of April 2024.

CITY OF SHERMAN, TEXAS

BY: _____
DAVID PLYLER, MAYOR

ATTEST:

BY: _____
LINDA ASHBY, CITY CLERK

APPROVED AS TO FORM AND CONTENT:
THE LAW FIRM OF ABERNATHY, ROEDER, BOYD & HULLETT, P.C

BY: _____
RYAN D. PITTMAN, CITY ATTORNEY

RESOLUTION NO. 7112

A RESOLUTION OF THE CITY COUNCIL OF THE CITY OF SHERMAN, TEXAS, AUTHORIZING EXECUTION OF AN AGREEMENT WITH DAVID DOWNTAIN, D/B/A RP SHERMAN PROPERTIES II, LLC UNDER THE CITY OF SHERMAN'S DOWNTOWN BUILDING IMPROVEMENT GRANT PROGRAM FOR RENOVATIONS TO 219 W. HOUSTON STREET; FINDING AND DETERMINING THAT THE MEETING AT WHICH THIS RESOLUTION IS PASSED WAS NOTICED AND IS OPEN TO THE PUBLIC AS REQUIRED BY LAW.

BE IT RESOLVED BY THE CITY COUNCIL OF THE CITY OF SHERMAN, TEXAS:

SECTION 1. That the City Manager be and is hereby authorized and directed, subject to all contract documents being properly completed and approved as to form and content by the City Attorney, to execute an agreement with David Downtain, d/b/a RP Sherman Properties II, LLC for improvements to 219 W. Houston Street under the City of Sherman's Downtown Building Improvement Grant Program, in accordance with all contract documents attached hereto and made a part hereof for all purposes.

SECTION 2. That it is hereby officially found and determined that the meeting at which this resolution is passed is open to the public and that public notice of the time, place, and purpose of said meeting was given as required by law.

DULY PASSED AND APPROVED BY THE CITY COUNCIL OF THE CITY OF SHERMAN, TEXAS on this the 7th day of August 2023.

CITY OF SHERMAN, TEXAS

BY: _____
DAVID PLYLER, MAYOR

ATTEST:

BY: _____
LINDA ASHBY, CITY CLERK

APPROVED AS TO FORM AND CONTENT:
THE LAW FIRM OF ABERNATHY, ROEDER, BOYD & HULLETT, P.C

BY: _____
RYAN D. PITTMAN, CITY ATTORNEY

Downtown Building Improvement Grant Application and Agreement

The information requested below will be used to process your application under the terms and conditions of the City of Sherman's Downtown Building Improvement Grant. All grant applications must include pictures of the current building, designs or renderings of the finished product, and historical pictures, if available.

I. Applicant Information

1. Applicant(s) name: RP Sherman Properties II, LLC

   Mailing address: 1200 N East St

   City: Sherman State: Texas Zip: 75090

2. Applicant's daytime telephone number: 972-832-8011

   E-mail address: ddowntain@risenproperties.com

3. Status of applicant (please check one)
   - x Property owner with vacant facility
   - ____ Property owner with tenant business
   - ____ Property owner/operator of existing business on property
   - ____ Property tenant with property owner consent
   - ____ Property deed, lease, or other document evidencing applicant's status

5. Length of ownership/ lease: 2 Years
   Date purchased/ leased: August 3, 2021

II. Property Information

1. Address of property to be improved: 219 W Houston St

2. Legal description of subject property:
   OTP SHERMAN, BLOCK 1, LOT 1, 50X100 5000 SF 50X100 5000 SF and
   ALLEN S B ADDN, BLOCK W, LOT E 37, 37X140 5250 SF

3. Grayson County Tax Assessor Parcel Number(s):
   161829 AND 161738

4. Year built: early 1900's Square footage: 13, 680 sf
   (Eligible buildings must be at least 50 years of age.)

6. What are the current types of businesses or other uses occupying the building?
   None, this property has been vacant for 30+ years

7. Name and phone number of tenant(s), if applicable: N/A

(Attach additional names/numbers, if needed)

8. Use of building after construction: Multi-Tenant mixed use - retail, restaurant, office

9. Number of parking spaces provided: _____ Proposed: _____ Total: 10

10. Current zoning: Central Business District

11. Is a zoning amendment required? Yes___ No_x__

III. Project Description

1. Description of Proposed Improvements. Please provide a detailed description of your proposed improvements. Attach a copy of your architectural or design plans.

Description:

This is Phase II which includes the addition of an elevator to this property. These improvements will allow the 7,500 2nd floor to be utilized to it's full potential. The elevator is fully compliant with Texas regulations, Moderately sized for 3,000 lb. capacity operating at an efficient speed. Additional costs are required for fire suppression, alarm and monitoring - these costs are not included in the attached budget.

☒ **Designs Attached** ☐ **"Before" Picture(s) Attached**

2. How many jobs will be **retained** once the project is completed?

_____ Full-time positions _____ Part-time positions

3. How many **new positions** will result from this project?

10-14 Full-time positions _____ Part-time positions

IV. Work Estimates

Please attach a minimum of two (2) independent contractor estimates for the proposed improvements. Please note that grant funding shall be based on the lowest bid. Eligible costs shall be the cost of materials, equipment, and contracted labor to complete eligible improvements.

1. Name/Company and Phone Number of Preferred Contractor:
Joshua Downtain, d2Built.com 940-289-0202

Amount: 221,200

2. Name/Company and Phone Number of Second Contractor:
Joe Tully, PintrailRestoration.com 469-642-9910

Amount: 243,500

3. Additional Estimates/Comments: (Please attach additional quotes, as required)

4. Total estimated costs of your improvements: 221,200

5. Estimated completion date for your improvements? October 31, 2023

VI. Agreement of Applicant and Property Owner

I/We, RP Sherman Properties II, LLC, of the City of Sherman, County of Grayson, State of Texas, declare under penalty of perjury that the information contained in this application is true and correct and that the information contained in the documents that accompany this application is true, correct, and complete. I/We certify and warrant that the proposed work described in this Application meets the eligibility requirements of the City of Sherman Downtown Building Improvement Grant Program. In exchange for the City of Sherman's consideration of this application, I/We hereby agree to the following:

I/We hereby authorize City of Sherman employees and agents to perform inspections of my/our property if granted funds under the City of Sherman Downtown Building Improvement Grant Program, both before and during the work for which funds are granted under this Program and after completion of the work to ensure compliance with the terms and conditions of the Program and all other applicable ordinances and other laws.

I/We acknowledge that any work carried out prior to written confirmation of grant approval may not be eligible for reimbursement.

I/We acknowledge receiving, understanding, and accepting the terms and conditions of the City of Sherman Downtown Building Improvement Grant Program, and agree to fully comply with the same along with all other applicable ordinances and other laws, all of which are incorporated herein by reference, if granted funds under the Program. I agree that the City of Sherman is entitled to the immediate return or reimbursement of any and all funds paid to the Applicant or other persons under the Program, plus interest and collection costs, in the event the Applicant fails to complete the work for which the grant was approved or otherwise fails to comply with all applicable Program guidelines and requirements, ordinances and other laws. I/We Applicants further acknowledge and agree that, if funds provided by the City to the Applicant under the Program are determined at any time not to comply with applicable state laws relating to the authorized uses of such funds, all funds paid to the Applicant or other persons under the Program shall be immediately returned or reimbursed to the City.

Chapter 2264 Certification: Pursuant to Chapter 2264 of the Texas Local Government Code, I/We hereby certifies that the Applicant's business, or a branch, division, or department of the Applicant's business, does not and will not knowingly employ an undocumented worker. An undocumented worker means an individual who, at the time of employment, is not lawfully admitted for permanent residence to the United States or authorized under the law to be employed in that manner in the United States. If after receiving this grant from the City of Sherman, Applicant, or a branch, division, or department of Applicant's business, is convicted of a violation under 8 U.S.C. Section 1324a(f), Applicant shall repay the amount of the grant with interest, at the rate and according to the terms provided by this Agreement under Section 2264.053 of the Texas Local Government Code, not later than the 120th day after the date

the Applicant is notified of the violation. I/We agree that this document serves as an agreement under Chapter 380 of the Texas Local Government Code.

I/We agree to indemnify, release, defend and hold harmless the City of Sherman and its officers, employees and agents, from and against all claims, losses, liabilities, damages, suits, actions, or proceedings asserted or brought by any person, including Applicant and the property owner and their respective officers, employees, agents, contractors, and subcontractors, arising out of personal injury, death or property damage from any cause whatsoever in whole or in part arising out of this Agreement or the activities completed hereunder.

Applicant or Authorized Agent of Applicant

Property Owner (if different from Applicant)
or Authorized Agent of Property Owner

VII. Consent of the Owner to the Use and Disclosure of Information

I/We, RP Sherman Properties II, LLC, am the owner of the land that is the subject of this Application, and I/we authorize and consent to the use by or the disclosure to any person or public body, including the City of Sherman, of any personal or other information that is collected for the purposes of processing this application and administering the grant program. (*Note: Information provided in this application will become a public record, subject to disclosure under the Texas Public Information Act and/or Texas Open Meetings Act.)*

7/27/2023
Date

Signature of Owner(s)

WORK BY TRADES OTHER THAN THE ELEVATOR CONTRACTOR

THE FOLLOWING ITEMS ARE NOT INCLUDED IN THE ELEVATOR INSTALLATION CONTRACT, AND MUST BE PROVIDED BY OTHERS. IN ACCORDANCE WITH ASME A17.1 SAFETY CODE FOR ELEVATORS AND ESCALATORS, AND ANY LOCAL CODES WHICH MAY APPLY:

HOISTWAY:

1. PROVIDE A CLEAR AND LEGALLY CONSTRUCTED PLUMB HOISTWAY WITH VARIATION NOT TO EXCEED 1" FOR ENTIRE HEIGHT OF HOISTWAY.
2. PROVIDE HOISTWAY VENTING AS REQUIRED BY LOCAL CODE.
3. PROVIDE 75° BEVEL GUARDS ON ALL PROJECTIONS, RECESSES AND SETBACKS OVER 4", EXCEPT ON SIDES USED FOR LOADING OR UNLOADING.
4. PROVIDE STRUCTURAL SUPPORTS FOR GUIDE RAIL BRACKETS AT LOCATIONS SHOWN BY ELEVATOR CONTRACTOR. SUPPORTS MUST BE DESIGNED TO SUPPORT AND SUSTAIN THE REQUIRED LOADS. FOR DUPLEX HOISTWAY INSTALLATIONS, PROVIDE DIVIDER BEAMS BETWEEN HOISTWAYS, IN LOCATIONS AS REQUIRED, WITH SAME LOAD CARRYING CAPABILITIES.
5. IF REQUIRED, PROVIDE FIREPROOFING AT LOCATIONS WHERE RAIL BRACKETS ARE ATTACHED TO EXPOSED STEEL, AFTER INSTALLATION OF RAILS AND BRACKETS.
6. IF INSERTS ARE TO BE USED FOR RAIL BRACKET ATTACHMENT, THE INSERTS WILL BE FURNISHED BY THE ELEVATOR CONTRACTOR AND INSTALLED BY OTHERS AS WALLS ARE ERECTED. INSERTS MUST BE INSTALLED TO ASSURE THAT SUPPORT REQUIREMENTS ARE MAINTAINED.
7. PROVIDE A HOISTING BEAM OR HOOK AT TOP OF HOISTWAY, LOCATED ON CENTERLINE GUIDES, OF SUFFICIENT STRENGTH TO SUPPORT THE WEIGHT OF THE CAR AND PLUNGER. 5,000
8. A DRY PIT OF PROPER DEPTH, DESIGNED TO SUPPORT AND SUSTAIN THE VERTICAL FORCES FROM THE JACK UNIT AND BUFFERS, MUST BE PROVIDED.
9. PROVIDE A VERTICAL LADDER OF NON COMBUSTIBLE MATERIAL, EXTENDING FROM PIT FLOOR TO MIN. OF 48" ABOVE LOWEST LANDING. THIS LADDER MUST BE 16" CLEAR INSIDE WIDTH AND 4 1/2" MIN FROM CENTER OF RUNG TO WALL, AND 12" CENTER TO CENTER.
10. FOR SYSTEMS WITH "IN-GROUND" JACK UNITS, A 30" SQUARE HOLE IS TO BE LEFT IN THE PIT FLOOR, CENTERED AT THE JACK LOCATION, AND TO BE GROUTED IN BY OTHERS AFTER JACK UNIT (OR CASING) HAS BEEN INSTALLED.
    IF "HOLELESS" SYSTEM IS PROVIDED, IT MAY SOMETIMES BE NECESSARY TO PROVIDE PARTIAL HOLES FOR JACK UNITS. THESE HOLES MAY NOT BE GROUTED IN AFTER INSTALLATION OF JACK UNITS (SEE CONTRACT AND LAYOUTS FOR PARTICULARS).
11. PROVIDE ANY REQUIRED HOLES, SLEEVES, OR TRENCHES WITH FILLING OR GROUTING IN THE HOISTWAY AND MACHINE ROOM WALLS, CEILING, OR FLOOR FOR INSTALLATION OF OIL LINE AND WIRING MATERIALS.
12. PROVIDE ANY RECESSES, CUTTING OR PATCHING OF THE BUILDING CONSTRUCTION NECESSARY THEREBY.
13. PROVIDE AND INSTALL ANY NECESSARY BARRICADES OR PARTITIONS.
14. PROVIDE PROPER SILL SUPPORTS AND RECESSES AS SHOWN ON LAYOUTS, AND GROUT IN AS REQUIRED AFTER INSTALLATION OF SILLS.
15. ENTRANCE WALLS AND FINISHED FLOOR ARE NOT TO BE ERECTED OR INSTALLED UNTIL AFTER DOOR FRAMES ARE COMPLETELY INSTALLED AND ALIGNED (SEE LAYOUTS FOR PERMISSIBLE ROUGH OPENING SIZES).
16. DOOR FRAMES ARE TO BE PROPERLY GROUTED AFTER INSTALLATION TO ASSURE LEGAL FIRE RATING.
17. PROVIDE SUITABLE STRUCTURAL DOOR FRAMES AND SILLS FOR FREIGHT OR SERVICE ELEVATORS WITH VERTICAL BI-PARTING DOORS. DOOR FRAMES AND SILLS MUST BE DESIGNED AND INSTALLED TO SUPPORT THE IMPOSED LOADS. JAMBS MUST RETURN ON HATCH SIDE AND EXTEND ABOVE OPENING AS PER FREIGHT ELEVATOR DOOR DRAWINGS.

17A. ACCESS DOOR FOR GOVERNOR RESET. (IF REQUIRED)

ELEVATOR MACHINE ROOM:

18. PROVIDE A LEGALLY CONSTRUCTED AND ENCLOSED MACHINE ROOM, ADEQUATELY LIGHTED, AND CONDITIONED TO MAINTAIN TEMPERATURE BETWEEN 65° TO 95° FAHRENHEIT, RELATIVE HUMIDITY IS NOT TO EXCEED 95% NON-CONDENSING.
19. MACHINE ROOM DOOR TO BE SIZED FOR ACCESS OF ELEVATOR POWER UNIT, ABLE TO OPEN FROM INSIDE WITHOUT USE OF KEY AND MUST BE SELF CLOSING AND LOCKING.
20. MACHINE ROOM MUST BE OF ADEQUATE SIZE TO PROVIDE CLEARANCES AROUND AND BETWEEN EQUIPMENT AS REQUIRED BY CODE.
21. PROVIDE A ABC FIRE EXTINGUISHER IN THE MACHINE ROOM MOUNTED ON THE DOOR STRIKE WALL.

ELECTRICAL: (ALL ELECTRICAL TO BE IN ACCORDANCE WITH REQUIREMENTS OF ANSI/NFPA 70.)

22. PROVIDE 110 VAC SERVICE FOR ELEVATOR LIGHT AND ACCESSORIES CONNECTED TO THE CAR LIGHT SERVICE TERMINAL ON THE ELEVATOR CONTROLLER IN THE MACHINE ROOM. A SINGLE DISCONNECTING MEANS FOR THE CAR LIGHT AND ACCESSORIES SHALL BE LOCATED IN THE MACHINE ROOM AND ARRANGED TO BE LOCKED IN THE OPEN POSITION.
23. PROVIDE A 110 VAC OUTLET IN THE ELEVATOR PIT.
24. PROVIDE A GUARDED LIGHT AND SWITCH IN THE ELEVATOR PIT. LIGHT FIXTURE MUST BE LOCATED TO CLEAR THE ELEVATOR CAR AND SWITCH MUST BE ACCESSIBLE FROM THE LOWEST LANDING.
25. PROVIDE LIGHT, SWITCH AND 110 VAC GFI OUTLET IN THE MACHINE ROOM, WITH SWITCH LOCATED ADJACENT TO THE MACHINE ROOM.
26. IF ELEVATOR SYSTEM IS MULTIPLE OPERATION, SUPPLY ADDITIONAL SEPARATE 110 VAC POWER SOURCE IN THE ELEVATOR MACHINE ROOM.
27. PROVIDE A FUSED DISCONNECT SWITCH FOR EACH ELEVATOR IN THE MACHINE ROOM, LOCATED IN A POSITION BASED ON LOCAL CODE AND WITHIN SIGHT OF ELEVATOR EQUIPMENT, AND ARRANGED TO BE LOCKED IN THE OFF POSITION. THE DISCONNECT SWITCH AND WIRING SHALL BE OF AMPLE CAPACITY FOR THE ELEVATOR MOTOR AND EQUIPMENT AND WIRING SHALL BE EXTENDED FROM THIS SWITCH TO THE TERMINALS ON THE ELEVATOR MOTOR STARTER PANEL. IF THE ELEVATOR POWER UNIT INCLUDES A MULTIPLE MOTOR ARRANGEMENT, SEPARATE FUSING MUST BE PROVIDED FOR EACH MOTOR, BUT ALL MOTORS MUST BE DISCONNECTED BY A SINGLE SWITCH LEVER.
28. IF ELEVATOR IS TO OPERATE FROM AN EMERGENCY POWER GENERATOR (PROVIDED BY OTHERS), PROVIDE AN ISOLATED CONTACT IN THE DISCONNECT SWITCH TO SIGNAL WHEN SYSTEM IS OPERATING ON EMERGENCY POWER WITH A SINGLE LEVER.
29. IF ELEVATOR IS TO OPERATE FROM A BATTERY POWERED EMERGENCY LOWERING DEVICE, PROVIDE AN AUXILIARY DRY CONTACT TO THE ELEVATOR CONTROLER IN THE DISCONNECT SWITCH AND THE SHUNT TRIP BREAKER TO THE ELEVATOR CONTROLER.
30. WHEN FIRE SERVICE IS INCLUDED, PROVIDE SMOKE SENSING DEVICES IN EACH ELEVATOR LOBBY AND OTHER LOCATIONS AS REQUIRED BY CODE. HEAT SENSORS MUST BE WITHIN 24" OF ANY SPRINKLERS AND MUST BE ARRANGED TO INTERFACE WITH ELEVATOR CONTROL EQUIPMENT AND WIRING FROM THESE DEVICES IS TO BE EXTENDED TO THE TERMINALS OR THE ELEVATOR CONTROLLER IN THE MACHINE ROOM.
31. PROVIDE A DEDICATED LINE FOR TELEPHONE TO TERMINALS ON THE ELEVATOR CONTROL PANEL IN THE MACHINE ROOM. PROVIDE TELEPHONE INSTRUMENT IF NOT SPECIFIED AS BEING PROVIDED BY THE ELEVATOR CONTRACTOR. TELEPHONE MUST BE ANSWERED 24 HOURS A DAY-7 DAYS A WEEK, BY A PROVIDED SERVICE.
32. PROVIDE ANY INTERCOM, PAGING, TELEVISION OR MONITORING SYSTEMS, AND ALL WIRING TO THE ELEVATOR MACHINE ROOM CONTROL PANEL FOR DEVICES THAT ARE REQUIRED, BUT NOT SPECIFIED AS FURNISHED BY ELEVATOR CONTRACTOR.

GENERAL:

33. PROVIDE NECESSARY POWER AT ELEVATOR LOCATION, FOR INSTALLING AND ADJUSTING, WITHOUT CHARGE.
34. PROVIDE A SECURE, DRY SPACE FOR STORAGE OF ELEVATOR EQUIPMENT AND TOOLS AND SUPPLIES. SPACE SHALL BE AVAILABLE AT TIME OF RECEIPT OF EQUIPMENT AT THE JOB SITE AND DURING INSTALLATION.
35. PROVIDE ANY ITEM OR DETAIL REQUIRED, FOR THE INSTALLATION BUT NOT SPECIFICALLY SPECIFIED AS BEING FURNISHED BY THE ELEVATOR CONTRACTOR.
36. PROVIDE SUMP PIT AND PUMP AS PER APPLICABLE ASME A17.1 CODE FOR ELEVATORS, SECTION 2.2.2.5. HOLDING TANK TO BE IN ACCORDANCE WITH LOCAL BUILDING CODES.

SPECIFICATIONS AND DATA

CAR NO.	PE-1
CLASSIFICATION	PASSENGER
TYPE	TWIN JACK SINGLE STAGE HOLELESS
CAPACITY	3,000 LBS
RATED SPEED	100 F.P.M.
TRAVEL	14'-0" (A)
NO. LANDINGS	2
NO. OF OPENINGS	3
FRONT OPENINGS	2 (A)
REAR OPENINGS	1 (A)
DOOR TYPE	SINGLE SPEED (RIGHT HAND FRONT, LEFT HAND REAR)
DOOR SIZE	3'-6"W x 7'-0"H
PLATFORM SIZE	7'-0"W x 5'-11"D
RECESS FOR FLOORING	1/4"
DOOR OPERATOR	GAL MOVFR
CAR DOOR PROTECTION	INFRARED LIGHT CURTAIN
GUIDE RAILS	12 LBS/FT.
GUIDE SHOES	ELPRO 816SSC SWIVEL GUIDES
STILES	8" CHANNEL
OPERATION	SELECTIVE / COLLECTIVE
FIRE SERVICE	PHASE I & II w/ALTERNATE
LOBBY / ALTERNATE FLOOR	*1 / 2
SIGNALS / VOLTAGE	SEE FIXTURE PRINTS
CONTROL VALVE / COILS	MAXTON UC4M / 120 VAC
CONTROLLER	SMARTRISE
SEISMIC ZONE	ZONE 1
ELEVATOR CODE AND YR	ASME-A17.1 2016

TECHNICAL DATA

CAR NO.	PE-1
POWER SUPPLY	208V / 3PH / 60Hz
POWER UNIT	SUBMERSIBLE
PUMP	IMO
MOTOR HP/STARTS PER HR	30 HP (80 ST/HR)
FL / LR AMPS	FLA = 90 / LRA = 471 DELTA, 157 WYE
WORKING/STATIC PRESSURE	388 / 186 PSI
FLOW RATE	104 GPM
JACK MANUFACTURER	DL MARTIN
PLUNGER O.D.	3.50"
PLUNGER WALL	.216"
PLUNGER STROKE	15'-0" (A)
CYLINDER O.D.	5.00"
CYLINDER WALL	.250"
CYLINDER LENGTH	15'-5 7/8" (A)
CYLINDER PROTECTION	N/A
CAR WEIGHT	3,569 LBS
PLUNGER WEIGHT	226 LBS
GROSS LOAD	6,795 LBS
ASTM PIPE GRADE	SCHEDULE 40
OIL LINE SIZE	2" VICTAULIC
OIL TO FILL SYSTEM	105 GALLONS
BUFFER STROKE	2 1/2"
TOP/BOTTOM OVERTRAVEL	5" TOP / 7" BOTTOM (A)

INCLUDED OPTIONS

LOW PRESSURE SWITCH		
VISCOSITY TEMP SWITCH		
SHUT OFF BALL VALVES		

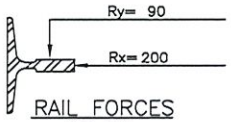

RAIL FORCES
PER RAIL

	LBS.
GROSS LOAD	6,795
LOAD ON JACK ASSEMBLY	14,490
LOAD ON BUFFER SPRINGS	18,280

NOTE: ALL ELEVATOR EQUIPMENT IS BUILT PER ASME A17.1 CODE. IT IS THE ELEVATOR CONTRACTORS RESPONSIBILITY TO INFORM THE MANUFACTURER OF ANY STATE AND/OR LOCAL CODE REQUIREMENTS THAT DEVIATE FROM ASME A17.1.

FINAL

REVISION RECORD

REV	DATE	BY	CHKD	DESCRIPTION
	09/14/22	MCA		PRELIMINARY FOR APPROVAL
A	10/06/22	MCA		FINAL LAYOUT - RELEASE TO PRODUCTION (TRAVEL UPDATE TO 14'-0")

ELEVATOR LAYOUT PE-1

HIGH TECH ELEVATOR
802 EASY STREET
GARLAND, TX 75042
PHONE: (469) 562-4739

PROJECT
219 WASHINGTON

DALLAS, TX

ARCHITECT

GENERAL CONTRACTOR

CONTRACT NO. 1222 | SHEET 1 OF 3 | REV A

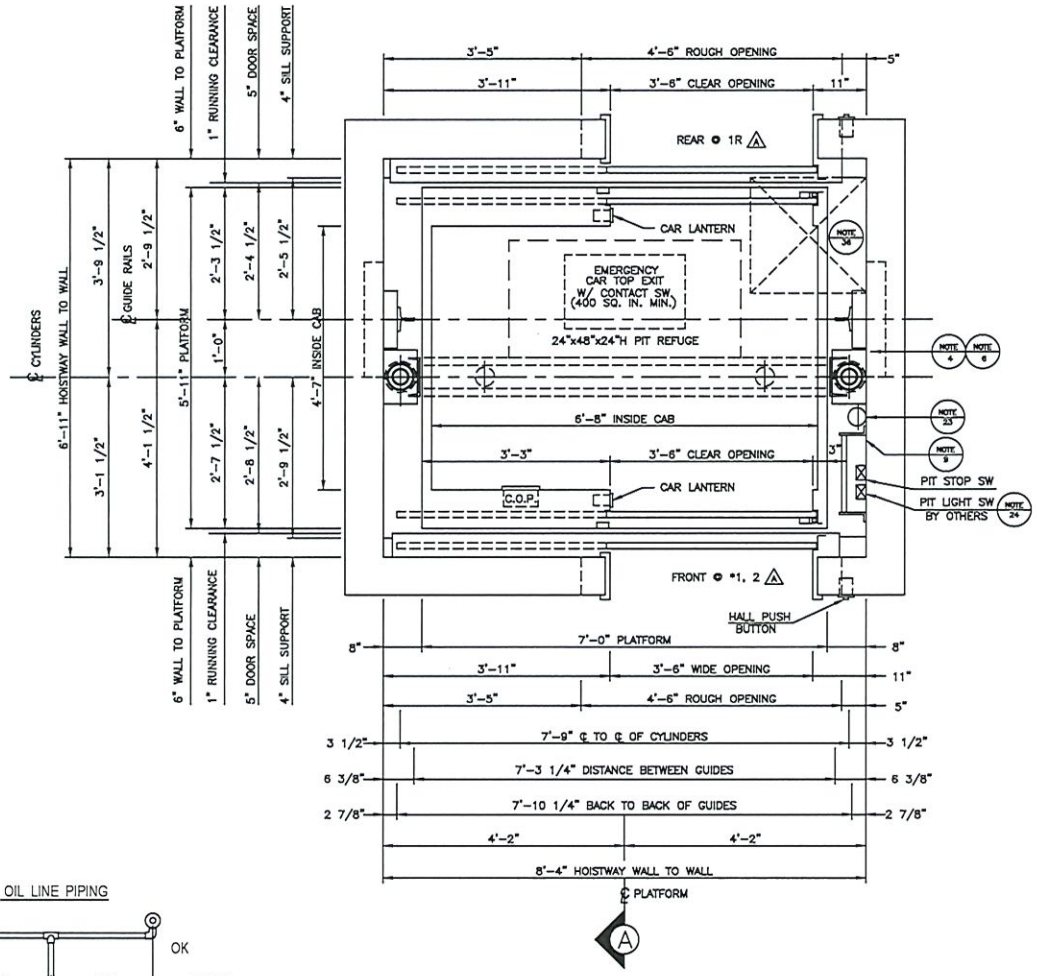

HOISTWAY PLAN

SCALE: 1/2" = 1'-0"

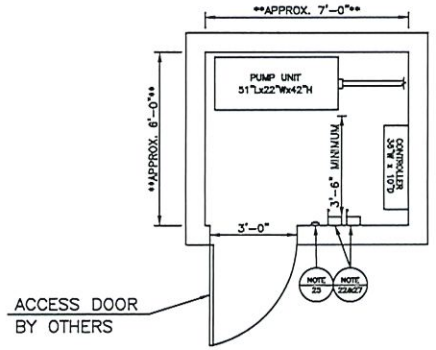

MACHINE ROOM NOTES:

NOTE: MACHINE ROOM LOCATED ADJACENT TO HOISTWAY AT LOWEST LANDING

HEAT RELEASE: 11,880 BTU/HR PER ELEVATOR (SEE NOTES 18-21)

NOTE: MACHINE ROOM CLIMATE CONTROL EQUIPMENT AND/OR ANY RELATED CONDENSATION DRAINS FROM SAID EQUIPMENT SHALL NOT BE LOCATED ABOVE ANY ELECTRICAL OR ELEVATOR EQUIPMENT (ASME A17.1-2.8.5).

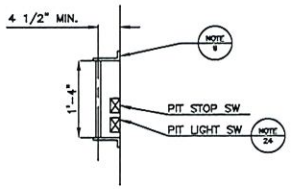

PIT LADDER DETAIL

OIL LINE PIPING

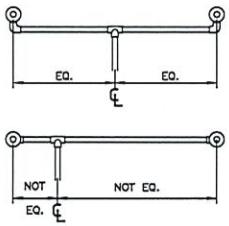

NOTE:
1. IF THREADED - UNIONS MAY BE REQUIRED.
2. TEE MUST BE ON CENTER.

FINAL

ELEVATOR LAYOUT PE-1

HIGH TECH ELEVATOR

802 EASY STREET
GARLAND, TX 75042
PHONE: (469) 562-4739

PROJECT
219 WASHINGTON

DALLAS, TX

ARCHITECT

GENERAL CONTRACTOR

CONTRACT NO. 1222 | SHEET 2 OF 3 | REV A

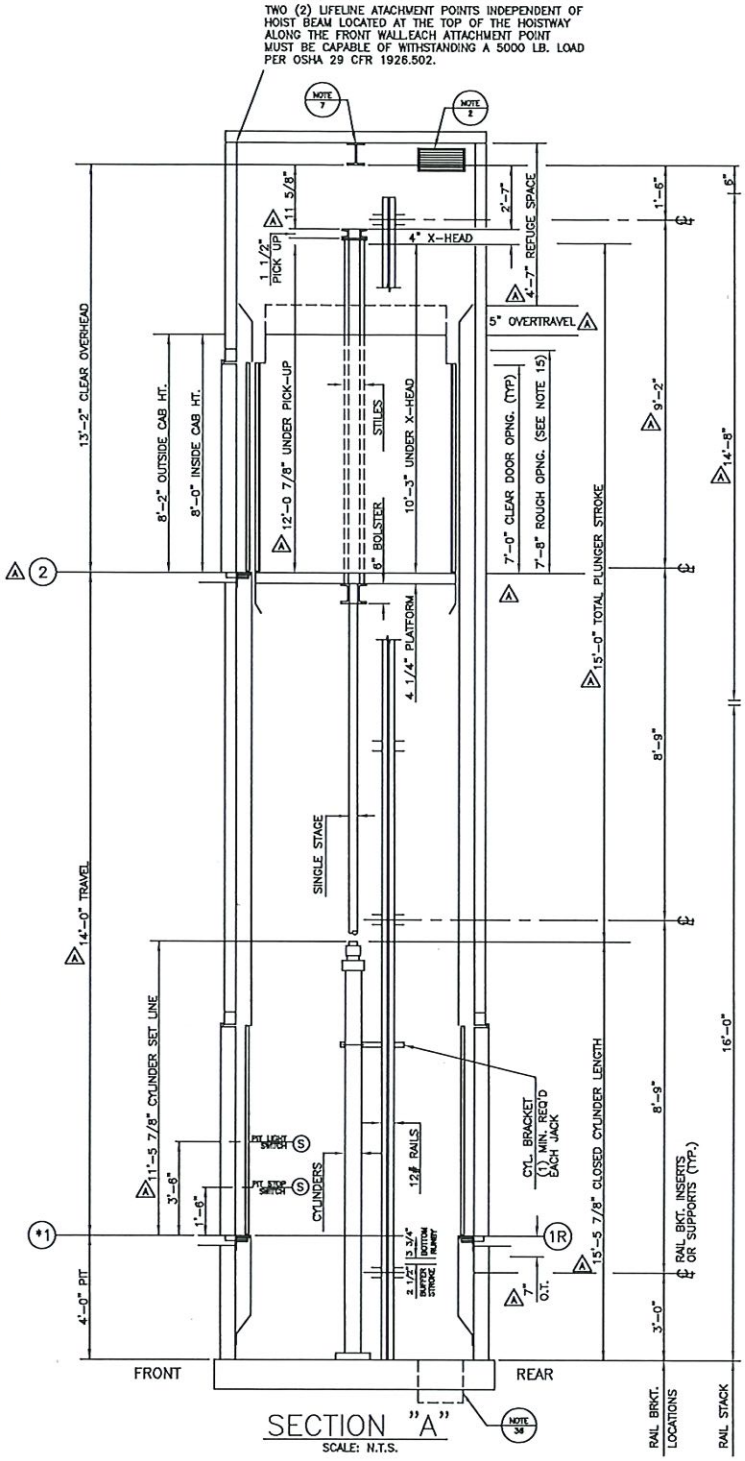

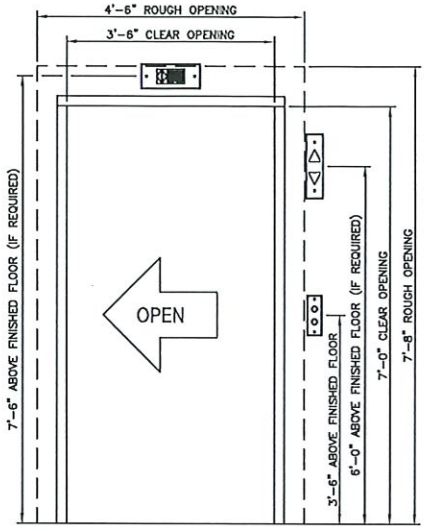

ROUGH OPENING REQUIREMENTS
RIGHT-HAND (FRONT)
REAR OPPOSITE

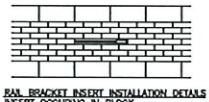

RAIL BRACKET INSERT INSTALLATION DETAILS
INSERT OCCURING IN BLOCK WALL TO BE SET IN COURSES OF BRICK BY GENL CONTR.

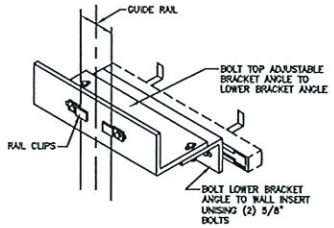

ARRANGEMENT OF ATTACHING RAIL BRACKET TO MASONRY INSERT IN CMU WALL

NOTE: THE MAXIMUM VERTICAL RAIL BRACKET AND SUPPORT SPACING NOT TO EXCEED 12'-0" UNDER ANY CIRCUMSTANCES.

NOTE: BOTH CYLINDERS MUST BE SET EQUALLY SO WHEN FULLY EXTENDED BOTH STOP RINGS IMPACT AT THE SAME TIME.

NOTE: OVER TRAVELS PLAY A MAJOR ROLE IN KEEPING THE PISTONS SYNCHRONIZED. IF THE ACTUAL BUILDING TRAVEL IS NOT WITHIN 1" OF THE TRAVEL SHOWN, THE CYLINDERS WILL NOT OPERATE PROPERLY. THE OVER TRAVELS CANNOT BE USED TO MAKE UP FOR ANY BUILDING TRAVEL ERRORS.

FINAL

ELEVATOR LAYOUT PE-1

HIGH TECH ELEVATOR
802 EASY STREET
GARLAND, TX 75042
PHONE: (469) 562-4739

PROJECT
219 WASHINGTON

DALLAS, TX

ARCHITECT

GENERAL CONTRACTOR

CONTRACT NO. 1222 | SHEET 3 OF 3 | REV A

219-221 W. Houston PHASE TWO Improvements

Phase TWO includes an elevator for the Kreager Building,
Complete exterior weatherproofing and repairs and façade updates.

	d2Built	Pintrail Restoration
Demilition	6,000	7,000
Elevator Pit - Excavation, Concrete, Rough Plumb	11,400	13,000
Elevator Shaft - Block Material And Labor	24,800	26,500
Elevator Material and Labor	146,000	155,000
Misc - Permits, Fees, Other	19,000	25,800
Electrical - Elevator	14,000	16,200
Complete Elevator Installation	221,200	243,500

RESOLUTION NO. 7025

A RESOLUTION OF THE CITY COUNCIL OF THE CITY OF SHERMAN, TEXAS, DECLARING THE CITY OF SHERMAN'S INTENTION TO PARTICIPATE IN AN ECONOMIC DEVELOPMENT PROGRAM TO PROMOTE DEVELOPMENT/REDEVELOPMENT IN TAX INCREMENT REINVESTMENT ZONE NUMBER 2; ESTABLISHING GUIDELINES AND CRITERIA; FINDING AND DETERMINING THAT THE MEETING AT WHICH THIS RESOLUTION IS PASSED WAS NOTICED AND IS OPEN TO THE PUBLIC AS REQUIRED BY LAW.

BE IT RESOLVED BY THE CITY COUNCIL OF THE CITY OF SHERMAN, TEXAS:

SECTION 1. That the City of Sherman intends to participate in an economic development program to promote development/redevelopment in Tax Increment Reinvestment Zone Number 2 and to establish program guidelines.

SECTION 2. That it is hereby officially found and determined that the meeting at which this resolution is passed is open to the public and that public notice of the time, place, and purpose of said meeting was given as required by law.

DULY PASSED AND APPROVED BY THE CITY COUNCIL OF THE CITY OF SHERMAN, TEXAS on this the 6th day of February 2023.

CITY OF SHERMAN, TEXAS

BY: _____
DAVID PLYLER, MAYOR

ATTEST:

BY: Linda Ashby
LINDA ASHBY, CITY CLERK

APPROVED AS TO FORM:
THE LAW FIRM OF ABERNATHY, ROEDER, BOYD & HULLETT, P.C.

BY: _____
RYAN D. PITTMAN, CITY ATTORNEY

Sherman
CLASSIC TOWN. BROAD HORIZON.

Downtown Building Improvement Grant

Guidelines and Policies

Policy Statement

The Downtown Building Improvement Grant program is designed to stimulate improvements to existing, historic buildings in the downtown Tax Increment Reinvestment Zone of the City of Sherman, Texas. The goal of this program is to enhance the physical appearance and economic vitality of downtown Sherman, and to promote public/private investment to complement ongoing historical revitalization efforts.

Program Description

This program is designed to make positive, high-impact visual improvements to historically significant commercial and residential buildings by providing an overall enhanced image for downtown Sherman, thereby attracting visitors to shop, dine, and do business downtown.

The program provides a maximum grant of $50,000 per project, per year as a matching monetary incentive to the owners or tenants of historically significant commercial or residential properties in the downtown TIRZ.

In most cases, for every $4 the applicant invests in the renovation or improvement of the subject property, the City will reimburse $1 of qualified expenditures, up to the maximum grant authorized by the City Council, not to exceed $50,000 per project, per year.

For improvements required by any City of Sherman department – including but not limited to grease traps, sprinkler systems, and plumbing improvements – the City will reimburse $1 for every $2 spent by the applicant, up to $50,000 per project, per year.

Likewise, any portion of a project to restore a historic façade (e.g. removing "modernized" cladding to reveal original architecture), is eligible for the increased 2:1 match. The City Council retains authority to decide the final matching amount and funding ratio on any project.

Any City building permit for work covered under this grant will not be charged any fees for those permits. However, this provision is NOT retroactive and applies only to building permit fees incurred after approval.

Eligibility

Historic buildings within the downtown TIRZ that are of a commercial, residential, retail, service, or professional use are eligible to participate in the program. For the purposes of this grant, "historic" refers to any building built more than 50 years before the current year.

Assistance under this program will be considered subject to the availability of funding and subject to the approval of the City Council.

Minimum Guidelines

To be approved for a grant under this program, projects must make a substantial improvement to the building, at the discretion of City staff and City Council. Routine upgrades such as painting are considered maintenance, not an improvement.

Building improvements should maintain the character of the downtown area. Program funds shall be made available only to projects that enhance and are sensitive to the historical nature of the structure. The design drawings must be approved by the City in order to access funding for improvement.

Buildings improved with funds from this program must remain occupied for at least 4 of the 5 years following the completion of the project. Any applicant who fails to satisfy this requirement will not be eligible for additional grants under this program, and the City reserves the right to claw back funds paid to the applicant under this program. For the purposes of this grant, "Occupied" refers to ongoing commercial, residential, retail, service, or professional use, and does not include passive uses such as storage, as determined by the City in its sole discretion.

Retroactive applications will not be accepted. Only work that is currently underway or has yet to begin at the time of approval qualifies for reimbursement.

Grants are provided on a first-come, first-served basis. The City reserves the right to amend or modify these Guidelines and program eligibility and requirements at any time.

Additional requirements:

- Improvements to be undertaken shall conform to the City's then-current codes and any other then-current policies and regulations applying to the subject property.
- For properties with multiple storefronts, it is recommended that the façade treatment provide a cohesive theme while also allowing for some distinctive design elements to the various businesses, such as signage, exposing transom windows, lighting, flower boxes, murals, etc., to provide better street visibility and promote economic development downtown.

- Permits for any project under this program must be obtained no more than six (6) months after Council approval. The approval of an application under this program is considered null and void if this requirement is not met or if permits have expired without the work being completed. If those permits expire, the applicant must re-apply.

- Any project with a verified, third-party bid for work totaling more than $500,000 is eligible to be considered for a grant for each budget year during which work is ongoing, so long as the total amount granted in the previous year has been exhausted. Applicants will be eligible for a second grant covering only the remaining, unpaid work, not for work that has already been completed.

Eligible Improvements

Eligible improvements must be permanent in nature as determined by the City of Sherman in its sole discretion. All improvements must be consistent with the City of Sherman Master Plan, zoning ordinance, building regulations, and other applicable laws. Eligible costs include the cost of materials, equipment, and contracted labor to complete eligible improvements, including, but not limited to, the following:

- Commercial code compliance renovations
- Permanent commercial interior remodeling improvements
- Permanent commercial site (exterior) improvements
- Compliance with Americans with Disabilities Act (ADA) for commercial properties
- Work necessary to bring the structure up to life-safety code standards
- Installation, repair, and replacement of exterior doors and hardware
- Repair, replacement, or addition of exterior shutters and awnings/canopies
- Repair, replacement, or purchase of signs (when performed as part of an overall façade improvement)
- Repair and replacement or installation of interior and exterior stairs, porches, railings, and exit facilities
- Repair and rebuilding of interior and exterior walls, including cleaning, sealing, tuckpointing and painting
- Repair or replacement of frames, sills, glazing, replacement of glass and installation of new windows
- Installation of permanently affixed landscaping, such as stone or brick planters
- Installation, repair, or replacement of exterior lighting
- Mechanical, including rewiring, replumbing, insulation, mechanical systems/climate control

Ineligible Improvements include:

- Furnishings and equipment purchases
- Working capital
- Inventory financing
- Title reports and legal fees
- Extermination of insects, rodents, vermin, and other pests
- Improvements that do not comply with City of Sherman Master Plan, Zoning Ordinance, Building Regulations, and other applicable laws

Application Process

Program Application and Agreement forms are available on the City of Sherman website, www.cityofsherman.com. The application process is as follows:

After reviewing the program guidelines, the applicant will meet with City staff to discuss the work to be undertaken. If the proposed work is within the program guidelines, as determined by City staff in its sole discretion, a completed application is submitted to the City. Written bids, sketches, color samples, and material supplies should be included with the complete application, as well as proof of ownership or a lease agreement. The applicant is responsible for submitting plans and specifications to the City and obtaining all required planning and building permits, and any other applicable approvals.

The Sherman City Council will consider the recommendations made by the City staff and will make its decision in a public meeting.

Deviations from approved plans and specifications may disqualify the applicant from reimbursement under this grant program unless those changes are approved by City staff. False or incomplete information submitted by the applicant to the City also shall disqualify the applicant for reimbursement. Any applicant disqualified for these reasons or denied for a grant has the right to appeal to the City Manager, who will make a final determination. Any appeals must be in writing, state the grounds for the appeal, and submitted within 10 days of the date of disqualification or denial.

Funds will be reimbursed only after payment has been made by the applicant. Reimbursement claims for all eligible expenses must be submitted along with cancelled checks and matching invoices/receipts for eligible work. Any invoices paid more than eighteen months after City Council approval of a grant application is not eligible for reimbursement. The City reserves the right to require the return of funds provided, plus interest and collection costs, in the event the applicant fails to complete the work or otherwise fails to comply with any applicable program guidelines and requirements, ordinances or other laws.

Sherman
CLASSIC TOWN. BROAD HORIZON.

Downtown Tax Increment Reinvestment Zone

An online version of this map is available here:
https://experience.arcgis.com/experience/6000d76bee8f4c47a07f21e9a9ceae6a

Downtown Building Improvement Grant Application and Agreement

The information requested below will be used to process your application under the terms and conditions of the City of Sherman's Downtown Building Improvement Grant. All grant applications must include pictures of the current building, designs or renderings of the finished product, and historical pictures, if available.

I. Applicant Information

1. Applicant(s) name:_____

   Mailing address:_____

   City:_____ State:_____ Zip:_____

2. Applicant's daytime telephone number:_____

   E-mail address:_____

3. Status of applicant (please check one)
   - ____ Property owner with vacant facility
   - ____ Property owner with tenant business
   - ____ Property owner/operator of existing business on property
   - ____ Property tenant with property owner consent
   - ____ Property deed, lease, or other document evidencing applicant's status

5. Length of ownership/ lease: _____
   Date purchased/ leased: _____

II. Property Information

1. Address of property to be improved: _____

2. Legal description of subject property:

   _____

   _____

3. Grayson County Tax Assessor Parcel Number(s):

   _____

4. Year built: _____ Square footage: _____
   (Eligible buildings must be at least 50 years of age.)

6. What are the current types of businesses or other uses occupying the building?

   _____

   _____

   _____

7. Name and phone number of tenant(s), if applicable: _____

_____

(Attach additional names/numbers, if needed)

8. Use of building after construction: _____

_____

9. Number of parking spaces provided: _____ Proposed:_____ Total:_____

10. Current zoning:_____

11. Is a zoning amendment required? Yes___ No___

III. Project Description

1. Description of Proposed Improvements. Please provide a detailed description of your proposed improvements. Attach a copy of your architectural or design plans.

Description:_____

_____

_____

_____

_____

_____

_____

_____

_____

_____

_____

☐ Designs Attached	☐ "Before" Picture(s) Attached

2. How many jobs will be **retained** once the project is completed?

_____ Full-time positions _____ Part-time positions

3. How many **new positions** will result from this project?

_____ Full-time positions _____ Part-time positions

IV. Work Estimates

Please attach a minimum of two (2) independent contractor estimates for the proposed improvements. Please note that grant funding shall be based on the lowest bid. Eligible costs shall be the cost of materials, equipment, and contracted labor to complete eligible improvements.

1. Name/Company and Phone Number of Preferred Contractor:

_____

_____

Amount:_____

2. Name/Company and Phone Number of Second Contractor:

_____

_____

Amount: _____

3. Additional Estimates/Comments: (Please attach additional quotes, as required)

4. Total estimated costs of your improvements: _____

5. Estimated completion date for your improvements? _____

VI. Agreement of Applicant and Property Owner

I/We, _____, of the City of Sherman, County of Grayson, State of Texas, declare under penalty of perjury that the information contained in this application is true and correct and that the information contained in the documents that accompany this application is true, correct, and complete. I/We certify and warrant that the proposed work described in this Application meets the eligibility requirements of the City of Sherman Downtown Building Improvement Grant Program. In exchange for the City of Sherman's consideration of this application, I/We hereby agree to the following:

I/We hereby authorize City of Sherman employees and agents to perform inspections of my/our property if granted funds under the City of Sherman Downtown Building Improvement Grant Program, both before and during the work for which funds are granted under this Program and after completion of the work to ensure compliance with the terms and conditions of the Program and all other applicable ordinances and other laws.

I/We acknowledge that any work carried out prior to written confirmation of grant approval may not be eligible for reimbursement.

I/We acknowledge receiving, understanding, and accepting the terms and conditions of the City of Sherman Downtown Building Improvement Grant Program, and agree to fully comply with the same along with all other applicable ordinances and other laws, all of which are incorporated herein by reference, if granted funds under the Program. I agree that the City of Sherman is entitled to the immediate return or reimbursement of any and all funds paid to the Applicant or other persons under the Program, plus interest and collection costs, in the event the Applicant fails to complete the work for which the grant was approved or otherwise fails to comply with all applicable Program guidelines and requirements, ordinances and other laws. I/We Applicants further acknowledge and agree that, if funds provided by the City to the Applicant under the Program are determined at any time not to comply with applicable state laws relating to the authorized uses of such funds, all funds paid to the Applicant or other persons under the Program shall be immediately returned or reimbursed to the City.

Chapter 2264 Certification: Pursuant to Chapter 2264 of the Texas Local Government Code, I/We hereby certifies that the Applicant's business, or a branch, division, or department of the Applicant's business, does not and will not knowingly employ an undocumented worker. An undocumented worker means an individual who, at the time of employment, is not lawfully admitted for permanent residence to the United States or authorized under the law to be employed in that manner in the United States. If after receiving this grant from the City of Sherman, Applicant, or a branch, division, or department of Applicant's business, is convicted of a violation under 8 U.S.C. Section 1324a(f), Applicant shall repay the amount of the grant with interest, at the rate and according to the terms provided by this Agreement under Section 2264.053 of the Texas Local Government Code, not later than the 120th day after the date

the Applicant is notified of the violation. I/We agree that this document serves as an agreement under Chapter 380 of the Texas Local Government Code.

I/We agree to indemnify, release, defend and hold harmless the City of Sherman and its officers, employees and agents, from and against all claims, losses, liabilities, damages, suits, actions, or proceedings asserted or brought by any person, including Applicant and the property owner and their respective officers, employees, agents, contractors, and subcontractors, arising out of personal injury, death or property damage from any cause whatsoever in whole or in part arising out of this Agreement or the activities completed hereunder.

_____

Applicant or Authorized Agent of Applicant

_____

Property Owner (if different from Applicant)
or Authorized Agent of Property Owner

VII. Consent of the Owner to the Use and Disclosure of Information

I/We, _____, am the owner of the land that is the subject of this Application, and I/we authorize and consent to the use by or the disclosure to any person or public body, including the City of Sherman, of any personal or other information that is collected for the purposes of processing this application and administering the grant program. (*Note: Information provided in this application will become a public record, subject to disclosure under the Texas Public Information Act and/or Texas Open Meetings Act.)*

_____ _____

Date Signature of Owner(s)

SHERMAN CITY COUNCIL
Agenda Communication Form

City Council Regular Meeting Agenda Item No. H.13.

Meeting Date: 4/15/2024

Prepared By: Eric Sandberg, Quality Services Manager

Approved By: Teri Fine, Assistant to the City Manager

Caption:

**** RESOLUTION NO. 7293***

Awarding a Bid to and Authorizing Execution of a Contract with North Texas Winwater Co. for the Annual Supply of Water and Sewer Maintenance Parts and Supplies

Issue:

To consider awarding and authorizing execution of a contract with North Texas Winwater Co. of Anna, Texas, based on a Request for Proposals (RFP), for the annual supply of water and sewer maintenance parts and supplies.

Background:

At the March 4, 2024 meeting, the City Council authorized a request to advertise for the solicitation of proposals for the annual supply of water and sewer maintenance parts and supplies. A public request for competitive, sealed proposals resulted in three (3) submittals, which were opened on March 28, 2024. North Texas Winwater Co. of Anna, Texas, received the highest valuation, based on specific criteria detailed in the Request for Proposals.

Origination:

Distribution Services

Financial Consideration:

The proposed cost is approximately $2,549,822.49, with available funding in the current year FY2024 budget.

Staff Recommendation:

Staff recommends that City Council award the annual contract to North Texas Winwater Co. of Anna, Texas.

Alternatives:

As may be directed by the City Council

Attachments:

1. Resolution No. 7293
2. Signed Agreement_ North Texas Winwater Co
3. Exhibit A_Water and Sewer Maintenance Parts and Supplies RFP
4. Exhibit B_Bid Submittal_North Texas Winwater Co
5. Exhibits C through E_North Texas Winwater Co
6. Evaluation_Water and Sewer Maintenance P & S

RESOLUTION NO. 7293

A RESOLUTION OF THE CITY COUNCIL OF THE CITY OF SHERMAN, TEXAS, AWARDING A BID TO AND AUTHORIZING EXECUTION OF A CONTRACT WITH NORTH TEXAS WINWATER CO. FOR THE ANNUAL SUPPLY OF WATER AND SEWER MAINTENANCE PARTS AND SUPPLIES; FINDING AND DETERMINING THAT THE MEETING AT WHICH THIS RESOLUTION IS PASSED WAS NOTICED AND IS OPEN TO THE PUBLIC AS REQUIRED BY LAW.

BE IT RESOLVED BY THE CITY COUNCIL OF THE CITY OF SHERMAN, TEXAS:

SECTION 1. That North Texas Winwater Co. of Anna, Texas, is hereby awarded the bid for the annual supply of water and sewer maintenance parts and supplies in the amount of Two Million Five Hundred Forty-Nine Thousand Eight Hundred Twenty-Two Dollars and Seventy-Nine Cents ($2,549,822.79)**;** and that the City Manager be and is hereby authorized and directed, subject to all contract documents being properly completed and approved as to form and content by the City Attorney, to execute a contract with North Texas Winwater Co. for the annual supply of water and sewer maintenance parts and supplies, in accordance with all contract documents attached hereto and made a part hereof for all purposes. Funds for this purchase are being committed out of the City of Sherman's fiscal year 2023-2024 budget.

SECTION 2. That it is hereby officially found and determined that the meeting at which this resolution is passed is open to the public and that public notice of the time, place, and purpose of said meeting was given as required by law.

DULY PASSED AND APPROVED BY THE CITY COUNCIL OF THE CITY OF SHERMAN, TEXAS, on this the 15th day of April 2024.

CITY OF SHERMAN, TEXAS

ATTEST:

BY: _____ **BY:** _____
LINDA ASHBY, CITY CLERK **DAVID PLYLER, MAYOR**

APPROVED AS TO FORM AND CONTENT:
THE LAW FIRM OF ABERNATHY, ROEDER, BOYD & HULLETT, P.C.

BY: _____
RYAN PITTMAN, CITY ATTORNEY

AGREEMENT FOR WATER AND SEWER MAINTENANCE PARTS AND SUPPLIES

The **City of Sherman, Texas**, a home-rule municipality ("City"), and NORTH TEXAS WINWATER, a DELAWARE CORPORATION ("Contractor"), hereby enter into this Agreement for water and sewer maintenance parts and supplies ("Agreement"). City and Contractor are sometimes referred to collectively as the "parties" or individually as a "party."

WHEREAS, City issued a Request for Proposal, attached hereto as Exhibit A and incorporated herein for all purposes ("Bid Request"), seeking competitive sealed bids for water and sewer maintenance parts and supplies for the City; and

WHEREAS, Contractor timely submitted a sealed response to the Bid Request, attached hereto as Exhibit B and incorporated herein for all purposes ("Submittal"), seeking to provide such services for City; and

WHEREAS, based on Contractor's representations in response to the Bid Request, including those representations set forth in the Submittal, City has selected Contractor to provide the services sought in the Bid Request under the terms and conditions of this Agreement ("Project").

NOW, THEREFORE, in consideration of the mutual agreements and covenants contained herein and other good and valuable consideration, the receipt and sufficiency of which are hereby acknowledged, the parties agree as follows:

1. Scope of Services.
Contractor shall provide the services and deliverables that are described in the Agreement Documents (as defined below) and shall furnish all personnel, labor, equipment, supplies and all other items necessary to provide the services and deliverables as specified by the terms and conditions of the Agreement Documents (collectively, "Services").

2. Term.
The initial term of the Agreement shall be for a period of one (1) year, commencing on the Effective Date (hereinafter defined) of this Agreement ("Initial Term"). City shall have the option to extend this Agreement for four (4) additional terms of one (1) year each (each a "Renewal Term") on the same terms and conditions of this Agreement by giving Contractor written notice of its intent to extend prior to the expiration of the then-current one (1) year term.

3. Compensation.
In exchange for Contractor's performance of the Services in accordance with the Agreement Document, City agrees to pay Contractor on the basis defined by and in the amounts set forth in the Submittal ("Contractor's Fee").

City shall pay Contractor within thirty (30) days of receipt of each invoice, unless supporting receipts or other supporting documentation have been requested by City, in which case City shall pay the invoice as soon after receiving the supporting receipts or

documentation as is reasonable; or unless a dispute arises as to any charge(s) contained in the invoice, in which case City shall pay the undisputed amount of the invoice within thirty (30) days of receipt and shall pay the remaining amount, if any, of the invoice after resolution of the dispute as soon after resolution as is reasonable. Notwithstanding anything to the contrary in the Agreement Documents, City shall not be required to pay any invoice submitted by Contractor if Contractor is in breach of this Agreement.

The parties agree that the continuation of this Agreement after the close of any given fiscal year of City, which closes on September 30th of each calendar year, shall be subject to City Council approval. In the event that the City Council does not approve the appropriation of funds for this Agreement, the Agreement shall terminate at the end of the fiscal year for which funds were appropriated, and the parties shall have no further obligations hereunder, except that City shall be obligated to pay monies owed Contractor for services it has provided pursuant to this Agreement through the end of that fiscal year provided that Contractor is not in breach of this Agreement.

4. Agreement Documents.

The "Agreement Documents," as that term is used herein, shall mean and include the following documents, and this Agreement expressly incorporates the same herein by reference for all purposes:

A. This Agreement;

B. The Bid Request, attached hereto as Exhibit A;

C. The Submittal, attached hereto as Exhibit B;

D. City's Insurance Requirements, attached hereto as Exhibit C;

E. Affidavit of No Prohibited Interested, attached hereto as Exhibit D; and

F. Conflict of Interest Questionnaire, attached hereto as Exhibit E.

This Agreement shall incorporate the terms of the Agreement Documents in their entirety. To the extent that Exhibit A, Exhibit B, Exhibit C, Exhibit D or Exhibit E are in conflict with provisions of this Agreement or each other, the provisions of this Agreement, then the provisions of Exhibit A, Exhibit C, Exhibit D, Exhibit E and Exhibit B shall prevail in that order. Should disputes arise as to responsibilities and obligations set forth in the Agreement Documents, City's interpretation and/or decision shall be final and binding.

5. Entire Agreement.

The Agreement Documents contain all representations, understandings, contracts and agreements between the parties regarding the subject matter of this Agreement. The Agreement Documents supersede all oral or written previous and contemporaneous agreements, writings, understandings, representations or contracts between the parties regarding the subject matter of this Agreement. This Agreement in no way modifies or

supersedes any document executed by the parties prior to the Effective Date of this Agreement which does not concern the subject matter of this Agreement. No amendment to the Agreement Documents shall be made except on the written agreement of the parties, which shall not be construed to release either party from any obligation of the Agreement Documents except as specifically provided for in such amendment.

6. Required Insurance.

Contractor shall not start work under this Agreement until Contractor has obtained, at Contractor's expense, all of the insurance specified in, and required by, the Agreement Documents. Contractor shall procure and keep in full force and effect the types and amounts of insurance specified in City's Insurance Requirements, attached hereto as Exhibit C and incorporated herein for all purposes, for and during all aspects and phases of Contractor's work throughout the term of this Agreement at no expense to City. Contractor also shall comply with all other requirements set forth in Exhibit C.

7. No Prohibited Interest; Vendor Disclosure.

Contractor acknowledges and agrees that it is aware of, and will abide by, the no prohibited interest requirement of the City Charter. Contractor shall execute and deliver to City the Affidavit of No Prohibited Interest, attached hereto as Exhibit D and incorporated herein for all purposes, no later than the Effective Date of this Agreement (hereinafter defined). Contractor acknowledges and agrees that the existence of a prohibited interest during the term of this Agreement will render this Agreement voidable. Contractor further acknowledges and agrees that it also is aware of, and will abide by, the vendor disclosure requirements set forth in Chapter 176 of the Texas Local Government Code, as amended. In this connection, Contractor shall execute and deliver to City the Conflict of Interest Questionnaire, Form CIQ, attached hereto as Exhibit E and incorporated herein for all purposes, no later than the Effective Date of this Agreement.

8. Indemnity.

CONTRACTOR HEREBY RELEASES AND SHALL DEFEND, INDEMNIFY AND HOLD HARMLESS CITY AND ITS CITY COUNCIL MEMBERS, OFFICERS, AGENTS, REPRESENTATIVES AND EMPLOYEES (COLLECTIVELY REFERRED TO AS "CITY" FOR PURPOSES OF THIS SECTION) FROM AND AGAINST ALL DAMAGES, INJURIES (WHETHER IN CONTRACT OR IN TORT, INCLUDING PERSONAL INJURY AND DEATH), CLAIMS, PROPERTY DAMAGES (INCLUDING LOSS OF USE), LOSSES, DEMANDS, SUITS, ACTIONS, JUDGMENTS, LIENS, COSTS AND EXPENSES, INCLUDING REASONABLE ATTORNEY'S FEES AND EXPENSES (INCLUDING ATTORNEY'S FEES AND EXPENSES INCURRED IN ENFORCING THIS SECTION), THAT IN WHOLE OR IN PART ARISE OUT OF OR ARE CONNECTED WITH GOODS AND/OR SERVICES PROVIDED BY CONTRACTOR, ITS OFFICERS, AGENTS, REPRESENTATIVES, EMPLOYEES, SUBCONTRACTORS, LICENSEES, INVITEES OR ANY OTHER THIRD PARTIES FOR WHOM CONTRACTOR IS LEGALLY RESPONSIBLE (COLLECTIVELY REFERRED TO AS "CONTRACTOR" FOR PURPOSES OF THIS SECTION) PURSUANT TO THIS AGREEMENT AND/OR THE NEGLIGENT, GROSSLY NEGLIGENT AND/OR INTENTIONAL WRONGFUL ACT AND/OR OMISSION OF CONTRACTOR IN ITS/THEIR PERFORMANCE OF THIS AGREEMENT, REGARDLESS OF THE JOINT OR CONCURRENT NEGLIGENCE OF CITY (COLLECTIVELY, "CLAIMS"). THIS INDEMNIFICATION PROVISION AND THE USE OF THE TERM "CLAIMS" IS ALSO SPECIFICALLY INTENDED TO APPLY TO, BUT IS NOT LIMITED TO, ANY AND ALL CLAIMS, WHETHER CIVIL OR CRIMINAL, BROUGHT AGAINST CITY BY ANY GOVERNMENT AUTHORITY OR AGENCY RELATED TO ANY PERSON PROVIDING SERVICES UNDER THIS

AGREEMENT THAT ARE BASED ON ANY FEDERAL IMMIGRATION LAW AND ANY AND ALL CLAIMS, DEMANDS, DAMAGES, ACTIONS AND CAUSES OF ACTION OF EVERY KIND AND NATURE, KNOWN AND UNKNOWN, EXISTING OR CLAIMED TO EXIST, RELATING TO OR ARISING OUT OF ANY EMPLOYMENT RELATIONSHIP BETWEEN CONTRACTOR AND ITS EMPLOYEES OR SUBCONTRACTORS AS A RESULT OF THAT SUBCONTRACTOR'S OR EMPLOYEE'S EMPLOYMENT AND/OR SEPARATION FROM EMPLOYMENT WITH CONTRACTOR, INCLUDING BUT NOT LIMITED TO ANY DISCRIMINATION CLAIM BASED ON SEX, SEXUAL ORIENTATION OR PREFERENCE, RACE, RELIGION, COLOR, NATIONAL ORIGIN, AGE OR DISABILITY UNDER FEDERAL, STATE OR LOCAL LAW, RULE OR REGULATION, AND/OR ANY CLAIM FOR WRONGFUL TERMINATION, BACK PAY, FUTURE WAGE LOSS, OVERTIME PAY, EMPLOYEE BENEFITS, INJURY SUBJECT TO RELIEF UNDER THE WORKERS' COMPENSATION ACT OR WOULD BE SUBJECT TO RELIEF UNDER ANY POLICY FOR WORKERS COMPENSATION INSURANCE, AND ANY OTHER CLAIM, WHETHER IN TORT, CONTRACT OR OTHERWISE.

IN ITS SOLE DISCRETION, CITY SHALL HAVE THE RIGHT TO APPROVE OR SELECT DEFENSE COUNSEL TO BE RETAINED BY CONTRACTOR IN FULFILLING ITS OBLIGATION HEREUNDER TO DEFEND AND INDEMNIFY CITY, UNLESS SUCH RIGHT IS EXPRESSLY WAIVED BY CITY IN WRITING. CITY RESERVES THE RIGHT TO PROVIDE A PORTION OR ALL OF ITS OWN DEFENSE; HOWEVER, CITY IS UNDER NO OBLIGATION TO DO SO. ANY SUCH ACTION BY CITY IS NOT TO BE CONSTRUED AS A WAIVER OF CONTRACTOR'S OBLIGATION TO DEFEND CITY OR AS A WAIVER OF CONTRACTOR'S OBLIGATION TO INDEMNIFY CITY PURSUANT TO THIS AGREEMENT. CONTRACTOR SHALL RETAIN CITY-APPROVED DEFENSE COUNSEL WITHIN SEVEN (7) BUSINESS DAYS OF CITY'S WRITTEN NOTICE THAT CITY IS INVOKING ITS RIGHT TO DEFENSE OR INDEMNIFICATION UNDER THIS AGREEMENT. IF CONTRACTOR FAILS TO RETAIN COUNSEL WITHIN SUCH TIME PERIOD, CITY SHALL HAVE THE RIGHT TO RETAIN DEFENSE COUNSEL ON ITS OWN BEHALF, AND CONTRACTOR SHALL BE LIABLE FOR ALL COSTS INCURRED BY CITY.

THE RIGHTS AND OBLIGATIONS CREATED BY THIS SECTION SHALL SURVIVE TERMINATION OF THIS AGREEMENT.

9. Liability.

To the fullest extent permitted by law, Contractor shall be fully and solely responsible and liable for its own acts and omissions, including those of its officers, agents, representatives, employees, subcontractors, licensees, invitees and all other parties performing services for or on behalf of Contractor under this Agreement, and for any and all damage to Contractor's equipment and other property. City assumes no such responsibility or liability. City shall have no such responsibility or liability to either Contractor or its officers, agents, representatives, employees, subcontractors, licensees, invitees or other persons.

10. Compliance with Laws; Standard of Care.

Contractor shall comply with all federal, state and local laws, statutes, ordinances, regulations and policies, as they exist, may be amended or in the future arising, applicable to Contractor and its work. Contractor shall ensure that its officers, agents, representatives, employees, subcontractors, licensees, invitees and other parties performing services for or on behalf of Contractor under this Agreement comply with all applicable laws, statutes, ordinances, regulations and policies. If Contractor observes or is notified that the work under this Agreement is at variance with applicable laws, statutes, ordinances, regulations

and policies, Contractor shall immediately notify City in writing. Contractor shall perform the Services in accordance with the prevailing standard of care by exercising the skill and care ordinarily utilized by professionals performing the same or similar services under the same or similar circumstances in the State of Texas.

11. Termination.

City is entitled to terminate this Agreement at any time for any reason or for no reason by giving Contractor at least thirty (30) days' prior written notice of the termination date.

City is entitled to terminate this Agreement immediately on breach of any term or provision of the Agreement Documents by Contractor. If at any time during the term of this Agreement, Contractor shall fail to commence the work in accordance with the provisions of the Agreement Documents or fail to diligently perform the Services in an efficient, timely and careful manner and in strict accordance with the provisions of the Agreement Documents, then City shall have the right to terminate this Agreement and complete the work in any manner it deems desirable, including engaging the services of other parties, if Contractor does not cure any such default after five (5) days written notice thereof. Any such act by City shall not be deemed a waiver of any other right or remedy of City.

If after exercising any remedy provided herein, the cost to City of the performance of the balance of the work under this Agreement is in excess of that part of the Contractor's Fee which has not yet been paid to Contractor hereunder, Contractor shall be liable for and shall reimburse City for such excess, without waiver of any other right or remedy of City.

The rights and remedies provided by this Agreement are cumulative, and the use of any one right or remedy by either party shall not preclude or waive its rights to use any or all other remedies. These rights and remedies are given in addition to any other rights the parties may have by law, statute, ordinance or otherwise.

12. Authority to Execute.

Each party represents and warrants to the other that it has the full power and authority to enter into and fulfill the obligations of this Agreement. The respective signatories to this Agreement, by affixing their signatures hereto, warrant and represent that they have the authority to bind their respective parties as duly authorized representatives thereof.

13. Assignment.

Contractor agrees that neither this Agreement nor the work to be performed hereunder will be assigned or sublet without the prior written consent of City. Contractor further agrees that the assignment or subletting of any portion or feature of the work or materials required in the performance of this Agreement shall not relieve Contractor of its full obligations to City as provided by this Agreement. All such approved work performed by assignment or subletting shall be billed through Contractor, and there shall be no third-party billing.

14. No Waiver of Immunity.

The parties acknowledge and agree that, in executing and performing this Agreement, City has not waived, nor shall be deemed to have waived, any defense or immunity, including governmental, sovereign and official immunity, that would otherwise be available to it against claims arising in the exercise of governmental powers and functions. By entering into this Agreement, the parties do not create any obligations, express or implied, other than those set forth herein.

15. Savings/Severability.
In the event that a term, condition or provision of this Agreement is determined to be invalid, illegal, void, unenforceable or unlawful by a court of competent jurisdiction, then that term, condition or provision shall be deleted and the remainder of the Agreement shall remain in full force and effect as if such invalid, illegal, void, unenforceable or unlawful provision had never been included in this Agreement.

16. Consideration.
This Agreement is executed by the parties without coercion or duress and for substantial consideration, the sufficiency of which is forever confessed.

17. Attorneys' Fees.
If either party files any action or brings any proceeding against the other arising from this Agreement, then as between City and Contractor, the prevailing party shall be entitled to recover as an element of its costs of suit, and not as damages, reasonable and necessary attorneys' fees and litigation expenses both at trial and on appeal, subject to the limitations set forth in the TEX. LOC. GOV'T CODE § 271.153, as it exists or may be amended, if applicable.

18. Governing Law; Venue.
The laws of the State of Texas shall govern the interpretation, validity, performance and enforcement of this Agreement, without regard to conflict of law principles. This Agreement is performable in Grayson County, Texas, and the exclusive venue for any action arising out of this Agreement shall be a court of appropriate jurisdiction in Grayson County, Texas.

19. Binding Effect.
This Agreement shall be binding on and inure to the benefit of the parties and their respective heirs, executors, administrators, legal representatives, successors and assigns when permitted by this Agreement.

20. No Waiver.
Waiver by either party of any breach of this Agreement, or the failure of either party to enforce any of the provisions of this Agreement, at any time, shall not in any way affect, limit, or waive such party's right thereafter to enforce and compel strict compliance.

21. Headings.
The headings of the various sections of this Agreement are included solely for convenience of reference and are not to be full or accurate descriptions of the content thereof.

22. Indemnity.
The parties agree that the indemnity provision set forth in Section 8 herein is conspicuous and the parties have read and understood the same.

23. Notice.
Any notice provided or permitted to be given under this Agreement must be in writing and may be served by depositing the same in the United States Mail, addressed to the party to be notified, postage pre-paid and registered or certified with return receipt requested; by facsimile; by electronic mail, with documentation evidencing the addressee's receipt thereof; or by delivering the same in person to such party a via hand-delivery service, or to any courier service that provides a return receipt showing the date of actual delivery of the same to the addressee thereof. Notice given in accordance herewith shall be effective on receipt at the address of the addressee. For purposes of notification, the addresses of the parties shall be as follows:

If to Contractor, to: North Texas Winwater Co.
Attn: Zac Hansen, President
Address: 1010 Industrial Way Dr.
Anna, TX 75409
Telephone: 469-425-4402
Facsimile:
Email: zthansen@winwaterworks.com

If to City, to: City of Sherman
Attn: Robby Hefton, City Manager
220 W. Mulberry Street
Sherman, Texas 75090
Telephone: (903) 892-7201
Facsimile: (903) 892-7355
Email: robbyh@cityofsherman.com

With a copy to:
Abernathy, Roeder, Boyd & Hullett, P.C.
Attn.: Ryan D. Pittman
1700 Redbud Blvd., Suite 300
McKinney, Texas 75069
Telephone: (214) 544-4000
Facsimile: (214) 544-4054
Email: rpittman@abernathy-law.com

24. Representations.
Each party states that they have carefully read this Agreement, know the contents hereof, have consulted with an attorney of their choice regarding the meaning and effect hereof and is signing the same solely of their own judgment.

25. Independent Contractor.
Contractor covenants and agrees that Contractor is an independent contractor and not an officer, agent, servant or employee of City; that Contractor shall have exclusive control of and exclusive right to control the details of the work performed hereunder and all persons performing the same; that the doctrine of respondent superior shall not apply as between City and Contractor, its officers, agents, employees, contractors, subcontractors and consultants; and that nothing herein shall be construed as creating a partnership or joint enterprise between City and Contractor.

26. Incorporation of Recitals.
The representations, covenants and recitations set forth in the foregoing recitals of this Agreement are true and correct and are hereby incorporated into the body of this Agreement and adopted as findings of City and the authorized representative of Contractor.

27. Reference to Contractor.
When referring to "Contractor" herein, this Agreement shall refer to and be binding upon Contractor, and its officers, directors, partners, employees, representatives, contractors, subcontractors, licensees, invitees, agents, successors, assignees (as authorized herein), vendors, grantees, trustees, legal representatives and/or any other third parties for whom Contractor is legally responsible.

28. Reference to City.
When referring to "City" herein, this Agreement shall refer to and be binding upon City, its Council Members, officers, agents, representatives, employees and/or any other authorized third parties for whom City is legally responsible.

29. Miscellaneous Drafting Provisions.
This Agreement shall be deemed drafted equally by all parties hereto. The language of all parts of this Agreement shall be construed as a whole according to its fair meaning, and any presumption or principle that the language herein is to be construed against any party shall not apply. Headings in this Agreement are for the convenience of the parties and are not intended to be used in construing this document.

30. Multiple Counterparts.
This Agreement may be executed in a number of identical counterparts, each of which shall be deemed an original for all purposes. An electronic mail and/or facsimile signature will also be deemed to constitute an original if properly executed and delivered to the other party.

IN WITNESS WHEREOF, the parties have executed this Agreement and caused this Agreement to be effective when all the parties have signed it. The date this Agreement is signed by the last party to sign it (as indicated by the date associated with that party's signature below) will be deemed the effective date of this Agreement ("Effective Date").

CITY OF SHERMAN, TEXAS,
a home-rule municipality

By: _____
Robby Hefton, City Manager
Date: _____

ATTEST:

_____
Linda Ashby, City Clerk

_____
a Texas corporation

By: _____
Printed Name: ZAC HANSEN
Title: PRESIDENT
Date: 4/12/2024

STATE OF TEXAS §
§
COUNTY OF GRAYSON §

BEFORE ME, the undersigned authority, on this day personally appeared **Robby Hefton**, known to me to be one of the persons whose names are subscribed to the foregoing instrument; he acknowledged to me he is the City Manager and duly authorized representative for the **City of Sherman, Texas** and he executed said instrument for the purposes and consideration therein expressed.

GIVEN UNDER MY HAND AND SEAL OF OFFICE this _____ day of _____, 202_.

_____
Notary Public in and for the State of Texas
My Commission Expires:_____

STATE OF TEXAS §
§
COUNTY OF Collin §

BEFORE ME, the undersigned authority, on this day personally appeared Zac Hansen known to me to be one of the persons whose names are subscribed to the foregoing instrument; he/she acknowledged to me he/she is the President (title) and duly authorized representative for North Texas Wwwater, a Texas corporation, and that he/she executed said instrument for the purposes and consideration therein expressed.

GIVEN UNDER MY HAND AND SEAL OF OFFICE this 4th day of April, 2024.

DOUGLAS JOSEPH IMIG
Notary ID #133769395
My Commission Expires
May 18, 2026

Doug Imig
Notary Public in and for the State of Texas
My Commission Expires: May 18, 2026

Exhibit A
Bid Request

City of Sherman
PO Box 1106
Sherman, TX 75091-1106

Request for Proposals

for

WATER & SEWER PARTS AND SUPPLIES RFP No. 2024-10

Publication Dates: **Sunday March 10, 2024**
Sunday March 17, 2024

TABLE OF CONTENTS

Document	Page #
Instructions to Bidders	3
Notice to Bidders	4
General Conditions	6
Specifications	12
• Evaluation Process	13
Contact Reference	17
Exhibit C: City's Insurance Requirements	18
Exhibit D: Affidavit of No Prohibited Interest	20
Exhibit E: Conflict of Interest Questionnaire	21
Texas Ethics Commission Form 1295 & Verification 2290	22

CITY OF SHERMAN, TEXAS

FINANCE DEPARTMENT

REQUEST FOR PROPOSAL - BID NO. 2024-10; **Water & Sewer Parts and Supplies**

The enclosed **REQUEST FOR PROPOSAL** (RFP) and accompanying **SPECIFICATIONS** are for your convenience in bidding the enclosed referenced **Water & Sewer Parts and Supplies** for the City of Sherman.

Questions may be addressed to the Finance Department at the address listed below. The bids will be opened at **3:00 p.m. on Thursday, March 28, 2024,** at the following address:

City of Sherman – Finance Department
Municipal Building
405 N. Rusk Street
Sherman, TX
903-892-7215
craigl@cityofsherman.com

Bids may be submitted by mail to the following address:

City of Sherman
Finance Dept. – RFP for Water & Sewer Parts and Supplies - No. 2024-10

P.O. Box 1106
Sherman, TX 75091-1106

OR

Electronically at www.publicpurchase.com

OR

By delivery at the Municipal Building address listed above.

NOTICE TO BIDDERS

Bids will be received by the City of Sherman, Sherman, Texas, at the Finance Department, Attention: Craig Long, Sherman Municipal Building, 405 N. Rusk, Sherman, Texas 75091 until the hour **3:00 PM on the 28th day of March, 2024,** at which time bids duly delivered and submitted will be considered for supplying the following:

BID NO. 2024-10 – Water & Sewer Parts and Supplies

The award is intended to be included on the agenda of a regularly scheduled meeting of the City Council at the following address:

City Council Chambers
City Hall
220 W. Mulberry
Sherman, TX

Each bid delivered to the City shall be sealed and clearly marked "Water & Sewer Parts and Supplies 2024-10" on the exterior of the bid. Electronic submittals may only be made through Public Purchase at https://www.publicpurchase.com. No email or faxed bids will be accepted. Each bid shall be **manually signed and dated by a person having the authority to bind the firm in a contract. Bids that are not signed and dated will be rejected.**

Please note that all bids **must be received at the designated location or through Public Purchase by the deadline shown**. Bids received after the deadline will not be considered for the award of the contract, and shall be considered void and unacceptable. The Opening is scheduled for **3:00 p.m., Thursday, March 28, 2024,** at which time the sealed bids will be opened.

Any bid received after stated closing time will be returned unopened. If bids are sent by mail to the Finance Department, the bidder shall be responsible for actual delivery of the bid before the advertised date and hour for opening of bids. If the mail is delayed by the postal service, courier service, or an ISP (Internet Service Provider), beyond the date and hour set for the bid opening, bids thus delayed will not be considered.

The City of Sherman will receive sealed bids for: **Water & Sewer Parts and Supplies.**

Bidders should carefully examine all terms, conditions, specifications and related documents. Should a bidder find discrepancies in or omissions from the specifications or related documents, or should there be doubt as to their meaning, the City of Sherman Finance Department should be notified immediately for clarification prior to submitting the bid. In the event of any conflict between the terms and conditions of these requirements and the specifications, the specifications shall govern. In the event of any conflict of interpretation of any part of this overall document, the City of Sherman's interpretation shall govern.

Information concerning the bid specifications or bid process/procedures may be submitted in writing to Craig Long, Budget Analyst at craigl@cityofsherman.com, or via phone at (903) 892-7215.

Until the final awarding by the City of Sherman, said City reserves the right to reject any and/or all bids, to waive technicalities, to re-advertise, and proceed otherwise when the best interests of said City will be realized hereby.

[Rest of Page Intentionally Left Blank]

CITY OF SHERMAN
GENERAL CONDITIONS

ADDENDA

It is the responsibility of the vendor to check for addenda. Addenda will be posted to: www.ci.sherman.tx.us and to www.publicpurchase.com.

ANNUAL CONTRACT FUNDING

The city operates on a fiscal year that ends on September 30th. Because state law mandates that a municipality may not commit funds beyond a fiscal year, this bid is subject to cancellation if funds for this commodity are not approved in the next fiscal year.

ASSIGNMENT OF BID/CONTRACT

The successful bidder may not assign their rights and duties under and award without the written consent of the City. Such consent shall not relieve the assignor of liability in event of default by their assignee.

BID CONSIDERATION / TABULATION

Until final award of the Contract, the city reserves the right to reject any or all bids, to waive technicalities, and to re-advertise for new bids, or proposed to do the work otherwise in the best interests of the City. Please refer to the **EVALUATION PROCESS & BEST VALUE EVALUATION CRITERIA** sections for additional information .

BID SUBMISSION

Bids may be submitted in person, by mail, or electronically at www.publicpurchase.com.

- Submit bids via mail to PO Box 1106, Sherman, TX 75091-1106.
- To submit a bid via mail, all documents must be returned and an original signature provided on the proposal to bidders sheet.
- Bids will not be accepted without a signature.
- Bids submitted by email or fax will not be accepted.
- The City is not responsible for mail service. See page 4, paragraph 2 of the Notice to Bidders.

BRAND NAMES

If items for which bids have been called for have been identified by a "brand name or equal" description, such identification is intended to be descriptive, but not restrictive, and is to indicate the quality and characteristics of products that will be satisfactory. Bids offering "equal" products will be considered for award if such products are clearly identified in the bids and are determined by the City to be equal in all material respects to the brand name products referenced. **Unless the bidder clearly indicates in their bid that they are offering an "equal product", their bid shall be considered as offering a brand name product referenced in the Proposal Schedule.**

CHANGES OR ALTERATIONS

No part of this bid may be changed/altered in any way. Vendors must submit written requests to change any specifications/conditions with their proposal. ***Changes made without submission of a written request to this bid will result in disqualification.***

COMPLETING INFORMATION

Bidder must fill in all information asked for in the blanks provided under each item. Failure to comply may result in rejection of the Bid at the City's option.

CONTRACT CLAUSE

All bidders understand and agree that the vendor's bid response will become a legally binding contract upon acceptance in writing by the City. This contract may be superseded only if replaced with a more extensive contract that is agreed to by both parties.

DEFAULT

In case of default of the successful bidder, the city of Sherman may procure the articles from other sources and hold the bidder responsible for any excess cost occasioned thereby.

DELIVERY

The City reserves the right to demand bond or penalty to guarantee delivery by the date indicated. If order is given and the Bidder fails to furnish the materials by the guaranteed date, the City reserves the right to cancel the order without liability on its part. All prices are to be F.O.B. Sherman, Texas all freight prepaid.

DELIVERY DATE

Delivery date is an important factor to the City and may be required to be a part of each bid. The city of Sherman considers delivery time to be that period elapsing from the time the individual order is placed until that order or work thereunder is received by the City at the specified delivery location. The delivery date indicates a guaranteed delivery at Sherman, Texas. Failure of the bidder to meet guaranteed delivery dates or service performance could affect future City orders.

Whenever the Contractor encounters any difficulty which is delaying or threatens to delay timely performance (including actual or potential labor disputes), the Contractor shall immediately give notice thereof in writing to the City, stating all relevant information with respect thereto. Such notice shall not in any way constitute a basis for an extension of the delivery or performance schedule or be construed as a waiver by the City of any rights or remedies to which it is entitled by law or pursuant to provisions herein. Failure to give such notice, however, may be grounds for denial of any request for an extension of the delivery or performance schedule because of such delivery.

INDEMNIFICATION

In case any action in court is brought against the Owner, or any officer or agent of the Owner, for the failure, omission, or neglect of the vendor to perform any of the covenants, acts, matters, or things by this contract undertaken; or for injury or damage caused by the alleged negligence of the

vendor or his subcontractors or his or their agents, or in connection with any claim based on lawful demands of subcontractors, workmen, materialmen, or suppliers the vendor shall indemnify and

save harmless the Owner and his officers and agents, from all losses, damages, costs, expenses, judgments, or decrees arising out of such action.

INSURANCE

Deductibles, of any type, are the responsibility of the vendor/contractor.

MISCELLANEOUS

Except as to any supplies or components which the specifications provide need not be new, all supplies and components to be provided under this contract shall be new (not used or reconditioned, and not of such age or so deteriorated as to impair their usefulness or safety), of current production and of the most suitable grade for the purpose intended. If at any time during the performance of this contract the Contractor believes that the furnishing of supplies or components which are not new is necessary or desirable, they shall notify the City immediately, in writing, including the reasons therefore and proposing any consideration which will flow to the City if authorization to use supplies or components is granted.

The city of Sherman supports a recycling program. Recycled materials are acceptable and will be considered for award. The City desires to use recycled products when a comparable material/product is available. If your company distributes products made of recycled materials please submit an alternate bid for the items requested. All recycled products should meet the minimum standards established in the bid specifications provided. State any exceptions: costs, warranties and percentage of recycle materials used in the manufacture of the material/product. The City will determine the acceptability of the materials/product bid as an alternate.

Successful bidder(s) agrees to extend prices to all entities that have entered into or will enter into joint purchasing inter-local cooperation agreements with the city of Sherman. As such, the city of Sherman has executed an inter-local agreement with certain other governmental entities authorizing participation in a cooperative purchasing program. The successful vendor may be asked to provide product/services, based upon the bid price, to any other participant in the forum.

The City operates on a fiscal year that ends on September 30th. State law mandates that a municipality may not commit funds beyond a fiscal year; this bid is subject to cancellation if funds for this commodity are not approved in the next fiscal year.

PAYMENT TERMS & CONDITIONS

All bids shall specify terms and conditions of payment, which will be considered as part of, but not control, the award of bid. City review, inspection, and processing procedures ordinarily require thirty (30) days after receipt of invoice, materials or service. Bids which call for payment before 30 days from receipt of invoice, or cash discounts given on such payment, will be considered only if in the opinion of the City the review, inspection and processing procedures can be completed as to the specific purchases within the specified time.

It is the intention of the city of Sherman to make payment on completed orders within thirty (30) days

of receiving invoicing unless unusual circumstances arise. Invoices shall be fully documented as to labor, materials and equipment provided.

PROVISIONAL CLAUSES

The city of Sherman will not enter into any contract where the cost is provisional upon such clauses as are known as “escalator” or “cost-plus” clauses.

REJECTION OF BIDS

The City reserves the right to reject any or all bids or to waive technicalities at its option when in the best interests of said City. Bids will be considered irregular if they show any omissions, alteration of form, additions, or conditions not called for, unauthorized alternate bids or irregularities of any kind. However, the City reserves the right to waive any irregularities and to make the award in the best interests of the City.

The City reserves the right to reject any or all bids, and all bids submitted are subject to this reservation. Bids may be rejected, among other reasons, for any of the following specific reasons:

- Bids received after the time limit for receiving bids as stated in the advertisement.
- Proposal containing any irregularities.
- Bids submitted via fax or email.
- Unbalanced value of any items.

Bidders may be disqualified and their bids not considered, among other reasons, for any of the following specific reasons:

- Reason for believing collusion exists among the Bidders.
- Reasonable grounds for believing that any Bidder is interested in more than one Proposal for the work contemplated.
- The Bidder being interested in any litigation against the City.
- The Bidder being in arrears on any existing contract or having defaulted on a previous contract.
- Lack of competency as revealed by a financial statement, experience and equipment, questionnaires, etc.
- Uncompleted work, which in the judgment of the City will prevent or hinder the prompt completion of additional work if awarded.

REQUEST FOR NON-CONSIDERATION

Bids deposited with the City cannot be withdrawn prior to the time set for opening bids. Request for non-consideration of bids must be made in writing to the Finance Department and received by the City prior to the time set for opening bids. After other bids are opened and publicly read, the Proposal for which non-consideration is properly requested may be returned unopened. The Proposal may not be withdrawn after the bids have been opened, and the Bidder, in submitting the same, warrants and guarantees that this bid has been carefully reviewed and checked and that it is in all things true and accurate and free of mistakes and that such bid will not and cannot be withdrawn because of any mistake committed by the Bidder.

SALES TAX

The total for each bid submitted must include any applicable taxes. Although the City is exempt from most City, State, or Federal taxes, this is not true in all cases. It is suggested that taxes, if any, be separately identified, itemized, and stated on each bid. The City cannot determine for the bidder whether or not the bid is taxable to the City. The bidder through the bidder's attorney or tax consultant must make such determination. Bills submitted for taxes after the bids are awarded will not be honored.

PROPOSAL DEFINITIONS:

"City" is the City of Sherman, Texas.
"Bidder" is an individual or business submitting a bid or proposal to the City of Sherman.
"Independent contractor" or "contractor" is one who contracts to perform work or furnish materials in accordance with a contract.

I. PROPOSAL TERMS

A. The City of Sherman reserves the right to reject any and all proposals received as a result of this RFP. If a proposal is selected, it will be the most advantageous regarding price, quality of service, the independent contractor's qualifications and capabilities to provide the specified service, and other factors which the City of Sherman may consider. The City does not intend to award a contract fully on the basis of any response made to the proposal: the City reserves the right to consider proposals for modifications at any time before a contract would be awarded; and negotiations would be undertaken with the independent contractor whose proposal is deemed to best meet the City's specifications and needs.

B. Proposals must be signed by an official authorized to bind the independent contractor to its provisions for a period of at least ninety (90) days. Failure of the successful bidder to accept the obligation of the contract may result in the cancellation of any award.

C. In the event it becomes necessary to revise any part of the RFP, addenda will be provided. The deadline for submission of proposals may be adjusted to allow for revisions. To be considered, the entire proposal document, with any amendments, should be returned by the specified date, time and method identified on page 2 of this document.

D. Proposals should be prepared simply and economically providing a straightforward, concise description of the independent contractor's ability to meet the requirements of the RFP. Proposals shall be written in ink or typewritten. No erasures are permitted. Mistakes may be crossed out and corrected and must be initialed in ink by the person signing the proposal.

E. The price quotations from the contractor stated in this proposal will not be subject to any price increase from the closing date of this RFP to the mutually agreed to date of contract.

F. The City of Sherman reserves the right to increase or decrease the amount of janitorial services based upon annual budget constraints with fifteen (15) days' notice.

G. The City of Sherman reserves the right to award a separate contract to separate vendors for each item/group or to award one contract for the entire RFP.

[REST OF THIS PAGE INTENTIONALLY LEFT BLANK

Specifications

Resilient Seat Wedge Gate Valves

1. Valve shall conform to **AWWA C509-87**, Standard for resilient Seated Gate Valves.

2. Wedge shall be constructed of cast or ductile iron, fully encapsulated in synthetic rubber.

3. Wedge rubber shall be molded in place and bonded to the iron portion, and shall not be mechanically attached with screws, rivets, or similar fasteners.

4. Wedge shall seat against seating surface arranged symmetrically about the center line of the operation stem, so that seating is equally effective regardless of the direction of pressure unbalance across the wedge.

5. All seating surfaces in the body shall be inclined to be vertical at a minimum angle of 32 degrees (when stem is in a vertical position) to eliminate abrasive wear of rubber sealing surfaces.

6. Stem shall be sealed by at least two O-rings; all stem seals shall be replaceable with valve fully open and wile subject to full rated pressure.

7. Waterway shall be smooth and shall have no depressions or cavities in seat area where foreign material can be lodged and prevent closure or sealing.

8. Valve body and bonnet shall be epoxy coated, inside and out, with fusion bonded epoxy. Coating shall conform to AWWA C550-90, Standard for Protective Interior Coatings for Valves and Hydrants.

9. Gate valves shall be **Mueller A2360, AFC 500, AVK 25/00, or M & H style 7000.**

FLANGED X M.J. GATE VALVE			
SIZE	ESTIMATED USAGE	UNIT PRICE	EXTENDED PRICE
2"	6		
4"	15		
6"	25		
8"	15		
10"	2		
12"	4		
14"	1		
16"	1		
18"	1		
20"	1		
24"	1		
TOTAL			

	M.J. GATE VALVES			
SIZE	SIZE	ESTIMATED USAGE	UNIT PRICE	EXTENDED PRICE
2"	2"	20		
4"	4"	20		
6"	6"	50		
8"	8"	10		
10"	10"	10		
12"	12"	10		
14"	14"	1		
16"	16"	1		
18"	18"	1		
20"	20"	1		
24"	24"	1		
	TOTAL			

FLANGED X FLANGE GATE VALVE			
SIZE	ESTIMATED USAGE	UNIT PRICE	EXTENDED PRICE
4"	2		
6"	2		
8"	2		
10"	2		
12"	2		
16"	2		
18"	2		
20"	2		
24"	2		
TOTAL			

	FLANGE BOLTS & GASKETS - STAINLESS STEEL			
SIZE	SIZE	ESTIMATED USAGE	UNIT PRICE	EXTENDED PRICE
4"	4"	15		
6"	6"	25		
8"	8"	15		
10"	10"	5		
12"	12"	5		
	TOTAL			

Butterfly Valves

Butterfly valves and operators shall conform to AWWA standards for rubber-seated butterfly valves, AWWA Standard C504, and to these specifications:

1. Type of body shall be short body, flanged or mechanical joint.
2. Body material shall be cast iron or ductile iron.
3. Class shall be specified on the plans or contract specifications.
4. Shaft shall be type 304 or 316 stainless steel.
5. Flanged holes shall be drilled to full size.
6. Valve seat shall be natural rubber or Buna-N and polished stainless steel, type 304 or 316, 90-degree seating angle only, with a 360-degree, uninterrupted seating surface.
7. Shaft seals shall be standard split-V packing or double O-ring seal cartridges.
8. Disc shall be ductile iron, cast iron, or fabricated steel.
9. Operating nuts shall be ductile iron.

M.J. x M.J. BUTTERFLY VALVE			
SIZE	ESTIMATED USAGE	UNIT PRICE	EXTENDED PRICE
12"	1		
14"	1		
16"	1		
18"	1		
20"	1		
24"	1		
TOTAL			

FLANGED x M.J. BUTTERFLY VALVE			
SIZE	ESTIMATED USAGE	UNIT PRICE	EXTENDED PRICE
12"	1		
14"	1		
16"	1		
18"	1		
20"	1		
24"	1		
TOTAL			

FLANGED x FLANGED BUTTERFLY VALVE			
SIZE	ESTIMATED USAGE	UNIT PRICE	EXTENDED PRICE
12"	1		
14"	1		
16"	1		
18"	1		
20"	1		
24"	1		
TOTAL			

Ductile Iron Mechanical Joint Fittings

Fittings shall be cast from ductile iron in accordance with **ANSI/AWWA C153/A21.53** with mechanical joint bells. Glands, bolts, nuts, and gaskets shall be in accordance with requirements of **ANSI/AWWA C153/A21.53** Fittings shall be listed by an approved certifying agency as conforming to the requirements of **ANSI/NSF 61.** The working pressure rating shall be 350 psi. Fittings shall have an asphaltic outside coating in accordance with **ANSI/AWWA C153/A21.53.** Fittings shall be cement lined and seal coated in accordance with **ANSI/AWWA C104/A21.4** and listed by an approved certifying agency as conforming to the requirements of **ANSI/NSF 61.**

M.J. CAPS			
SIZE	ESTIMATED USAGE	UNIT PRICE	EXTENDED PRICE
2"	5		
4"	5		
6"	10		
8"	5		
10"	6		
12"	6		
TOTAL			

M.J. SOLID SLEEVE			
SIZE	ESTIMATED USAGE	UNIT PRICE	EXTENDED PRICE
4"	5		
6"	20		
8"	10		
10"	6		
12"	6		
14"	2		
16"	2		
18"	2		
20"	2		
24"	2		
TOTAL			

M.J. PLUGS			
SIZE	ESTIMATED USAGE	UNIT PRICE	EXTENDED PRICE
2"	5		
4"	5		
6"	10		
8"	5		
10"	6		
12"	6		
TOTAL			

	M.J. BENDS			
SIZE	BEND	ESTIMATED USAGE	UNIT PRICE	EXTENDED PRICE
2"	90	4		
4"	90	4		
6"	90	20		
8"	90	10		
10"	90	6		
12"	90	2		
14"	90	1		
16"	90	1		
18"	90	1		
20"	90	1		
24"	90	1		
2"	45	4		
4"	45	4		
6"	45	8		
8"	45	6		
10"	45	4		
12"	45	4		
14"	45	1		
16"	45	1		
18"	45	1		
20"	45	1		
24"	45	1		
TOTAL				

M.J. REDUCERS			
SIZE	ESTIMATED USAGE	UNIT PRICE	EXTENDED PRICE
4" x 2"	10		
6" x 2"	4		
6" x 4"	15		
8" x 4"	1		
8" x 6"	1		
10" x 4"	1		
10" x 6"	2		
10" x 8"	2		
12" x 4"	1		
12" x 6"	3		
12" x 8"	1		
12" x 10"	1		
14" x 12"	1		
16" x 12"	1		
18" x 12"	1		
20" x 12"	1		
24" x 12"	1		
TOTAL			

	M.J. BENDS			
SIZE	BEND	ESTIMATED USAGE	UNIT PRICE	EXTENDED PRICE
2"	22 1/2	4		
4"	22 1/2	4		
6"	22 1/2	4		
8"	22 1/2	4		
10"	22 1/2	4		
12"	22 1/2	2		
14"	22 1/2	1		
16"	22 1/2	1		
18"	22 1/2	1		
20"	22 1/2	1		
24"	22 1/2	1		
4"	11 1/4	2		
6"	11 1/4	2		
8"	11 1/4	2		
10"	11 1/4	2		
12"	11 1/4	2		
14"	11 1/4	1		
16"	11 1/4	1		
18"	11 1/4	1		
20"	11 1/4	1		
24"	11 1/4	1		
TOTAL				

M.J. TEE			
SIZE	ESTIMATED USAGE	UNIT PRICE	EXTENDED PRICE
4" x 2"	4		
4" x 4"	5		
6" x 2"	4		
6" x 4"	4		
6" x 6"	20		
8" x 4"	1		
8" x 6"	6		
8" x 8"	2		
10" x 4"	1		
10" x 6"	2		
10" x 8"	2		
10" x 10"	2		
12" x 4"	1		
12" x 6"	3		
12" x 8"	1		
12" x 10"	1		
12" x 12"	4		
14" x 6"	1		
14" x 8"	1		
14" x 10"	1		
14" x 12"	1		
14" x 14"	1		
16" x 6"	1		
16" x 8"	1		
16" x 10"	1		
16" x 12"	1		
16" x 14"	1		
16" x 16"	1		
18" x 6"	1		
18" x 10"	1		
18" x 12"	1		
18" x 14"	1		
18" x 16"	1		
18" x 18"	1		
20" x 6"	1		
20" x 8"	1		
20" x 10"	1		
20" x 12"	1		
20" x 14"	1		
20" x 16"	1		
18" x 18"	1		
20" x 20"	1		
24" x 6"	1		

***continue on upper right column**

****CONTINUED FROM LEFT COLUMN****

24" x 8"	1		
24" x 10"	1		
24" x 12"	1		
24" x 14"	1		
24" x 16"	1		
24" x 18"	1		
24" x 20"	1		
24" x 24"	1		
TOTAL			

M.J. CROSS			
SIZE	ESTIMATED USAGE	UNIT PRICE	EXTENDED PRICE
4" x 4"	2		
6" x 4"	2		
6" x 6"	2		
8" x 4"	1		
8" x 6"	1		
8" x 8"	1		
10" x 4"	1		
10" x 6"	1		
10" x 8"	1		
10" x 10"	1		
12" x 4"	1		
12" x 6"	1		
12" x 8"	1		
12" x 10"	1		
12" x 12"	1		
TOTAL			

FLANGE TO M.J. ADAPTERS			
SIZE	ESTIMATED USAGE	UNIT PRICE	EXTENDED PRICE
4"	5		
6"	5		
8"	5		
10"	5		
12"	5		
TOTAL			

M.J. x FLANGE 90 ADAPTERS			
SIZE	ESTIMATED USAGE	UNIT PRICE	EXTENDED PRICE
4"	5		
6"	5		
8"	5		
10"	5		
12"	5		
TOTAL			

*MEGA LUG 2000 SERIES			
*RESTRAINT GLANDS (FOR C900 PVC) SETS			
SIZE	ESTIMATED USAGE	UNIT PRICE	EXTENDED PRICE
4"	20		
6"	100		
8"	50		
10"	20		
12"	20		
14"	10		
16"	10		
18"	10		
20"	10		
24"	10		
TOTAL			

*MEGA LUG 1100 SERIES			
*MECHANICAL JOINT ACCESSORY SET			
SIZE	ESTIMATED USAGE	UNIT PRICE	EXTENDED PRICE
4"	20		
6"	100		
8"	50		
10"	20		
12"	20		
14"	10		
16"	10		
18"	10		
20"	10		
24"	10		
TOTAL			

RESTRAINER CLAMPS			
SIZE	ESTIMATED USAGE	UNIT PRICE	EXTENDED PRICE
4"	20		
6"	50		
8"	20		
10"	20		
12"	10		
14"	10		
16"	10		
18"	10		
20"	10		
24"	10		
TOTAL			

RESTRAINT GLAND (FOR C.I.P.)			
SIZE	ESTIMATED USAGE	UNIT PRICE	EXTENDED PRICE
4"	20		
6"	100		
8"	50		
10"	20		
12"	20		
14"	10		
16"	10		
18"	10		
20"	10		
24"	10		
TOTAL			

MECHANICAL JOINT ACCESSORY KIT			
SIZE	ESTIMATED USAGE	UNIT PRICE	EXTENDED PRICE
2"	10		
4"	20		
6"	100		
8"	50		
10"	20		
12"	20		
14"	10		
16"	10		
18"	10		
20"	10		
24"	10		
TOTAL			20

Specifications – Fire Hydrants

Fire hydrants shall meet or exceed **AWWA C502**, latest revisions. Rated water working pressure shall be 150 psi, test pressure shall be 300 psi, and hydrants shall include the following specific design criteria:

1. The main valve closure shall be of the compression type, opening against the pressure and closing with the pressure. Traffic feature to be designed so that the nozzle section of the hydrant can be rotated (by degree) to full 360-degree circle during field installation, if necessary.

2. The main valve closure shall not be less than 5 ¼" and designed so that removal of seat, drain valve mechanism, internal rod and all working parts can be removed through the top of the hydrant. These parts shall be removable without disturbing the ground line joint or the nozzle section of the fire hydrant. The bronze seat shall be threaded into mating threads of bronze for easy field removal.

3. The operating nut, main stem, coupling and main valve assembly shall be capable of withstanding input torque of 200 ft/lbs., in opening and closing directions. There shall be an internal top housing, with triple O-rings, to seal operating threads from the waterway and accommodate an anti-friction washer.

4. Nozzle section of hydrant shall be designed to permit field replacement of damaged threads without special tools, excavation, or disturbing the ground line joint. Threading of the nozzles and shape operating nut shall be per City of Sherman.

5. Hydrants shall have a **storz pumper** connection.

6. Direction of opening shall be clockwise.

7. Hydrant color shall be aluminum.

8. Lower barrel shall be stenciled: Sherman, TX

9. Fire hydrants shall be **Mueller Super Centurion, Waterous Pacer, American AVK nostalgic (2780), Clow Medallion, or M & H style 129.**

FIRE HYDRANTS			
SIZE	ESTIMATED USAGE	UNIT PRICE	EXTENDED PRICE
2'	1		
2 1/2'	1		
3'	5		
3 1/2'	5		
4'	10		
4 1/2'	10		
5'	10		
5 1/2	5		
6'	3		
6 1/2'	3		
7'	2		
TOTAL			

FIRE HYDRANT EXTENSION KIT			
SIZE	ESTIMATED USAGE	UNIT PRICE	EXTENDED PRICE
6"	10		
12"	5		
TOTAL			

TRAFFIC FLANGE REPAIR KIT			
SIZE	ESTIMATED USAGE	UNIT PRICE	EXTENDED PRICE
N/A	10		
TOTAL			

MAIN VALVE REPAIR KIT			
SIZE	ESTIMATED USAGE	UNIT PRICE	EXTENDED PRICE
N/A	10		
TOTAL			

Specifications – Stainless Steel Repair Clamps

1. **Shell –** 304 Stainless Steel , 18 to 28 gauge, depending on size.

2. **Sidebars –** Heavy gauge 304 Stainless Steel, GTWA welded to form, permanent fusion with shell.

3. **Lugs –** 304 Stainless Steel, fused to sidebar by GMAW weld.

4. **Bolts –** 304 Stainless Steel, 4-inch clamps and small use ½" UNC rolled thread, 6- inch clamps and larger use 5/8" rolled threads. Bolts are GMAW welded to sidebar.

5. **Nuts –** Heavy hex, 304 Stainless Steel, 4-inch clamps and smaller use ½" UNC thread, 6-inch clamps and larger use 5/8" UNC threads. Nuts coated to prevent galling.

6. **Washers –** 5/8" 304 Stainless Steel flat washers, on sizes 13/55 and larger. ½" or 5/8" plastic washer between nut or Stainless Steel washer and lift bar, on all sizes.

7. **Armors –** Heavy gauge 304 Stainless Steel, bonded to gasket to bridge gap at lug area.

8. **Lifter Bars –** 304 Stainless Steel, lip curved to hold position while tightening. Heavy gauge to serve as bearing surface for nuts.

9. **Gaskets –** Virgin SBR rubber compounded for water and sewer service, in accordance with ASTM D 2000 MMA 610 resistance.

REPAIR CLAMPS ROMAC - SS1 STAINLESS STEEL OR EQUAL (FOR D.I. & C900 PVC)			
SIZE	ESTIMATED USAGE	UNIT PRICE	EXTENDED PRICE
2" x 8"	50		
2" x 10"	50		
2" x 12"	50		
2" x 16"	50		
4" x 8"	50		
4" x 10"	50		
4" x 12"	50		
4" x 16"	50		
4" x 20"	10		
6" x 8"	100		
6" x 10"	100		
6" x 12"	100		
6" x 16"	50		
6" x 20"	25		
8" x 8"	25		
8" x 10"	25		
8" x 12"	50		
8" x 16"	50		
8" x 20"	25		
10" x 8"	20		
10" x 10"	20		
10" x 12"	25		
10" x 16"	25		
10" x 20"	10		
12" x 8"	10		
12" x 10"	10		
12" x 12"	25		
12" x 16"	25		
12" x 20"	25		
14" x 24"	6		
16" x 24"	6		
18" x 24"	6		
20" x 24"	6		
24" x 24"	6		
TOTAL			

Specifications – Stainless Steel Tapping Sleeves

1. **Flange –** Ductile iron that meets or exceeds ASTM A536 standards. All flanges in accordance with ANSI class 125 and 150 drilling and recess to accept tapping valve.

2. **Stainless Steel –** Meets or exceeds ASTM A 240 type 304 USN-designated S30400.

3. **Outlet –** Heavy gauge 304L Stainless Steel. Fused to shell by GMAW weld on the outside and GTAW weld on the inside.

4. **Shell –** Heavy gauge Stainless Steel top half 304L, back half 304.

5. **Side Bars –** Heavy gauge 304 Stainless Steel, GTAW welded to form permanent fusion with shell.

6. **Lugs –** 304 Stainless Steel, fused to sidebar by GMAW welding.

7. **Bolts –** 304 Stainless Steel, bolts are to be GMAW welded to sidebar.

8. **Nuts –** Heavy hex, coated to prevent galling.

9. **Armors –** Heavy gauge 304 Stainless Steel.

10. **Lifter Bars** – 304 Stainless Steel lip curved to hold position while tightening. Heavy gauge to serve as bearing surface for nuts.

11. **Gaskets** – Virgin SBR rubber compounded for water and sewer service, in accordance with ASTM D 2000 MMA610. Grid pattern and tapered ends to assure seal around full circumference of pipe. Working pressure up to 200 psi. Test pressure of 300 psi.

12. **Welds** – GMAW and GTAW weld process. 308L Stainless Steel filler wire used as appropriate. Flange weld-GMAW type proprietary process. All welds will be fully passivated to enhance corrosion resistance.

STAINLESS STEEL TAPPING SLEEVE			
SIZE	ESTIMATED USAGE	UNIT PRICE	EXTENDED PRICE
4" x 4"	4		
6" x 4"	6		
6" x 6"	10		
8" x 4"	1		
8" x 6"	4		
8" x 8"	4		
10" x 4"	1		
10" x 6"	4		
10" x 8"	2		
10" x 10"	2		
12" x 4"	1		
12" x 6"	2		
12" x 8"	2		
12" x 10"	2		
12" x 12"	2		
14" x 6"	1		
14" x 8"	1		
14" x 10"	1		
14" x 12"	1		
16" x 6"	1		
16" x 8"	1		
16" x 10"	1		
16" x 12"	1		
18" x 6"	1		
18" x 8"	1		
18" x 10"	1		
18" x 12"	1		
20" x 6"	1		
20" x 8"	1		
20" x 10"	1		
20" x 12"	1		
24" x 6"	1		
24" x 8"	1		
24" x 10"	1		
24" x 12"	1		
TOTAL			

BRASS PIPE FITTINGS - ***NO LEAD BRASS***			
SIZE	ESTIMATED USAGE	UNIT PRICE	EXTENDED PRICE
1/2" CLOSE NIPPLE	50		
1/2" x 1 1/2" NIPPLE	50		
1/2 x 2" NIPPLE	50		
1/2" x 2 1/2" NIPPLE	50		
1/2" x 3" NIPPLE	50		
1/2" x 3 1/2" NIPPLE	50		
1/2" x 4" NIPPLE	50		
1/2" x 4 1/2" NIPPLE	50		
1/2" x 5 NIPPLE	50		
1/2" x 5 1/2 NIPPLE	50		
1/2" x 6 NIPPLE	50		
1/2 x 6 1/2 " NIPPLE	50		
1/2" x 1/2" 90 ELL	100		
1/2" STREET 90 ELL	100		
1/2" TEE	50		
1/2" COUPLING	100		
1/2" x 3/4 BELL REDUCER	200		
1/2" x 3/4" BUSHING REDUCER	200		
1/2" MIP PLUG	200		
COMPRESSION COUPLING FOR 1/2" COPPER	100		
COMPRESSION COUPLING FOR 1/2" IRON PIPE	100		
1/2" HOSE BIB	50		
3/4" CLOSE NIPPLE	600		
3/4" x 1 1/2" NIPPLE	600		
3/4" x 2" NIPPLE	600		
3/4" x 2 1/2" NIPPLE	600		
3/4" x 3" NIPPLE	600		
3/4" x 3 1/2" NIPPLE	200		
3/4" x 4" NIPPLE	200		
3/4" x 4 1/2" NIPPLE	100		
3/4" x 5" NIPPLE	100		
3/4" HOSE BIB	50		
34" x 5 1/2" NIPPLE	50		
3/4" x 6" NIPPLE	50		
3/4" x 6 1/2" NIPPLE	50		
3/4" 90 ELL	300		
3/4" TEE	200		

CONTINUE ON NEXT PAGE**

***CONTINUED**

BRASS PIPE FITTINGS - *NO LEAD BRASS*			
SIZE	ESTIMATED USAGE	UNIT PRICE	EXTENDED PRICE
3/4" COUPLING	500		
3/4" x 1/2" 90 ELL	1000		
3/4" STREET 90 ELL	200		
3/4" C.F. x M.I.P. ADAPTER	500		
3/4" C.F. x C.F. THREE PART UNION	200		
COMPRESSION COUPLING FOR 3/4" COPPER	300		
COMPRESSION COUPLING FOR 3/4" IRON PIPE	100		
1" CLOSE NIPPLE	300		
1" x 1 1/2" NIPPLE	300		
1" x 2" NIPPLE	300		
1" x 2 1/2" NIPPLE	300		
1" x 3" NIPPLE	100		
1" x 3 1/2 NIPPLE	100		
1" x 4 NIPPLE	100		
1" x 4 1/2" NIPPLE	100		
1" x 5" NIPPLE	100		
1" x 5 1/2" NIPPLE	100		
1" x 6" NIPPLE	100		
1" x 6 1/2" NIPPLE	50		
1" 90 ELL	200		
1" STREET 90 ELL	100		
1" TEE	200		
1" COUPLING	300		
1" x 3/4" BELL REDUCER	300		
1" x 3/4" BUSHING REDUCER	300		
1" x 3/4" 90 ELL	200		
1" C.F. x M.I.P. ADAPTER	200		
1" C.F. x C.F. THREE PART UNION	200		
COMPRESSION COUPLING FOR 1" I.P.	200		
COMPRESSION COUPLING FOR 1" I.P.	100		
1 1/2" x CLOSE NIPPLE	10		

CONTINUE ON NEXT PAGE*

****CONTINUED**

BRASS PIPE FITTINGS - *NO LEAD BRASS*			
SIZE	ESTIMATED USAGE	UNIT PRICE	EXTENDED PRICE
1 1/2" x 3" NIPPLE	10		
1 1/2" x 4" NIPPLE	10		
1 1/2" x 5" NIPPLE	10		
1 1/2" x 6" NIPPLE	10		
1 1/2" x 7" NIPPLE	10		
1 1/2" x 8" NIPPLE	10		
1 1/2" x 1" BUSHING REDUCER	10		
1 1/2" x 1" BELL REDUCER	10		
1 1/2" COUPLING	10		
1 1/2" 90 ELL	10		
1 1/2" TEE	10		
1 1/2" x 1 1/4" BUSHING REDUCER	10		
1 1/2" C.F. x M.I.P. ADAPTER	25		
1 1/2" C.F. x C.F. THREE PART UNION	50		
COMPRESSION COUPLING FOR 1 1/2"	50		
2" x CLOSE NIPPLE	10		
2" x 3" NIPPLE	10		
2" x 4" NIPPLE	10		
2" x 5" NIPPLE	10		
2" x 6" NIPPLE	10		
2" x 7" NIPPLE	10		
2" x 8" NIPPLE	10		
2" x 1 1/2" REDUCING BUSHING	10		
2" x 1 1/2" BELL REDUCER	10		
2" COUPLING	10		
2" 90 ELL	10		
2" TEE	10		
2" C.F. x M.I.P. ADAPTER	25		
2" C.F. x C.F. THREE PART UNION	20		
COMPRESSION COUPLING FOR 2" COPPER (FORD C44-	20		
COMPRESSION COUPLING FOR 2" I.P.	20		
TOTAL			

METER COUPLINGS -- NO LEAD BRASS				
SIZE	ESTIMATED USAGE	UNIT PRICE		EXTENDED PRICE
5/8" - 1/4 BEND METER COUPLING	500			
3/4" - 1/4 BEND METER COUPLING	500			
1" - 1/4 BEND METER COUPLING	100			
TOTAL				

CURB STOPS -- NO LEAD BRASS				
SIZE	ESTIMATED USAGE	UNIT PRICE		EXTENDED PRICE
3/4" F.I.P. x 3/4" F.I.P.	200			
3/4" F.I.P. x 3/4" C.F.	500			
3/4" F.I.P. x 3/4" PACK JOINT COPPER	200			
1" F.I.P. x 1" F.I.P.	200			
1" F.I.P. x 1" C.F.	200			
1" F.I.P. x 1" PACK JOINT COPPER	100			
1 1/2 F.I.P. x 1 1/2" F.I.P.	20			
1 1/2" F.I.P. x 1 1/2" C.F.	30			
1 1/2" F.I.P. x 1 1/2" PACK JOINT COPPER	30			
2" F.I.P. x 2" F.I.P.	30			
2" F.I.P. x 2" C.F.	30			
2" F.I.P. x 2" PACK JOINT COPPER	30			
TOTAL				

CORPORATION STOPS (FULL PORT) - NO LEAD BRASS				
SIZE	ESTIMATED USAGE	UNIT PRICE		EXTENDED PRICE
3/4" C.C. x 3/4" C.F.	300			
3/4" C.C. x 3/4" PACK JOINT COPPER	100			
1" C.C. x 1" C.F.	200			
1" C.C. x 1" PACK JOINT COPPER	100			
1 1/2" C.C. x 1 1/2" C.F.	100			
1 1/2" C.C. x 1 1/2" PACK JOINT COPPER	50			
2" C.C. x 2" C.F.	100			
2" C.C. x 2" PACK JOINT COPPER	50			
TOTAL				

COPPER TUBE TYPE "K" - 60' ROLL				
SIZE	ESTIMATED USAGE	UNIT PRICE		EXTENDED PRICE
3/4"	1 ROLL			
1"	1 ROLL			
1 1/2"	1 ROLL			
40' ROLLS	1 ROLL			
TOTAL				

POLY (MUNICIPEX)				
SIZE	ESTIMATED USAGE	UNIT PRICE		EXTENDED PRICE
3/4"	75 ROLLS			
1"	50 ROLLS			
1 1/2"	20 ROLLS			
2"	20 ROLLS			
TOTAL				

SERVICE SADDLES					
DOUBLE STRAP SERVICE STRADDLES					
NYLON COATED SADDLES WITH STAINLESS STEEL STRAPS					
ROMAC STYLE 202N or		ESTIMATED USAGE	UNIT PRICE		EXTENDED PRICE
PIPE SIZE	SERVICE				
4"	3/4"	100			
4"	1"	50			
4"	1 1/2"	10			
4"	2"	10			
6"	3/4"	500			
6"	1"	200			
6"	1 1/2"	25			
6"	2"	25			
8"	3/4"	100			
8"	1"	100			
8"	1 1/2"	15			
8"	2"	15			
10"	3/4"	50			
10"	1"	50			
10"	1 1/2"	15			
10"	2"	15			
12"	3/4"	50			
12"	1"	25			
12"	1 1/2"	15			
12"	2"	15			
14"	3/4"	6			
14"	1"	6			
14"	1 1/2"	6			
14"	2"	6			
16"	3/4"	4			
16"	1"	4			
16"	1 1/2"	4			
16"	2"	4			
18"	3/4"	4			
18"	1"	4			
18"	1 1/2"	4			
18"	2"	4			
20"	3/4"	4			
20"	1"	4			
20"	1 1/2"	4			
20"	2"	4			
24"	3/4"	4			

CONTINUE ON NEXT PAGE

***CONTINUED**

24"	1"	4			
24"	1 1/2"	4			
24"	2"	4			
ROMAC STYLE 101N OR EQUAL		**ESTIMATED USAGE**	**UNIT PRICE**		**EXTENDED PRICE**
PIPE SIZE	SERVICE				
2"	3/4"	100			
2"	1"	75			
TOTAL					

ADJUSTABLE CAST IRON VALVE BOX 24" TO 36"			
SIZE	ESTIMATED USAGE	UNIT PRICE	EXTENDED PRICE
BOX & LID	100		
BOX	100		
LID	100		
TOTAL			

VALVE BOX RISERS (CAST IRON)			
SIZE	ESTIMATED USAGE	UNIT PRICE	EXTENDED PRICE
1"	40		
2"	40		
3"	40		
4"	40		
6"	40		
TOTAL			

MANHOLE GASKETS			
SIZE	ESTIMATED USAGE	UNIT PRICE	EXTENDED PRICE
4"	20		
6"	20		
8"	20		
10"	20		
12"	10		
15"	10		
18"	10		
21"	10		
24"	10		
TOTAL			

MANHOLE RING & LID 32"			
DESCRIPTION	ESTIMATED USAGE	UNIT PRICE	EXTENDED PRICE
RING & LID	50		
RING	50		
LID	50		
VENTILATED MANHOLE	2		
RING & LID (BOLT DOWN)	10		
TOTAL			

MANHOLE EXTENSION RINGS			
SIZE	ESTIMATED USAGE	UNIT PRICE	EXTENDED PRICE
32"x 2"	20		
32" x 3"	20		
32" x 4"	20		
32" x 6"	20		
TOTAL			

METER BOXES				
DESCRIPTION	PART #	ESTIMATED USAGE	UNIT PRICE	EXTENDED PRICE
PLASTIC METER BOX WITH LID	DFW 300 OR EQUAL	400		
LIDS	(FOR ABOVE)	200		
CONCRETE METER BOX WITH LID	BROOKS #37-H OR EQUAL	10		
LIDS	(FOR ABOVE)	20		
CONCRETE METER BOX WITH LID	BROOKS #37-H OR EQUAL	10		
LIDS	(FOR ABOVE)	20		
PLASTIC METER BOX WITH LID	DFW 1600 OR EQUAL	100		
LIDS	(FOR ABOVE)	100		
TOTAL				

FIBERGLASS MANHOLES			
SIZE	ESTIMATED USAGE	UNIT PRICE	EXTENDED PRICE
4'	10		
5'	10		
6'	10		
7'	10		
8'	10		
TOTAL			

4" SCHEDULE 40 DRAIN FITTINGS			
TYPE	ESTIMATED USAGE	UNIT PRICE	EXTENDED PRICE
22 1/2	100		
45	100		
90	100		
SAN TEE	100		
2-WAY TEE	100		
CAP	100		
GLUE TO F. ADAPTOR	100		
THREAD PLUG	100		
TOTAL			

4" SEWER TAPPING SADDLES -- PREDCO STS 4-E OR EQUAL				
SIZE	ESTIMATED USAGE	UNIT PRICE		EXTENDED PRICE
4" SADDLE TEE (FERNCO)	1 ROLL	200		
INSERTA TEE	1 ROLL	100		
WRAP-AROUND FERNCO 4" x 6"	1 ROLL	200		
WRAP-AROUND FERNCO 4" x 8"	1 ROLL	100		
TOTAL				

CLAY TILE X SDR 35 PVC ADAPTERS - FERNCO OR EQUAL				
SIZE	ESTIMATED USAGE	UNIT PRICE		EXTENDED PRICE
4" PVC x 4" PVC (SCL 40)	1 ROLL	200		
4" CLAY x 4" PVC (SCL 40)	1 ROLL	100		
6" CLAY x 6" PVC	1 ROLL	200		
6" PVC x 6" PVC	1 ROLL	100		
8" CLAY x 8" PVC	1 ROLL	200		
8" PVC x 8" PVC	1 ROLL	100		
10" CLAY x 10" PVC	1 ROLL	200		
10" PVC x 10" PVC	1 ROLL	100		
12" CLAY x 12" PVC	1 ROLL	200		
12" PVC x 12" PVC	1 ROLL	100		
15" CLAY x 15" PVC	1 ROLL	200		
15" PVC x 15" PVC	1 ROLL	100		
18" CLAY x 18" PVC	1 ROLL	200		
18" PVC x 18" PVC	1 ROLL	100		
21" CLAY x 21" PVC	1 ROLL	200		
21" PVC x 21" PVC	1 ROLL	100		
24" CLAY x 24" PVC	1 ROLL	200		
24" PVC x 24" PVC	1 ROLL	100		
TOTAL				

GRAND TOTAL FOR NON-PVC BID SECTION $_____

PVC WATER PIPE				
SIZE	TYPE - 20' JOINT	ESTIMATED USAGE (L.F.)	UNIT PRICE (PER L.F.)	EXTENDED PRICE
2"	CLASS 200 PSI	500		
4"	CLASS 150 DR 18 (C.I.O.D.) PER AWWA	200		
6"	CLASS 150 DR 18 (C.I.O.D.) PER AWWA	2000		
8"	CLASS 150 DR 18 (C.I.O.D.) PER AWWA	1000		
10"	CLASS 150 DR 18 (C.I.O.D.) PER AWWA	200		
12"	CLASS 150 DR 18 (C.I.O.D.) PER AWWA	100		
14"	DR 18 (C.I.O.D.) PER AWWA STANDARD C905	80		
16"	DR 18 (C.I.O.D.) PER AWWA STANDARD C906	80		
18"	DR 18 (C.I.O.D.) PER AWWA STANDARD C907	80		
20"	DR 18 (C.I.O.D.) PER AWWA STANDARD C908	160		
24"	DR 18 (C.I.O.D.) PER AWWA STANDARD C909	80		
TOTAL				

PVC SEWER PIPE				
SIZE	TYPE - 20' JOINT	ESTIMATED USAGE (L.F.)	UNIT PRICE (PER L.F.)	EXTENDED PRICE
4"	SCHEDULE 40 PVC	600		
4"	DR 35 (P.S. 46) PMS-O.D. PER ASTM D3034	100		
6"	DR 35 (P.S. 46) PMS-O.D. PER ASTM D3034	2000		
8"	DR 35 (P.S. 46) PMS-O.D. PER ASTM D3034	800		
10"	DR 35 (P.S. 46) PMS-O.D. PER ASTM D3034	600		
12"	DR 35 (P.S. 46) PMS-O.D. PER ASTM D3034	600		
15"	DR 35 (P.S. 46) PMS-O.D. PER ASTM D3034	400		
18"	DR 35 (P.S. 46) PMS-O.D. PER ASTM F679	400		
21"	DR 35 (P.S. 46) PMS-O.D. PER ASTM F679	100		
24"	DR 35 (P.S. 46) PMS-O.D. PER ASTM F679	100		
TOTAL				

SCHEDULE 40 PIPE			
SIZE	ESTIMATED USAGE	UNIT PRICE	EXTENDED PRICE
1/2"	100		
3/4"	300		
1"	300		
1 1/4"	100		
1 1/2"	100		
2"	100		
3"	60		
TOTAL			

GRAND TOTAL FOR PVC BID SECTION $_____

COMBINED **TOTAL** $_____

NOTE: Based upon the stated evaluation criteria, the City reserves the right to award both sections to one vendor or to separate vendors.

AUTHORIZED SIGNATURE

_____ **Signature and Date**	_____ **Company Name**
_____ **Print Name**	_____ **Company Address**
_____ **Title**	_____ **City, State and Zip Code**
_____ **Telephone Number**	_____ **Fax Number**
_____ **Federal Tax ID Number**	_____ **Email Address**

EVALUATION PROCESS

All submitted proposals will be reviewed by the City of Sherman for compliance with the specified RFP requirements. The selection committee will decide proposals which meet the RFP requirements and receive further evaluation.

Based on the firms' response to the RFP requirements, the selection committee will determine the top firm(s) capable of meeting the needs of the City for such services. The City may invite the top firm(s) for an interview before considering a contract. Once the firm has been selected, the City will submit an agreement to the City Council for approval. The following evaluation criteria will be considered by the selection committee.

BEST VALUE EVALUATION CRITERIA

30% Pricing
30% References
40% Qualifications (when applicable, will include past performance of services for the City of Sherman)

TERM

Term for Non-PVC Contract

The initial term for the Non-PVC contract will be for a period of one (1) year, commencing on the date of awarding. The City shall have the option to request additional extensions of this contract for four (4) additional terms of one (1) year each (each a "renewal term") on the same terms and conditions of this contract by giving written notice of its intent to extend prior to the expiration of the then-current one (1) year term.

Term for PVC Contract

The initial term for the PVC contract will be for a period of one (1) year, commencing on the date of awarding. The City shall have the option to request additional extensions of this contract for four (4) additional terms of one (1) year each (each a "renewal term") on the same terms and conditions of this contract by giving written notice of its intent to extend prior to the expiration of the then-current one (1) year term.

NOTE: Any optional contract extensions will require authorized signatures from both the City and the awarded vendor.

Contractor References

Customer Name: _____

Address: _____

Contact: _____ Telephone #: _____

Scope of work performed: _____

Length of Service: _____

Customer Name: _____

Address: _____

Contact: _____ Telephone #: _____

Scope of work performed: _____

Length of Service: _____

Customer Name: _____

Address: _____

Contact: _____ Telephone #: _____

Scope of work performed: _____

Length of Service: _____

Exhibit C
City's Insurance Requirements

I. GENERAL INSURANCE REQUIREMENTS –

A. All policies shall name the City of Sherman, its officers, agents, representatives and employees as additional insureds as to all applicable coverages with the exception of workers compensation insurance.

B. Such policies shall require the provision of written notice to City at least thirty (30) days prior to cancellation, non-renewal or material modification of any policies, evidenced by return receipt or United States Certified Mail.

C. Such policies shall provide for a waiver of subrogation against City for injuries, including death, property damage or any other loss to the extent the same is covered by the proceeds of the insurance.

II. INSURANCE COMPANY QUALIFICATION – All insurance companies providing the required insurance shall be authorized to transact business in the State of Texas, and shall have a minimum rating of "A" by A.M. Best's Key Rating Guide, or other equivalent rating service(s).

III. CERTIFICATE OF INSURANCE – A Certificate of Insurance and all applicable endorsement(s) evidencing the required insurance shall be submitted prior to commencing work under this Agreement. If the Agreement is renewed or extended by City, a Certificate of Insurance and all applicable endorsement(s) shall also be provided to City prior to the date the Agreement is renewed or extended.

IV. INSURANCE CHECKLIST – "X" means that the following coverage is required for this Agreement.

Coverage Required		Limits
X	1. Worker's Compensation & Employer's Liability	▪ Statutory Limits of the State of Texas
X	2. General Liability	▪ Minimum $1,000,000.00 each occurrence; ▪ Minimum $2,000,000.00 in the aggregate.
__	3. XCU Coverage	▪ Minimum $1,000,000.00 each occurrence; ▪ Minimum $2,000,000.00 in the aggregate.
___	4. Professional Liability	▪ Minimum $1,000,000.00 each claim; ▪ Minimum $2,000,000.00 in the aggregate.
___	5. Umbrella Coverage or Excess Liability Coverage	▪ An amount of $ 2,000,000.00.
X	6. City and its officers, agents, representatives and employees named as additional insured on General Liability Policy, as provided above. This coverage is primary to all other coverage City may possess.	
X	7. General Liability Insurance provides for a Waiver of Subrogation against City for injuries, including death, property damage, or any other loss to the extent that same is covered by the proceeds of the insurance. All insurance policies that are required to name City as an additional insured must be endorsed to read as primary and non-contributory coverage regardless of the application of other insurance.	

_X_ 8. Thirty (30) days' notice of cancellation, non-renewal, or material change required. The words "endeavor to" and "but failure" (to end of sentence) are to be eliminated from the Notice of Cancellation provision on standard ACORD certificates.

_X_ 9. Insurance company has a minimum rating of "A" by A.M. Best's Key Rating Guide, or other equivalent rating service(s).

_X_ 10. The Certificate of Insurance must state the project title.

___ 11. Other Insurance Requirements (State Below):

Exhibit D

Affidavit of No Prohibited Interest

THE STATE OF _____ §

THE COUNTY OF _____ §

I, _____, an authorized agent of Contractor, make this affidavit and hereby under oath state the following:

I, and/or a person or persons related to me, have the following interest in a business entity that would be affected by the work or decision under this Agreement (Check all that apply):

_____ Ownership of ten percent (10%) or more of the voting shares of the business entity.

_____ Ownership of Twenty-Five Thousand and 00/100 Dollars ($25,000) or more of the fair market value of the business entity.

_____ Funds received from the business entity exceed ten percent (10%) of my income for the previous year.

_____ Real property is involved, and I have an equitable or legal ownership with a fair market value of at least Twenty-Five Thousand and 00/100 Dollars ($25,000).

_____ A relative of mine has a substantial interest in the business entity or property that would be affected by my business decision of the public body which I am a member.

_____ Other:_____.

_____ None of the Above.

Upon filing this affidavit with the City of Sherman, Texas, I further affirm that no relative of mine, in the first degree by consanguinity or affinity, as defined in Chapter 573, TEX. GOV'T CODE, as amended, is a member of a public body which took action on the agreement.

Signed this ___ day of _____, 202_.

_____
Signature of Official/Title

BEFORE ME, the undersigned authority, this day personally appeared _____, and on oath stated that the facts hereinabove stated are true to the best of his/her knowledge or belief.

Sworn to and subscribed before me on this _____ day of _____, 202_.

_____
Notary Public in and for the State of _____
My commission expires: _____

CONFLICT OF INTEREST QUESTIONNAIRE

FORM CIQ

For vendor doing business with local governmental entity

This questionnaire reflects changes made to the law by H.B. 23, 84th Leg., Regular Session.

This questionnaire is being filed in accordance with Chapter 176, Local Government Code, by a vendor who has a business relationship as defined by Section 176.001(1-a) with a local governmental entity and the vendor meets requirements under Section 176.006(a).

By law this questionnaire must be filed with the records administrator of the local governmental entity not later than the 7th business day after the date the vendor becomes aware of facts that require the statement to be filed. *See* Section 176.006(a-1), Local Government Code.

A vendor commits an offense if the vendor knowingly violates Section 176.006, Local Government Code. An offense under this section is a misdemeanor.

OFFICE USE ONLY

Date Received

1 **Name of vendor who has a business relationship with local governmental entity.**

2 ☐ **Check this box if you are filing an update to a previously filed questionnaire.** (The law requires that you file an updated completed questionnaire with the appropriate filing authority not later than the 7th business day after the date on which you became aware that the originally filed questionnaire was incomplete or inaccurate.)

3 **Name of local government officer about whom the information is being disclosed.**

_____

Name of Officer

4 **Describe each employment or other business relationship with the local government officer, or a family member of the officer, as described by Section 176.003(a)(2)(A). Also describe any family relationship with the local government officer. Complete subparts A and B for each employment or business relationship described. Attach additional pages to this Form CIQ as necessary.**

A. Is the local government officer or a family member of the officer receiving or likely to receive taxable income, other than investment income, from the vendor?

☐ Yes ☐ No

B. Is the vendor receiving or likely to receive taxable income, other than investment income, from or at the direction of the local government officer or a family member of the officer AND the taxable income is not received from the local governmental entity?

☐ Yes ☐ No

5 **Describe each employment or business relationship that the vendor named in Section 1 maintains with a corporation or other business entity with respect to which the local government officer serves as an officer or director, or holds an ownership interest of one percent or more.**

6 ☐ Check this box if the vendor has given the local government officer or a family member of the officer one or more gifts as described in Section 176.003(a)(2)(B), excluding gifts described in Section 176.003(a-1).

7

_____ _____

Signature of vendor doing business with the governmental entity Date

CONFLICT OF INTEREST QUESTIONNAIRE
For vendor doing business with local governmental entity

A complete copy of Chapter 176 of the Local Government Code may be found at http://www.statutes.legis.state.tx.us/Docs/LG/htm/LG.176.htm. For easy reference, below are some of the sections cited on this form.

Local Government Code § 176.001(1-a): "Business relationship" means a connection between two or more parties based on commercial activity of one of the parties. The term does not include a connection based on:

(A) a transaction that is subject to rate or fee regulation by a federal, state, or local governmental entity or an agency of a federal, state, or local governmental entity;

(B) a transaction conducted at a price and subject to terms available to the public; or

(C) a purchase or lease of goods or services from a person that is chartered by a state or federal agency and that is subject to regular examination by, and reporting to, that agency.

Local Government Code § 176.003(a)(2)(A) and (B):

(a) A local government officer shall file a conflicts disclosure statement with respect to a vendor if:

***

(2) the vendor:

(A) has an employment or other business relationship with the local government officer or a family member of the officer that results in the officer or family member receiving taxable income, other than investment income, that exceeds $2,500 during the 12-month period preceding the date that the officer becomes aware that

(i) a contract between the local governmental entity and vendor has been executed; or

(ii) the local governmental entity is considering entering into a contract with the vendor;

(B) has given to the local government officer or a family member of the officer one or more gifts that have an aggregate value of more than $100 in the 12-month period preceding the date the officer becomes aware that:

(i) a contract between the local governmental entity and vendor has been executed; or

(ii) the local governmental entity is considering entering into a contract with the vendor.

Local Government Code § 176.006(a) and (a-1)

(a) A vendor shall file a completed conflict of interest questionnaire if the vendor has a business relationship with a local governmental entity and:

(1) has an employment or other business relationship with a local government officer of that local governmental entity, or a family member of the officer, described by Section 176.003(a)(2)(A);

(2) has given a local government officer of that local governmental entity, or a family member of the officer, one or more gifts with the aggregate value specified by Section 176.003(a)(2)(B), excluding any gift described by Section 176.003(a-1); or

(3) has a family relationship with a local government officer of that local governmental entity.

(a-1) The completed conflict of interest questionnaire must be filed with the appropriate records administrator not later than the seventh business day after the later of:

(1) the date that the vendor:

(A) begins discussions or negotiations to enter into a contract with the local governmental entity; or

(B) submits to the local governmental entity an application, response to a request for proposals or bids, correspondence, or another writing related to a potential contract with the local governmental entity; or

(2) the date the vendor becomes aware:

(A) of an employment or other business relationship with a local government officer, or a family member of the officer, described by Subsection (a);

(B) that the vendor has given one or more gifts described by Subsection (a); or

(C) of a family relationship with a local government officer.

TEXAS ETHICS FORM 1295 & VERIFICATION FORM 2270

NOTE: TEC Form 1295 will not be required for all submitting contractors, but, will be required from the recommended contractor prior to award. Verification Form 2270 is required with all proposal submittals. See next page for forms.

INSTRUCTIONS for
State Law Mandated Certificate of Interested Parties Form (Form 1295)

1. Pursuant to House Bill 1295 passed by the 84th Texas Legislature (Section 2252.908, Texas Government Code, as amended) and formal rules released by the Texas Ethics Commission (TEC), all contracts with private business entities requiring approval by the Sherman City Council must be accompanied by an original signature unsworn declaration, Certificate of Interested Parties, Form 1295.

2. Form 1295 must be completed in accordance with the TEC Rules: (https://www.ethics.state.tx.us/legal/ch46.html) and Section 2252.908 of the Texas Government Code, as amended: (http://www.legis.state.tx.us/tlodocs/84R/billtext/html/HB01295F.htm).

3. For questions or issues regarding the TEC rules and state law provisions and how Form 1295 should be completed, please consult with your own legal counsel.

4. In order to fill out and submit Form 1295, you will need to log in as directed on the TEC website: https://www.ethics.state.tx.us/whatsnew/elf info form1295.htm

   Tutorials for creating an account and for creating and submitting Form 1295 may also be found on this web page.

5. Please provide the bolded information exactly as it appears below when creating your certificate:

   Who is the contract with? Click the button for **Other**

   Governmental Entity

   Agency/Entity Name: **City of Sherman**

   Contract ID Number: **2022-07**

   Description of Goods and Services to be provided: **Annual Supply of Water & Sewer Parts and Supplies**

6. All other fields as required or as applicable to the individual vendor must be completed as explained in the tutorial video.

7. Vendors must provide a signed, original signature copy of this form along with four signed, notarized, original signature copies of the contract no later than 14 days after Notice of Recommendation for Award is received. All documents shall be signed by an Officer, Director or other Authorized Agent of the company. If the individual signing as Authorized Agent is not an officer or director of the company, appropriate documentation must be included with these documents to confirm that the individual has the authority to bind the company contractually.

rev. 1/26/2018

VERIFICATION REQUIRED BY TEXAS GOVERNMENT CODE CHAPTER 2270

By signing below, the signatory hereby verifies that the firm it represents:

1. Does not boycott Israel; and,

2. Will not boycott Israel during the term of the contract.

SIGNED BY: _____

Print Name & Title: _____

Firm Name: _____

Date Signed: _____

NOTARIZATION

THE STATE OF _____)
)
COUNTY OF _____)

BEFORE ME, the undersigned notary public on this day personally appeared _____, on behalf of _____ (Company), who, being duly sworn, stated under oath that he/she has read the foregoing verification required by Texas Government Code Section 2270.002 and said statements contained therein are true and correct.

SWORN TO AND SUBSCRIBED before me on the_____day of _____, 201__.

_____
NOTARY PUBLIC IN AND
FOR THE STATE OF _____

The following definitions apply to Texas Government Code Section 2270.001:

(1) "Boycott Israel" means refusing to deal with, terminating business activities with, or otherwise taking any action that is intended to penalize, inflict economic harm on, or limit commercial relations specifically with Israel, or with a person or entity doing business in Israel or in an Israeli-controlled territory, but does not include an action made for ordinary business purposes; and

(2) "Company" means a for-profit sole proprietorship, organization, association, corporation, partnership, joint venture, limited partnership, limited liability partnership, or limited liability company, including a wholly owned subsidiary, majority-owned subsidiary, parent company, or affiliate of those entities or business associations that exists to make a profit.

State law requires any firm entering into an agreement or contract with the Authority to complete the foregoing verification. TEX. GOV'T CODE § 2270.002.

AGREEMENT FOR WATER AND SEWER MAINTENANCE PARTS AND SUPPLIES

The **City of Sherman, Texas**, a home-rule municipality ("City"), and _____, a _____ ("Contractor"), hereby enter into this Agreement for water and sewer maintenance parts and supplies ("Agreement"). City and Contractor are sometimes referred to collectively as the "parties" or individually as a "party."

WHEREAS, City issued a Request for Proposal, attached hereto as Exhibit A and incorporated herein for all purposes ("Bid Request"), seeking competitive sealed bids for water and sewer maintenance parts and supplies for the City; and

WHEREAS, Contractor timely submitted a sealed response to the Bid Request, attached hereto as Exhibit B and incorporated herein for all purposes ("Submittal"), seeking to provide such services for City; and

WHEREAS, based on Contractor's representations in response to the Bid Request, including those representations set forth in the Submittal, City has selected Contractor to provide the services sought in the Bid Request under the terms and conditions of this Agreement ("Project").

NOW, THEREFORE, in consideration of the mutual agreements and covenants contained herein and other good and valuable consideration, the receipt and sufficiency of which are hereby acknowledged, the parties agree as follows:

1. Scope of Services.
   Contractor shall provide the services and deliverables that are described in the Agreement Documents (as defined below) and shall furnish all personnel, labor, equipment, supplies and all other items necessary to provide the services and deliverables as specified by the terms and conditions of the Agreement Documents (collectively, "Services").

2. Term.
   The initial term of the Agreement shall be for a period of one (1) year, commencing on the Effective Date (hereinafter defined) of this Agreement ("Initial Term"). City shall have the option to extend this Agreement for four (4) additional terms of one (1) year each (each a "Renewal Term") on the same terms and conditions of this Agreement by giving Contractor written notice of its intent to extend prior to the expiration of the then-current one (1) year term.

3. Compensation.
   In exchange for Contractor's performance of the Services in accordance with the Agreement Document, City agrees to pay Contractor on the basis defined by and in the amounts set forth in the Submittal ("Contractor's Fee").

   City shall pay Contractor within thirty (30) days of receipt of each invoice, unless supporting receipts or other supporting documentation have been requested by City, in which case City shall pay the invoice as soon after receiving the supporting receipts or

documentation as is reasonable; or unless a dispute arises as to any charge(s) contained in the invoice, in which case City shall pay the undisputed amount of the invoice within thirty (30) days of receipt and shall pay the remaining amount, if any, of the invoice after resolution of the dispute as soon after resolution as is reasonable. Notwithstanding anything to the contrary in the Agreement Documents, City shall not be required to pay any invoice submitted by Contractor if Contractor is in breach of this Agreement.

The parties agree that the continuation of this Agreement after the close of any given fiscal year of City, which closes on September 30th of each calendar year, shall be subject to City Council approval. In the event that the City Council does not approve the appropriation of funds for this Agreement, the Agreement shall terminate at the end of the fiscal year for which funds were appropriated, and the parties shall have no further obligations hereunder, except that City shall be obligated to pay monies owed Contractor for services it has provided pursuant to this Agreement through the end of that fiscal year provided that Contractor is not in breach of this Agreement.

4. Agreement Documents.

The "Agreement Documents," as that term is used herein, shall mean and include the following documents, and this Agreement expressly incorporates the same herein by reference for all purposes:

A. This Agreement;

B. The Bid Request, attached hereto as Exhibit A;

C. The Submittal, attached hereto as Exhibit B;

D. City's Insurance Requirements, attached hereto as Exhibit C;

E. Affidavit of No Prohibited Interested, attached hereto as Exhibit D; and

F. Conflict of Interest Questionnaire, attached hereto as Exhibit E.

This Agreement shall incorporate the terms of the Agreement Documents in their entirety. To the extent that Exhibit A, Exhibit B, Exhibit C, Exhibit D or Exhibit E are in conflict with provisions of this Agreement or each other, the provisions of this Agreement, then the provisions of Exhibit A, Exhibit C, Exhibit D, Exhibit E and Exhibit B shall prevail in that order. Should disputes arise as to responsibilities and obligations set forth in the Agreement Documents, City's interpretation and/or decision shall be final and binding.

5. Entire Agreement.

The Agreement Documents contain all representations, understandings, contracts and agreements between the parties regarding the subject matter of this Agreement. The Agreement Documents supersede all oral or written previous and contemporaneous agreements, writings, understandings, representations or contracts between the parties regarding the subject matter of this Agreement. This Agreement in no way modifies or

supersedes any document executed by the parties prior to the Effective Date of this Agreement which does not concern the subject matter of this Agreement. No amendment to the Agreement Documents shall be made except on the written agreement of the parties, which shall not be construed to release either party from any obligation of the Agreement Documents except as specifically provided for in such amendment.

6. Required Insurance.

Contractor shall not start work under this Agreement until Contractor has obtained, at Contractor's expense, all of the insurance specified in, and required by, the Agreement Documents. Contractor shall procure and keep in full force and effect the types and amounts of insurance specified in City's Insurance Requirements, attached hereto as Exhibit C and incorporated herein for all purposes, for and during all aspects and phases of Contractor's work throughout the term of this Agreement at no expense to City. Contractor also shall comply with all other requirements set forth in Exhibit C.

7. No Prohibited Interest; Vendor Disclosure.

Contractor acknowledges and agrees that it is aware of, and will abide by, the no prohibited interest requirement of the City Charter. Contractor shall execute and deliver to City the Affidavit of No Prohibited Interest, attached hereto as Exhibit D and incorporated herein for all purposes, no later than the Effective Date of this Agreement (hereinafter defined). Contractor acknowledges and agrees that the existence of a prohibited interest during the term of this Agreement will render this Agreement voidable. Contractor further acknowledges and agrees that it also is aware of, and will abide by, the vendor disclosure requirements set forth in Chapter 176 of the Texas Local Government Code, as amended. In this connection, Contractor shall execute and deliver to City the Conflict of Interest Questionnaire, Form CIQ, attached hereto as Exhibit E and incorporated herein for all purposes, no later than the Effective Date of this Agreement.

8. Indemnity.

CONTRACTOR HEREBY RELEASES AND SHALL DEFEND, INDEMNIFY AND HOLD HARMLESS CITY AND ITS CITY COUNCIL MEMBERS, OFFICERS, AGENTS, REPRESENTATIVES AND EMPLOYEES (COLLECTIVELY REFERRED TO AS "CITY" FOR PURPOSES OF THIS SECTION) FROM AND AGAINST ALL DAMAGES, INJURIES (WHETHER IN CONTRACT OR IN TORT, INCLUDING PERSONAL INJURY AND DEATH), CLAIMS, PROPERTY DAMAGES (INCLUDING LOSS OF USE), LOSSES, DEMANDS, SUITS, ACTIONS, JUDGMENTS, LIENS, COSTS AND EXPENSES, INCLUDING REASONABLE ATTORNEY'S FEES AND EXPENSES (INCLUDING ATTORNEY'S FEES AND EXPENSES INCURRED IN ENFORCING THIS SECTION), THAT IN WHOLE OR IN PART ARISE OUT OF OR ARE CONNECTED WITH GOODS AND/OR SERVICES PROVIDED BY CONTRACTOR, ITS OFFICERS, AGENTS, REPRESENTATIVES, EMPLOYEES, SUBCONTRACTORS, LICENSEES, INVITEES OR ANY OTHER THIRD PARTIES FOR WHOM CONTRACTOR IS LEGALLY RESPONSIBLE (COLLECTIVELY REFERRED TO AS "CONTRACTOR" FOR PURPOSES OF THIS SECTION) PURSUANT TO THIS AGREEMENT AND/OR THE NEGLIGENT, GROSSLY NEGLIGENT AND/OR INTENTIONAL WRONGFUL ACT AND/OR OMISSION OF CONTRACTOR IN ITS/THEIR PERFORMANCE OF THIS AGREEMENT, REGARDLESS OF THE JOINT OR CONCURRENT NEGLIGENCE OF CITY (COLLECTIVELY, "CLAIMS"). THIS INDEMNIFICATION PROVISION AND THE USE OF THE TERM "CLAIMS" IS ALSO SPECIFICALLY INTENDED TO APPLY TO, BUT IS NOT LIMITED TO, ANY AND ALL CLAIMS, WHETHER CIVIL OR CRIMINAL, BROUGHT AGAINST CITY BY ANY GOVERNMENT AUTHORITY OR AGENCY RELATED TO ANY PERSON PROVIDING SERVICES UNDER THIS

AGREEMENT THAT ARE BASED ON ANY FEDERAL IMMIGRATION LAW AND ANY AND ALL CLAIMS, DEMANDS, DAMAGES, ACTIONS AND CAUSES OF ACTION OF EVERY KIND AND NATURE, KNOWN AND UNKNOWN, EXISTING OR CLAIMED TO EXIST, RELATING TO OR ARISING OUT OF ANY EMPLOYMENT RELATIONSHIP BETWEEN CONTRACTOR AND ITS EMPLOYEES OR SUBCONTRACTORS AS A RESULT OF THAT SUBCONTRACTOR'S OR EMPLOYEE'S EMPLOYMENT AND/OR SEPARATION FROM EMPLOYMENT WITH CONTRACTOR, INCLUDING BUT NOT LIMITED TO ANY DISCRIMINATION CLAIM BASED ON SEX, SEXUAL ORIENTATION OR PREFERENCE, RACE, RELIGION, COLOR, NATIONAL ORIGIN, AGE OR DISABILITY UNDER FEDERAL, STATE OR LOCAL LAW, RULE OR REGULATION, AND/OR ANY CLAIM FOR WRONGFUL TERMINATION, BACK PAY, FUTURE WAGE LOSS, OVERTIME PAY, EMPLOYEE BENEFITS, INJURY SUBJECT TO RELIEF UNDER THE WORKERS' COMPENSATION ACT OR WOULD BE SUBJECT TO RELIEF UNDER ANY POLICY FOR WORKERS COMPENSATION INSURANCE, AND ANY OTHER CLAIM, WHETHER IN TORT, CONTRACT OR OTHERWISE.

IN ITS SOLE DISCRETION, CITY SHALL HAVE THE RIGHT TO APPROVE OR SELECT DEFENSE COUNSEL TO BE RETAINED BY CONTRACTOR IN FULFILLING ITS OBLIGATION HEREUNDER TO DEFEND AND INDEMNIFY CITY, UNLESS SUCH RIGHT IS EXPRESSLY WAIVED BY CITY IN WRITING. CITY RESERVES THE RIGHT TO PROVIDE A PORTION OR ALL OF ITS OWN DEFENSE; HOWEVER, CITY IS UNDER NO OBLIGATION TO DO SO. ANY SUCH ACTION BY CITY IS NOT TO BE CONSTRUED AS A WAIVER OF CONTRACTOR'S OBLIGATION TO DEFEND CITY OR AS A WAIVER OF CONTRACTOR'S OBLIGATION TO INDEMNIFY CITY PURSUANT TO THIS AGREEMENT. CONTRACTOR SHALL RETAIN CITY-APPROVED DEFENSE COUNSEL WITHIN SEVEN (7) BUSINESS DAYS OF CITY'S WRITTEN NOTICE THAT CITY IS INVOKING ITS RIGHT TO DEFENSE OR INDEMNIFICATION UNDER THIS AGREEMENT. IF CONTRACTOR FAILS TO RETAIN COUNSEL WITHIN SUCH TIME PERIOD, CITY SHALL HAVE THE RIGHT TO RETAIN DEFENSE COUNSEL ON ITS OWN BEHALF, AND CONTRACTOR SHALL BE LIABLE FOR ALL COSTS INCURRED BY CITY.

THE RIGHTS AND OBLIGATIONS CREATED BY THIS SECTION SHALL SURVIVE TERMINATION OF THIS AGREEMENT.

9. Liability.

To the fullest extent permitted by law, Contractor shall be fully and solely responsible and liable for its own acts and omissions, including those of its officers, agents, representatives, employees, subcontractors, licensees, invitees and all other parties performing services for or on behalf of Contractor under this Agreement, and for any and all damage to Contractor's equipment and other property. City assumes no such responsibility or liability. City shall have no such responsibility or liability to either Contractor or its officers, agents, representatives, employees, subcontractors, licensees, invitees or other persons.

10. Compliance with Laws; Standard of Care.

Contractor shall comply with all federal, state and local laws, statutes, ordinances, regulations and policies, as they exist, may be amended or in the future arising, applicable to Contractor and its work. Contractor shall ensure that its officers, agents, representatives, employees, subcontractors, licensees, invitees and other parties performing services for or on behalf of Contractor under this Agreement comply with all applicable laws, statutes, ordinances, regulations and policies. If Contractor observes or is notified that the work under this Agreement is at variance with applicable laws, statutes, ordinances, regulations

and policies, Contractor shall immediately notify City in writing. Contractor shall perform the Services in accordance with the prevailing standard of care by exercising the skill and care ordinarily utilized by professionals performing the same or similar services under the same or similar circumstances in the State of Texas.

11. Termination.

City is entitled to terminate this Agreement at any time for any reason or for no reason by giving Contractor at least thirty (30) days' prior written notice of the termination date.

City is entitled to terminate this Agreement immediately on breach of any term or provision of the Agreement Documents by Contractor. If at any time during the term of this Agreement, Contractor shall fail to commence the work in accordance with the provisions of the Agreement Documents or fail to diligently perform the Services in an efficient, timely and careful manner and in strict accordance with the provisions of the Agreement Documents, then City shall have the right to terminate this Agreement and complete the work in any manner it deems desirable, including engaging the services of other parties, if Contractor does not cure any such default after five (5) days written notice thereof. Any such act by City shall not be deemed a waiver of any other right or remedy of City.

If after exercising any remedy provided herein, the cost to City of the performance of the balance of the work under this Agreement is in excess of that part of the Contractor's Fee which has not yet been paid to Contractor hereunder, Contractor shall be liable for and shall reimburse City for such excess, without waiver of any other right or remedy of City.

The rights and remedies provided by this Agreement are cumulative, and the use of any one right or remedy by either party shall not preclude or waive its rights to use any or all other remedies. These rights and remedies are given in addition to any other rights the parties may have by law, statute, ordinance or otherwise.

12. Authority to Execute.

Each party represents and warrants to the other that it has the full power and authority to enter into and fulfill the obligations of this Agreement. The respective signatories to this Agreement, by affixing their signatures hereto, warrant and represent that they have the authority to bind their respective parties as duly authorized representatives thereof.

13. Assignment.

Contractor agrees that neither this Agreement nor the work to be performed hereunder will be assigned or sublet without the prior written consent of City. Contractor further agrees that the assignment or subletting of any portion or feature of the work or materials required in the performance of this Agreement shall not relieve Contractor of its full obligations to City as provided by this Agreement. All such approved work performed by assignment or subletting shall be billed through Contractor, and there shall be no third-party billing.

14. No Waiver of Immunity.

The parties acknowledge and agree that, in executing and performing this Agreement, City has not waived, nor shall be deemed to have waived, any defense or immunity, including governmental, sovereign and official immunity, that would otherwise be available to it against claims arising in the exercise of governmental powers and functions. By entering into this Agreement, the parties do not create any obligations, express or implied, other than those set forth herein.

15. Savings/Severability.
In the event that a term, condition or provision of this Agreement is determined to be invalid, illegal, void, unenforceable or unlawful by a court of competent jurisdiction, then that term, condition or provision shall be deleted and the remainder of the Agreement shall remain in full force and effect as if such invalid, illegal, void, unenforceable or unlawful provision had never been included in this Agreement.

16. Consideration.
This Agreement is executed by the parties without coercion or duress and for substantial consideration, the sufficiency of which is forever confessed.

17. Attorneys' Fees.
If either party files any action or brings any proceeding against the other arising from this Agreement, then as between City and Contractor, the prevailing party shall be entitled to recover as an element of its costs of suit, and not as damages, reasonable and necessary attorneys' fees and litigation expenses both at trial and on appeal, subject to the limitations set forth in the TEX. LOC. GOV'T CODE § 271.153, as it exists or may be amended, if applicable.

18. Governing Law; Venue.
The laws of the State of Texas shall govern the interpretation, validity, performance and enforcement of this Agreement, without regard to conflict of law principles. This Agreement is performable in Grayson County, Texas, and the exclusive venue for any action arising out of this Agreement shall be a court of appropriate jurisdiction in Grayson County, Texas.

19. Binding Effect.
This Agreement shall be binding on and inure to the benefit of the parties and their respective heirs, executors, administrators, legal representatives, successors and assigns when permitted by this Agreement.

20. No Waiver.
Waiver by either party of any breach of this Agreement, or the failure of either party to enforce any of the provisions of this Agreement, at any time, shall not in any way affect, limit, or waive such party's right thereafter to enforce and compel strict compliance.

21. Headings.
The headings of the various sections of this Agreement are included solely for convenience of reference and are not to be full or accurate descriptions of the content thereof.

22. Indemnity.
The parties agree that the indemnity provision set forth in Section 8 herein is conspicuous and the parties have read and understood the same.

23. Notice.
Any notice provided or permitted to be given under this Agreement must be in writing and may be served by depositing the same in the United States Mail, addressed to the party to be notified, postage pre-paid and registered or certified with return receipt requested; by facsimile; by electronic mail, with documentation evidencing the addressee's receipt thereof; or by delivering the same in person to such party a via hand-delivery service, or to any courier service that provides a return receipt showing the date of actual delivery of the same to the addressee thereof. Notice given in accordance herewith shall be effective on receipt at the address of the addressee. For purposes of notification, the addresses of the parties shall be as follows:

If to Contractor, to: _____
Attn:_____
Address:_____
_____
Telephone:_____
Facsimile:_____
Email:_____

If to City, to: City of Sherman
Attn: Robby Hefton, City Manager
220 W. Mulberry Street
Sherman, Texas 75090
Telephone: (903) 892-7201
Facsimile: (903) 892-7355
Email: robbyh@cityofsherman.com

With a copy to:
Abernathy, Roeder, Boyd & Hullett, P.C.
Attn.: Ryan D. Pittman
1700 Redbud Blvd., Suite 300
McKinney, Texas 75069
Telephone: (214) 544-4000
Facsimile: (214) 544-4054
Email: rpittman@abernathy-law.com

24. Representations.
Each party states that they have carefully read this Agreement, know the contents hereof, have consulted with an attorney of their choice regarding the meaning and effect hereof and is signing the same solely of their own judgment.

25. Independent Contractor.
Contractor covenants and agrees that Contractor is an independent contractor and not an officer, agent, servant or employee of City; that Contractor shall have exclusive control of and exclusive right to control the details of the work performed hereunder and all persons performing the same; that the doctrine of respondent superior shall not apply as between City and Contractor, its officers, agents, employees, contractors, subcontractors and consultants; and that nothing herein shall be construed as creating a partnership or joint enterprise between City and Contractor.

26. Incorporation of Recitals.
The representations, covenants and recitations set forth in the foregoing recitals of this Agreement are true and correct and are hereby incorporated into the body of this Agreement and adopted as findings of City and the authorized representative of Contractor.

27. Reference to Contractor.
When referring to "Contractor" herein, this Agreement shall refer to and be binding upon Contractor, and its officers, directors, partners, employees, representatives, contractors, subcontractors, licensees, invitees, agents, successors, assignees (as authorized herein), vendors, grantees, trustees, legal representatives and/or any other third parties for whom Contractor is legally responsible.

28. Reference to City.
When referring to "City" herein, this Agreement shall refer to and be binding upon City, its Council Members, officers, agents, representatives, employees and/or any other authorized third parties for whom City is legally responsible.

29. Miscellaneous Drafting Provisions.
This Agreement shall be deemed drafted equally by all parties hereto. The language of all parts of this Agreement shall be construed as a whole according to its fair meaning, and any presumption or principle that the language herein is to be construed against any party shall not apply. Headings in this Agreement are for the convenience of the parties and are not intended to be used in construing this document.

30. Multiple Counterparts.
This Agreement may be executed in a number of identical counterparts, each of which shall be deemed an original for all purposes. An electronic mail and/or facsimile signature will also be deemed to constitute an original if properly executed and delivered to the other party.

IN WITNESS WHEREOF, the parties have executed this Agreement and caused this Agreement to be effective when all the parties have signed it. The date this Agreement is signed by the last party to sign it (as indicated by the date associated with that party's signature below) will be deemed the effective date of this Agreement ("Effective Date").

CITY OF SHERMAN, TEXAS,
a home-rule municipality

By: _____
Robby Hefton, City Manager
Date: _____

ATTEST:

_____
Linda Ashby, City Clerk

_____
a Texas corporation

By: _____
Printed Name: _____
Title: _____
Date: _____

STATE OF TEXAS §
§
COUNTY OF GRAYSON §

BEFORE ME, the undersigned authority, on this day personally appeared **Robby Hefton**, known to me to be one of the persons whose names are subscribed to the foregoing instrument; he acknowledged to me he is the City Manager and duly authorized representative for the **City of Sherman, Texas** and he executed said instrument for the purposes and consideration therein expressed.

GIVEN UNDER MY HAND AND SEAL OF OFFICE this _____ day of _____, 202_.

_____
Notary Public in and for the State of Texas
My Commission Expires:_____

STATE OF TEXAS §
§
COUNTY OF _____ §

BEFORE ME, the undersigned authority, on this day personally appeared **_____,** known to me to be one of the persons whose names are subscribed to the foregoing instrument; he/she acknowledged to me he/she is the _____ (title) and duly authorized representative for _____, a Texas corporation, and that he/she executed said instrument for the purposes and consideration therein expressed.

GIVEN UNDER MY HAND AND SEAL OF OFFICE this _____ day of _____, 202_.

_____
Notary Public in and for the State of Texas
My Commission Expires:_____

Exhibit A
Bid Request

44 text here

Sherman
CLASSIC TOWN. BROAD HORIZON.

City of Sherman
PO Box 1106
Sherman, TX 75091-1106

Request for Proposals

for

WATER & SEWER PARTS AND SUPPLIES RFP No. 2024-10

Publication Dates: Sunday March 10, 2024
Sunday March 17, 2024

TABLE OF CONTENTS

Document	Page #
Instructions to Bidders	3
Notice to Bidders	4
General Conditions	6
Specifications	12
• Evaluation Process	13
Contact Reference	17
Exhibit C: City's Insurance Requirements	18
Exhibit D: Affidavit of No Prohibited Interest	20
Exhibit E: Conflict of Interest Questionnaire	21
Texas Ethics Commission Form 1295 & Verification 2290	22

CITY OF SHERMAN, TEXAS

FINANCE DEPARTMENT

REQUEST FOR PROPOSAL - BID NO. 2024-10; Water & Sewer Parts and Supplies

The enclosed **REQUEST FOR PROPOSAL** (RFP) and accompanying **SPECIFICATIONS** are for your convenience in bidding the enclosed referenced **Water & Sewer Parts and Supplies** for the City of Sherman.

Questions may be addressed to the Finance Department at the address listed below. The bids will be opened at **3:00 p.m. on Thursday, March 28, 2024,** at the following address:

City of Sherman – Finance Department
Municipal Building
405 N. Rusk Street
Sherman, TX
903-892-7215
craigl@cityofsherman.com

Bids may be submitted by mail to the following address:

City of Sherman
Finance Dept. – RFP for Water & Sewer Parts and Supplies - No. 2024-10

P.O. Box 1106
Sherman, TX 75091-1106

OR

Electronically at www.publicpurchase.com

OR

By delivery at the Municipal Building address listed above.

NOTICE TO BIDDERS

Bids will be received by the City of Sherman, Sherman, Texas, at the Finance Department, Attention: Craig Long, Sherman Municipal Building, 405 N. Rusk, Sherman, Texas 75091 until the hour **3:00 PM on the 28th day of March, 2024,** at which time bids duly delivered and submitted will be considered for supplying the following:

BID NO. 2024-10 – Water & Sewer Parts and Supplies

The award is intended to be included on the agenda of a regularly scheduled meeting of the City Council at the following address:

City Council Chambers
City Hall
220 W. Mulberry
Sherman, TX

Each bid delivered to the City shall be sealed and clearly marked "Water & Sewer Parts and Supplies 2024-10" on the exterior of the bid. Electronic submittals may only be made through Public Purchase at https://www.publicpurchase.com. No email or faxed bids will be accepted. Each bid shall be **manually signed and dated by a person having the authority to bind the firm in a contract. Bids that are not signed and dated will be rejected.**

Please note that all bids **must be received at the designated location or through Public Purchase by the deadline shown**. Bids received after the deadline will not be considered for the award of the contract, and shall be considered void and unacceptable. The Opening is scheduled for **3:00 p.m., Thursday, March 28, 2024,** at which time the sealed bids will be opened.

Any bid received after stated closing time will be returned unopened. If bids are sent by mail to the Finance Department, the bidder shall be responsible for actual delivery of the bid before the advertised date and hour for opening of bids. If the mail is delayed by the postal service, courier service, or an ISP (Internet Service Provider), beyond the date and hour set for the bid opening, bids thus delayed will not be considered.

The City of Sherman will receive sealed bids for: **Water & Sewer Parts and Supplies.**

Bidders should carefully examine all terms, conditions, specifications and related documents. Should a bidder find discrepancies in or omissions from the specifications or related documents, or should there be doubt as to their meaning, the City of Sherman Finance Department should be notified immediately for clarification prior to submitting the bid. In the event of any conflict between the terms and conditions of these requirements and the specifications, the specifications shall govern. In the event of any conflict of interpretation of any part of this overall document, the City of Sherman's interpretation shall govern.

Information concerning the bid specifications or bid process/procedures may be submitted in writing to Craig Long, Budget Analyst at craigl@cityofsherman.com, or via phone at (903) 892-7215.

Until the final awarding by the City of Sherman, said City reserves the right to reject any and/or all bids, to waive technicalities, to re-advertise, and proceed otherwise when the best interests of said City will be realized hereby.

[Rest of Page Intentionally Left Blank]

CITY OF SHERMAN
GENERAL CONDITIONS

ADDENDA

It is the responsibility of the vendor to check for addenda. Addenda will be posted to: www.ci.sherman.tx.us and to www.publicpurchase.com.

ANNUAL CONTRACT FUNDING

The city operates on a fiscal year that ends on September 30th. Because state law mandates that a municipality may not commit funds beyond a fiscal year, this bid is subject to cancellation if funds for this commodity are not approved in the next fiscal year.

ASSIGNMENT OF BID/CONTRACT

The successful bidder may not assign their rights and duties under and award without the written consent of the City. Such consent shall not relieve the assignor of liability in event of default by their assignee.

BID CONSIDERATION / TABULATION

Until final award of the Contract, the city reserves the right to reject any or all bids, to waive technicalities, and to re-advertise for new bids, or proposed to do the work otherwise in the best interests of the City. Please refer to the **EVALUATION PROCESS & BEST VALUE EVALUATION CRITERIA** sections for additional information.

BID SUBMISSION

Bids may be submitted in person, by mail, or electronically at www.publicpurchase.com.

- Submit bids via mail to PO Box 1106, Sherman, TX 75091-1106.
- To submit a bid via mail, all documents must be returned and an original signature provided on the proposal to bidders sheet.
- Bids will not be accepted without a signature.
- Bids submitted by email or fax will not be accepted.
- The City is not responsible for mail service. See page 4, paragraph 2 of the Notice to Bidders.

BRAND NAMES

If items for which bids have been called for have been identified by a "brand name or equal" description, such identification is intended to be descriptive, but not restrictive, and is to indicate the quality and characteristics of products that will be satisfactory. Bids offering "equal" products will be considered for award if such products are clearly identified in the bids and are determined by the City to be equal in all material respects to the brand name products referenced. **Unless the bidder clearly indicates in their bid that they are offering an "equal product", their bid shall be considered as offering a brand name product referenced in the Proposal Schedule.**

CHANGES OR ALTERATIONS

No part of this bid may be changed/altered in any way. Vendors must submit written requests to change any specifications/conditions with their proposal. ***Changes made without submission of a written request to this bid will result in disqualification.***

COMPLETING INFORMATION

Bidder must fill in all information asked for in the blanks provided under each item. Failure to comply may result in rejection of the Bid at the City's option.

CONTRACT CLAUSE

All bidders understand and agree that the vendor's bid response will become a legally binding contract upon acceptance in writing by the City. This contract may be superseded only if replaced with a more extensive contract that is agreed to by both parties.

DEFAULT

In case of default of the successful bidder, the city of Sherman may procure the articles from other sources and hold the bidder responsible for any excess cost occasioned thereby.

DELIVERY

The City reserves the right to demand bond or penalty to guarantee delivery by the date indicated. If order is given and the Bidder fails to furnish the materials by the guaranteed date, the City reserves the right to cancel the order without liability on its part. All prices are to be F.O.B. Sherman, Texas all freight prepaid.

DELIVERY DATE

Delivery date is an important factor to the City and may be required to be a part of each bid. The city of Sherman considers delivery time to be that period elapsing from the time the individual order is placed until that order or work thereunder is received by the City at the specified delivery location. The delivery date indicates a guaranteed delivery at Sherman, Texas. Failure of the bidder to meet guaranteed delivery dates or service performance could affect future City orders.

Whenever the Contractor encounters any difficulty which is delaying or threatens to delay timely performance (including actual or potential labor disputes), the Contractor shall immediately give notice thereof in writing to the City, stating all relevant information with respect thereto. Such notice shall not in any way constitute a basis for an extension of the delivery or performance schedule or be construed as a waiver by the City of any rights or remedies to which it is entitled by law or pursuant to provisions herein. Failure to give such notice, however, may be grounds for denial of any request for an extension of the delivery or performance schedule because of such delivery.

INDEMNIFICATION

In case any action in court is brought against the Owner, or any officer or agent of the Owner, for the failure, omission, or neglect of the vendor to perform any of the covenants, acts, matters, or things by this contract undertaken; or for injury or damage caused by the alleged negligence of the

vendor or his subcontractors or his or their agents, or in connection with any claim based on lawful demands of subcontractors, workmen, materialmen, or suppliers the vendor shall indemnify and

save harmless the Owner and his officers and agents, from all losses, damages, costs, expenses, judgments, or decrees arising out of such action.

INSURANCE

Deductibles, of any type, are the responsibility of the vendor/contractor.

MISCELLANEOUS

Except as to any supplies or components which the specifications provide need not be new, all supplies and components to be provided under this contract shall be new (not used or reconditioned, and not of such age or so deteriorated as to impair their usefulness or safety), of current production and of the most suitable grade for the purpose intended. If at any time during the performance of this contract the Contractor believes that the furnishing of supplies or components which are not new is necessary or desirable, they shall notify the City immediately, in writing, including the reasons therefore and proposing any consideration which will flow to the City if authorization to use supplies or components is granted.

The city of Sherman supports a recycling program. Recycled materials are acceptable and will be considered for award. The City desires to use recycled products when a comparable material/product is available. If your company distributes products made of recycled materials please submit an alternate bid for the items requested. All recycled products should meet the minimum standards established in the bid specifications provided. State any exceptions: costs, warranties and percentage of recycle materials used in the manufacture of the material/product. The City will determine the acceptability of the materials/product bid as an alternate.

Successful bidder(s) agrees to extend prices to all entities that have entered into or will enter into joint purchasing inter-local cooperation agreements with the city of Sherman. As such, the city of Sherman has executed an inter-local agreement with certain other governmental entities authorizing participation in a cooperative purchasing program. The successful vendor may be asked to provide product/services, based upon the bid price, to any other participant in the forum.

The City operates on a fiscal year that ends on September 30th. State law mandates that a municipality may not commit funds beyond a fiscal year; this bid is subject to cancellation if funds for this commodity are not approved in the next fiscal year.

PAYMENT TERMS & CONDITIONS

All bids shall specify terms and conditions of payment, which will be considered as part of, but not control, the award of bid. City review, inspection, and processing procedures ordinarily require thirty (30) days after receipt of invoice, materials or service. Bids which call for payment before 30 days from receipt of invoice, or cash discounts given on such payment, will be considered only if in the opinion of the City the review, inspection and processing procedures can be completed as to the specific purchases within the specified time.

It is the intention of the city of Sherman to make payment on completed orders within thirty (30) days

of receiving invoicing unless unusual circumstances arise. Invoices shall be fully documented as to labor, materials and equipment provided.

PROVISIONAL CLAUSES

The city of Sherman will not enter into any contract where the cost is provisional upon such clauses as are known as "escalator" or "cost-plus" clauses.

REJECTION OF BIDS

The City reserves the right to reject any or all bids or to waive technicalities at its option when in the best interests of said City. Bids will be considered irregular if they show any omissions, alteration of form, additions, or conditions not called for, unauthorized alternate bids or irregularities of any kind. However, the City reserves the right to waive any irregularities and to make the award in the best interests of the City.

The City reserves the right to reject any or all bids, and all bids submitted are subject to this reservation. Bids may be rejected, among other reasons, for any of the following specific reasons:

- Bids received after the time limit for receiving bids as stated in the advertisement.
- Proposal containing any irregularities.
- Bids submitted via fax or email.
- Unbalanced value of any items.

Bidders may be disqualified and their bids not considered, among other reasons, for any of the following specific reasons:

- Reason for believing collusion exists among the Bidders.
- Reasonable grounds for believing that any Bidder is interested in more than one Proposal for the work contemplated.
- The Bidder being interested in any litigation against the City.
- The Bidder being in arrears on any existing contract or having defaulted on a previous contract.
- Lack of competency as revealed by a financial statement, experience and equipment, questionnaires, etc.
- Uncompleted work, which in the judgment of the City will prevent or hinder the prompt completion of additional work if awarded.

REQUEST FOR NON-CONSIDERATION

Bids deposited with the City cannot be withdrawn prior to the time set for opening bids. Request for non-consideration of bids must be made in writing to the Finance Department and received by the City prior to the time set for opening bids. After other bids are opened and publicly read, the Proposal for which non-consideration is properly requested may be returned unopened. The Proposal may not be withdrawn after the bids have been opened, and the Bidder, in submitting the same, warrants and guarantees that this bid has been carefully reviewed and checked and that it is in all things true and accurate and free of mistakes and that such bid will not and cannot be withdrawn because of any mistake committed by the Bidder.

SALES TAX

The total for each bid submitted must include any applicable taxes. Although the City is exempt from most City, State, or Federal taxes, this is not true in all cases. It is suggested that taxes, if any, be separately identified, itemized, and stated on each bid. The City cannot determine for the bidder whether or not the bid is taxable to the City. The bidder through the bidder's attorney or tax consultant must make such determination. Bills submitted for taxes after the bids are awarded will not be honored.

PROPOSAL DEFINITIONS:

"City" is the City of Sherman, Texas.
"Bidder" is an individual or business submitting a bid or proposal to the City of Sherman.
"Independent contractor" or "contractor" is one who contracts to perform work or furnish materials in accordance with a contract.

I. PROPOSAL TERMS

A. The City of Sherman reserves the right to reject any and all proposals received as a result of this RFP. If a proposal is selected, it will be the most advantageous regarding price, quality of service, the independent contractor's qualifications and capabilities to provide the specified service, and other factors which the City of Sherman may consider. The City does not intend to award a contract fully on the basis of any response made to the proposal: the City reserves the right to consider proposals for modifications at any time before a contract would be awarded; and negotiations would be undertaken with the independent contractor whose proposal is deemed to best meet the City's specifications and needs.

B. Proposals must be signed by an official authorized to bind the independent contractor to its provisions for a period of at least ninety (90) days. Failure of the successful bidder to accept the obligation of the contract may result in the cancellation of any award.

C. In the event it becomes necessary to revise any part of the RFP, addenda will be provided. The deadline for submission of proposals may be adjusted to allow for revisions. To be considered, the entire proposal document, with any amendments, should be returned by the specified date, time and method identified on page 2 of this document.

D. Proposals should be prepared simply and economically providing a straightforward, concise description of the independent contractor's ability to meet the requirements of the RFP. Proposals shall be written in ink or typewritten. No erasures are permitted. Mistakes may be crossed out and corrected and must be initialed in ink by the person signing the proposal.

E. The price quotations from the contractor stated in this proposal will not be subject to any price increase from the closing date of this RFP to the mutually agreed to date of contract.

F. The City of Sherman reserves the right to increase or decrease the amount of janitorial services based upon annual budget constraints with fifteen (15) days' notice.

G. The City of Sherman reserves the right to award a separate contract to separate vendors for each item/group or to award one contract for the entire RFP.

[REST OF THIS PAGE INTENTIONALLY LEFT BLANK

Specifications

Resilient Seat Wedge Gate Valves

1. Valve shall conform to **AWWA C509-87**, Standard for resilient Seated Gate Valves.

2. Wedge shall be constructed of cast or ductile iron, fully encapsulated in synthetic rubber.

3. Wedge rubber shall be molded in place and bonded to the iron portion, and shall not be mechanically attached with screws, rivets, or similar fasteners.

4. Wedge shall seat against seating surface arranged symmetrically about the center line of the operation stem, so that seating is equally effective regardless of the direction of pressure unbalance across the wedge.

5. All seating surfaces in the body shall be inclined to be vertical at a minimum angle of 32 degrees (when stem is in a vertical position) to eliminate abrasive wear of rubber sealing surfaces.

6. Stem shall be sealed by at least two O-rings; all stem seals shall be replaceable with valve fully open and wile subject to full rated pressure.

7. Waterway shall be smooth and shall have no depressions or cavities in seat area where foreign material can be lodged and prevent closure or sealing.

8. Valve body and bonnet shall be epoxy coated, inside and out, with fusion bonded epoxy. Coating shall conform to AWWA C550-90, Standard for Protective Interior Coatings for Valves and Hydrants.

9. Gate valves shall be **Mueller A2360, AFC 500, AVK 25/00, or M & H style 7000.**

FLANGED X M.J. GATE VALVE			
SIZE	ESTIMATED USAGE	UNIT PRICE	EXTENDED PRICE
2"	6	$ 559.50	$ 8,392.50
4"	15	$ 559.50	$ 18,687.50
6"	25	$ 747.50	$ 17,512.50
8"	15	$ 1,167.50	$ 17,512.50
10"	2	$ 1,854.50	$ 3,709.00
12"	4	$ 2,239.50	$ 8,958.00
14"	1	$ 7,102.53	$ 7,102.53
16"	1	$ 7,704.00	$ 7,704.00
18"	1	$ 12,609.80	$ 12,609.80
20"	1	$ 15,301.26	$ 15,301.26
24"	1	$ 21,532.90	$ 21,537.90
TOTAL			$ 139,027.49

M.J. GATE VALVES			
SIZE	ESTIMATED USAGE	UNIT PRICE	EXTENDED PRICE
2"	20	$ 341.95	$ 6,829.00
4"	20	$ 539.60	$ 10,792.00
6"	50	$ 747.50	$ 37,375.00
8"	10	$ 1,189.50	$ 11,895.00
10"	10	$ 1,854.50	$ 18,545.00
12"	10	$ 2,346.50	$ 23,465.00
14"	1	$ 7,102.53	$ 7,102.53
16"	1	$ 7,704.00	$ 7,704.00
18"	1	$ 12,609.80	$ 12,609.80
20"	1	$ 15,144.00	$ 15,144.00
24"	1	$ 21,532.90	$ 21,532.90
TOTAL			$ 172,994.23

FLANGED X FLANGE GATE VALVE			
SIZE	ESTIMATED USAGE	UNIT PRICE	EXTENDED PRICE
4"	2	$ 580.50	$ 1,161.00
6"	2	$ 775.50	$ 1,551.00
8"	2	$ 1,212.50	$ 2,425.00
10"	2	$ 1,925.50	$ 3,851.00
12"	2	$ 2,325.50	$ 4,651.00
16"	2	$ 7,704.00	$ 15,408.00
18"	2	$ 12,609.80	$ 25,219.60
20"	2	$ 15,144.00	$ 30,288.00
24"	2	$ 21,532.90	$ 43,065.80
TOTAL			$ 127,620.40

FLANGE BOLTS & GASKETS - STAINLESS STEEL			
SIZE	ESTIMATED USAGE	UNIT PRICE	EXTENDED PRICE
4"	15	$ 22.11	$ 331.65
6"	25	$ 28.32	$ 708.00
8"	15	$ 40.11	$ 601.65
10"	5	$ 57.55	$ 287.75
12"	5	$ 69.74	$ 348.70
TOTAL			$ 2,277.75

Butterfly Valves

Butterfly valves and operators shall conform to AWWA standards for rubber-seated butterfly valves, AWWA Standard C504, and to these specifications:

1. Type of body shall be short body, flanged or mechanical joint.
2. Body material shall be cast iron or ductile iron.
3. Class shall be specified on the plans or contract specifications.
4. Shaft shall be type 304 or 316 stainless steel.
5. Flanged holes shall be drilled to full size.
6. Valve seat shall be natural rubber or Buna-N and polished stainless steel, type 304 or 316, 90-degree seating angle only, with a 360-degree, uninterrupted seating surface.
7. Shaft seals shall be standard split-V packing or double O-ring seal cartridges.
8. Disc shall be ductile iron, cast iron, or fabricated steel.
9. Operating nuts shall be ductile iron.

M.J. x M.J. BUTTERFLY VALVE			
SIZE	ESTIMATED USAGE	UNIT PRICE	EXTENDED PRICE
12"	1	$ 1,740.56	$ 1,740.56
14"	1	$ 2,619.90	$ 2,619.90
16"	1	$ 3,110.71	$ 3,110.71
18"	1	$ 3,495.41	$ 3,495.41
20"	1	$ 4,702.55	$ 4,702.55
24"	1	$ 6,526.53	$ 6,526.53
TOTAL			$ 22,195.66

FLANGED x M.J. BUTTERFLY VALVE			
SIZE	ESTIMATED USAGE	UNIT PRICE	EXTENDED PRICE
12"	1	$ 1,740.56	$ 1,740.56
14"	1	$ 2,619.90	$ 2,619.90
16"	1	$ 3,110.71	$ 3,110.71
18"	1	$ 3,495.41	$ 3,495.41
20"	1	$ 4,702.55	$ 4,702.55
24"	1	$ 6,526.53	$ 6,526.53
TOTAL			$ 22,195.66

FLANGED x FLANGED BUTTERFLY VALVE			
SIZE	ESTIMATED USAGE	UNIT PRICE	EXTENDED PRICE
12"	1	$ 1,740.56	$ 1,740.56
14"	1	$ 2,619.90	$ 2,619.90
16"	1	$ 3,110.71	$ 3,110.71
18"	1	$ 3,495.41	$ 3,495.41
20"	1	$ 4,702.55	$ 4,702.55
24"	1	$ 6,526.53	$ 6,526.53
TOTAL			$ 22,195.66

Ductile Iron Mechanical Joint Fittings

Fittings shall be cast from ductile iron in accordance with **ANSI/AWWA C153/A21.53** with mechanical joint bells. Glands, bolts, nuts, and gaskets shall be in accordance with requirements of **ANSI/AWWA C153/A21.53** Fittings shall be listed by an approved certifying agency as conforming to the requirements of **ANSI/NSF 61.** The working pressure rating shall be 350 psi. Fittings shall have an asphaltic outside coating in accordance with **ANSI/AWWA C153/A21.53.** Fittings shall be cement lined and seal coated in accordance with **ANSI/AWWA C104/A21.4** and listed by an approved certifying agency as conforming to the requirements of **ANSI/NSF 61.**

Type text here

M.J. CAPS			
SIZE	ESTIMATED USAGE	UNIT PRICE	EXTENDED PRICE
2"	5	$ 79.34	$ 396.70
4"	5	$ 45.01	$ 225.05
6"	10	$ 76.29	$ 762.90
8"	5	$ 118.25	$ 591.24
10"	6	$ 135.79	$ 814.76
12"	6	$ 172.41	$ 1,034.47
TOTAL			$ 3,825.12

M.J. SOLID SLEEVE			
SIZE	ESTIMATED USAGE	UNIT PRICE	EXTENDED PRICE
4"	5	$ 87.73	$ 438.66
6"	20	$ 130.45	$ 2,609.07
8"	10	$ 169.36	$ 1,693.61
10"	6	$ 252.55	$ 1,515.28
12"	6	$ 341.01	$ 2,046.06
14"	2	$ 67.40	$ 134.80
16"	2	$ 854.43	$ 1,708.87
18"	2	$ 1,130.60	$ 2,261.20
20"	2	$ 1,367.86	$ 2,735.71
24"	2	$ 1,888.14	$ 3,776.29
TOTAL			$ 18,919.55

M.J. PLUGS			
SIZE	ESTIMATED USAGE	UNIT PRICE	EXTENDED PRICE
2"	5	$ 66.37	$ 331.86
4"	5	$ 57.22	$ 286.08
6"	10	$ 89.26	$ 892.58
8"	5	$ 126.64	$ 633.20
10"	6	$ 162.49	$ 974.97
12"	6	$ 263.96	$ 1,583.75
TOTAL			$ 4,702.43

	M.J. BENDS			
SIZE	BEND	ESTIMATED USAGE	UNIT PRICE	EXTENDED PRICE
2"	90	4	$ 218.19	$ 872.74
4"	90	4	$ 94.60	$ 378.39
6"	90	20	$ 148.76	$ 2,975.26
8"	90	10	$ 215.90	$ 2,158.97
10"	90	6	$ 375.34	$ 2,252.04
12"	90	2	$ 542.41	$ 1,084.82
14"	90	1	$ 979.55	$ 979.55
16"	90	1	$ 1,237.40	$ 1,237.40
18"	90	1	$ 1,690.56	$ 1,690.56
20"	90	1	$ 2,262.72	$ 2,262.72
24"	90	1	$ 5,151.01	$ 5,151.01
2"	45	4	$ 198.35	$ 793.40
4"	45	4	$ 78.58	$ 314.31
6"	45	8	$ 122.06	$ 976.49
8"	45	6	$ 172.41	$ 1,034.47
10"	45	4	$ 249.46	$ 997.86
12"	45	4	$ 431.03	$ 1,724.12
14"	45	1	$ 761.36	$ 761.36
16"	45	1	$ 951.32	$ 951.32
18"	45	1	$ 1,254.95	$ 1,254.95
20"	45	1	$ 1,481.53	$ 1,481.53
24"	45	1	$ 2,146.00	$ 2,146.00
TOTAL				$ 33,479.28

M.J. REDUCERS			
SIZE	ESTIMATED USAGE	UNIT PRICE	EXTENDED PRICE
4" x 2"	10	$ 193.77	$ 1,937.73
6" x 2"	4	$ 307.44	$ 1,229.77
6" x 4"	15	$ 86.97	$ 1,304.54
8" x 4"	1	$ 132.74	$ 132.74
8" x 6"	1	$ 141.90	$ 141.90
10" x 4"	1	$ 245.78	$ 245.78
10" x 6"	2	$ 178.52	$ 357.03
10" x 8"	2	$ 199.88	$ 399.75
12" x 4"	1	$ 346.35	$ 346.35
12" x 6"	3	$ 295.24	$ 885.71
12" x 8"	1	$ 306.68	$ 306.68
12" x 10"	1	$ 328.04	$ 328.04
14" x 12"	1	$ 501.22	$ 501.22
16" x 12"	1	$ 714.82	$ 714.82
18" x 12"	1	$ 969.63	$ 969.63
20" x 12"	1	$ 1,083.30	$ 1,083.30
24" x 12"	1	$ 1,735.57	$ 1,735.57
TOTAL			$ 12,620.57

	M.J. BENDS			
SIZE	BEND	ESTIMATED USAGE	UNIT PRICE	EXTENDED PRICE
2"	22 1/2	4	$ 190.87	$ 763.46
4"	22 1/2	4	$ 76.29	$ 305.15
6"	22 1/2	4	$ 111.38	$ 445.53
8"	22 1/2	4	$ 169.36	$ 677.44
10"	22 1/2	4	$ 241.07	$ 964.29
12"	22 1/2	2	$ 366.19	$ 732.37
14"	22 1/2	1	$ 772.04	$ 772.04
16"	22 1/2	1	$ 912.41	$ 912.41
18"	22 1/2	1	$ 1,244.27	$ 1,244.27
20"	22 1/2	1	$ 1,572.31	$ 1,572.31
24"	22 1/2	1	$ 2,069.71	$ 2,069.71
4"	11 1/4	2	$ 68.66	$ 137.32
6"	11 1/4	2	$ 115.20	$ 230.39
8"	11 1/4	2	$ 154.10	$ 308.21
10"	11 1/4	2	$ 251.75	$ 503.51
12"	11 1/4	2	$ 347.11	$ 694.23
14"	11 1/4	1	$ 791.88	$ 791.88
16"	11 1/4	1	$ 912.41	$ 912.41
18"	11 1/4	1	$ 1,367.86	$ 1,367.86
20"	11 1/4	1	$ 1,548.66	$ 1,548.66
24"	11 1/4	1	$ 1,904.93	$ 1,904.93
TOTAL				$ 18,858.37

M.J. TEE			
SIZE	ESTIMATED USAGE	UNIT PRICE	EXTENDED PRICE
4" x 2"	4	$ 360.08	$ 1,440.33
4" x 4"	5	$ 125.88	$ 629.38
6" x 2"	4	$ 509.61	$ 2,038.43
6" x 4"	4	$ 190.72	$ 762.89
6" x 6"	20	$ 213.61	$ 4,272.16
8" x 4"	1	$ 253.28	$ 253.28
8" x 6"	6	$ 267.01	$ 1,602.06
8" x 8"	2	$ 316.60	$ 633.20
10" x 4"	1	$ 344.06	$ 344.06
10" x 6"	2	$ 415.01	$ 830.02
10" x 8"	2	$ 488.25	$ 976.49
10" x 10"	2	$ 553.09	$ 1,106.19
12" x 4"	1	$ 452.39	$ 452.39
12" x 6"	3	$ 501.22	$ 1,503.65
12" x 8"	1	$ 529.44	$ 529.44
12" x 10"	1	$ 652.55	$ 652.55
12" x 12"	4	$ 697.28	$ 2,789.11
14" x 6"	1	$ 88,418.56	$ 88,418.56
14" x 8"	1	$ 1,000.14	$ 1,000.14
14" x 10"	1	$ 1,104.66	$ 1,104.66
14" x 12"	1	$ 1,187.81	$ 1,187.81
14" x 14"	1	$ 1,357.18	$ 1,357.18
16" x 6"	1	$ 1,140.52	$ 1,140.52
16" x 8"	1	$ 1,237.40	$ 1,237.40
16" x 10"	1	$ 1,357.18	$ 1,357.18
16" x 12"	1	$ 1,480.00	$ 1,480.00
16" x 14"	1	$ 1,672.25	$ 1,672.25
16" x 16"	1	$ 1,866.02	$ 1,866.02
18" x 6"	1	$ 1,672.25	$ 1,672.25
18" x 10"	1	$ 1,942.31	$ 1,942.31
18" x 12"	1	$ 2,142.19	$ 2,142.19
18" x 14"	1	$ 2,232.97	$ 2,232.97
18" x 16"	1	$ 3,954.80	$ 3,954.80
18" x 18"	1	$ 4,613.94	$ 4,613.94
20" x 6"	1	$ 1,965.96	$ 1,965.96
20" x 8"	1	$ 2,011.73	$ 2,011.73
20" x 10"	1	$ 3,844.19	$ 3,844.19
20" x 12"	1	$ 2,491.59	$ 2,491.59
20" x 14"	1	$ 3,024.85	$ 3,024.85
20" x 16"	1	$ 3,233.88	$ 3,233.88
18" x 18"	1	$ 4,613.94	$ 4,613.94
20" x 20"	1	$ 4,284.37	$ 4,284.37
24" x 6"	1	$ 2,445.81	$ 2,445.81

***continue on upper right column*

CONTINUED FROM LEFT COLUMN

24" x 8"	1	$ 2,642.64	$ 2,642.64
24" x 10"	1	$ 2,889.81	$ 2,889.81
24" x 12"	1	$ 4,629.20	$ 4,629.20
24" x 14"	1	$ 3,428.41	$ 3,428.41
24" x 16"	1	$ 3,619.13	$ 3,619.13
24" x 18"	1	$ 3,638.21	$ 3,638.21
24" x 20"	1	$ 4,098.99	$ 4,098.99
24" x 24"	1	$ 4,642.93	$ 4,642.93
TOTAL			$ 196,701.44

M.J. CROSS			
SIZE	ESTIMATED USAGE	UNIT PRICE	EXTENDED PRICE
4" x 4"	2	$ 280.74	$ 561.48
6" x 4"	2	$ 262.43	$ 524.87
6" x 6"	2	$ 399.75	$ 799.51
8" x 4"	1	$ 355.51	$ 355.51
8" x 6"	1	$ 411.30	$ 411.30
8" x 8"	1	$ 469.94	$ 469.94
10" x 4"	1	$ 411.96	$ 411.96
10" x 6"	1	$ 508.08	$ 508.08
10" x 8"	1	$ 569.88	$ 569.88
10" x 10"	1	$ 654.56	$ 654.56
12" x 4"	1	$ 501.98	$ 501.98
12" x 6"	1	$ 579.03	$ 579.03
12" x 8"	1	$ 622.52	$ 622.52
12" x 10"	1	$ 785.01	$ 785.01
12" x 12"	1	$ 847.57	$ 847.57
TOTAL			$ 8,603.18

FLANGE TO M.J. ADAPTERS			
SIZE	ESTIMATED USAGE	UNIT PRICE	EXTENDED PRICE
4"	5	$ 105.28	$ 526.39
6"	5	$ 141.90	$ 709.48
8"	5	$ 205.98	$ 1,029.90
10"	5	$ 366.95	$ 1,834.74
12"	5	$ 427.22	$ 2,136.08
TOTAL			$ 6,236.60

M.J. x FLANGE 90 ADAPTERS			
SIZE	ESTIMATED USAGE	UNIT PRICE	EXTENDED PRICE
4"	5	$ 157.15	$ 785.77
6"	5	$ 251.75	$ 1,258.76
8"	5	$ 306.68	$ 1,533.40
10"	5	$ 476.04	$ 2,380.21
12"	5	$ 666.76	$ 3,333.81
TOTAL			$ 9,291.96

*MEGA LUG 2000 SERIES			
*RESTRAINT GLANDS (FOR C900 PVC) SETS			
SIZE	ESTIMATED USAGE	UNIT PRICE	EXTENDED PRICE
4"	20	$ 48.24	$ 964.84
6"	100	$ 61.53	$ 6,152.63
8"	50	$ 82.40	$ 4,120.00
10"	20	$ 139.96	$ 2,799.16
12"	20	$ 147.31	$ 2,946.11
14"	10	$ 217.98	$ 2,179.79
16"	10	$ 284.06	$ 2,840.63
18"	10	$ 341.45	$ 3,414.53
20"	10	$ 417.75	$ 4,177.47
24"	10	$ 485.37	$ 4,853.68
TOTAL			$ 34,448.84

*MEGA LUG 1100 SERIES			
*MECHANICAL JOINT ACCESSORY SET			
SIZE	ESTIMATED USAGE	UNIT PRICE	EXTENDED PRICE
4"	20	$ 51.79	$ 1,035.79
6"	100	$ 65.29	$ 6,529.47
8"	50	$ 71.43	$ 3,571.50
10"	20	$ 102.04	$ 2,040.80
12"	20	$ 134.86	$ 2,697.20
14"	10	$ 167.43	$ 1,674.30
16"	10	$ 279.33	$ 2,793.26
18"	10	$ 301.16	$ 3,011.60
20"	10	$ 367.88	$ 3,678.84
24"	10	$ 499.88	$ 4,998.80
TOTAL			$ 32,031.57

RESTRAINER CLAMPS			
SIZE	ESTIMATED USAGE	UNIT PRICE	EXTENDED PRICE
4"	20	$ 61.38	$ 1,227.58
6"	50	$ 84.12	$ 4,205.79
8"	20	$ 106.85	$ 2,137.05
10"	20	$ 176.24	$ 3,524.84
12"	10	$ 220.64	$ 2,206.42
14"	10	$ 443.85	$ 4,438.53
16"	10	$ 494.60	$ 4,946.00
18"	10	$ 545.35	$ 5,453.47
20"	10	$ 773.65	$ 7,736.53
24"	10	$ 100.93	$ 1,009.26
TOTAL			$ 36,885.47

RESTRAINT GLAND (FOR C.I.P.)			
SIZE	ESTIMATED USAGE	UNIT PRICE	EXTENDED PRICE
4"	20	$ 51.79	$ 1,035.79
6"	100	$ 65.29	$ 6,529.47
8"	50	$ 71.43	$ 3,571.58
10"	20	$ 102.04	$ 2,040.84
12"	20	$ 134.86	$ 2,697.26
14"	10	$ 167.43	$ 1,674.32
16"	10	$ 279.33	$ 2,793.26
18"	10	$ 301.16	$ 3,011.58
20"	10	$ 367.88	$ 3,678.84
24"	10	$ 499.88	$ 4,998.84
TOTAL			$ 32,031.79

MECHANICAL JOINT ACCESSORY KIT			
SIZE	ESTIMATED USAGE	UNIT PRICE	EXTENDED PRICE
2"	10	$ 14.43	$ 144.29
4"	20	$ 14.43	$ 288.57
6"	100	$ 19.24	$ 1,924.29
8"	50	$ 21.53	$ 1,076.43
10"	20	$ 26.34	$ 526.86
12"	20	$ 27.90	$ 558.00
14"	10	$ 42.79	$ 427.86
16"	10	$ 44.94	$ 449.43
18"	10	$ 48.70	$ 487.00
20"	10	$ 63.43	$ 634.29
24"	10	$ 64.54	$ 645.43
TOTAL			$ 7,162.43

Specifications – Fire Hydrants

Fire hydrants shall meet or exceed **AWWA C502**, latest revisions. Rated water working pressure shall be 150 psi, test pressure shall be 300 psi, and hydrants shall include the following specific design criteria:

1. The main valve closure shall be of the compression type, opening against the pressure and closing with the pressure. Traffic feature to be designed so that the nozzle section of the hydrant can be rotated (by degree) to full 360-degree circle during field installation, if necessary.

2. The main valve closure shall not be less than 5 ¼" and designed so that removal of seat, drain valve mechanism, internal rod and all working parts can be removed through the top of the hydrant. These parts shall be removable without disturbing the ground line joint or the nozzle section of the fire hydrant. The bronze seat shall be threaded into mating threads of bronze for easy field removal.

3. The operating nut, main stem, coupling and main valve assembly shall be capable of withstanding input torque of 200 ft/lbs., in opening and closing directions. There shall be an internal top housing, with triple O-rings, to seal operating threads from the waterway and accommodate an anti-friction washer.

4. Nozzle section of hydrant shall be designed to permit field replacement of damaged threads without special tools, excavation, or disturbing the ground line joint. Threading of the nozzles and shape operating nut shall be per City of Sherman.

5. Hydrants shall have a **storz pumper** connection.

6. Direction of opening shall be clockwise.

7. Hydrant color shall be aluminum.

8. Lower barrel shall be stenciled: Sherman, TX

9. Fire hydrants shall be **Mueller Super Centurion, Waterous Pacer, American AVK nostalgic (2780), Clow Medallion, or M & H style 129.**

FIRE HYDRANTS			
SIZE	ESTIMATED USAGE	UNIT PRICE	EXTENDED PRICE
2'	1	$ 2,704.41	$ 2,704.41
2 1/2'	1	$ 2,704.41	$ 2,704.41
3'	5	$ 2,760.61	$ 13,803.05
3 1/2'	5	$ 2,816.82	$ 14,084.10
4'	10	$ 2,873.02	$ 28,730.20
4 1/2'	10	$ 2,929.22	$ 29,292.20
5'	10	$ 2,985.43	$ 29,854.30
5 1/2	5	$ 3,041.63	$ 15,208.15
6'	3	$ 3,097.84	$ 9,293.52
6 1/2'	3	$ 3,154.04	$ 9,462.12
7'	2	$ 3,210.24	$ 6,420.48
TOTAL			$ 161,556.94

FIRE HYDRANT EXTENSION KIT			
SIZE	ESTIMATED USAGE	UNIT PRICE	EXTENDED PRICE
6"	10	$ 463.37	$ 4,633.70
12"	5	$ 545.58	$ 2,727.90
TOTAL			$ 7,361.60

TRAFFIC FLANGE REPAIR KIT			
SIZE	ESTIMATED USAGE	UNIT PRICE	EXTENDED PRICE
N/A	10	$ 244.95	$ 2,449.50
TOTAL			$ 2,449.50

MAIN VALVE REPAIR KIT			
SIZE	ESTIMATED USAGE	UNIT PRICE	EXTENDED PRICE
N/A	10	$ 149.47	$ 1,494.70
TOTAL			$ 1,494.70

Specifications – Stainless Steel Repair Clamps

1. **Shell** – 304 Stainless Steel , 18 to 28 gauge, depending on size.
2. **Sidebars** – Heavy gauge 304 Stainless Steel, GTWA welded to form, permanent fusion with shell.
3. **Lugs** – 304 Stainless Steel, fused to sidebar by GMAW weld.
4. **Bolts** – 304 Stainless Steel, 4-inch clamps and small use ½" UNC rolled thread, 6- inch clamps and larger use 5/8" rolled threads. Bolts are GMAW welded to sidebar.
5. **Nuts** – Heavy hex, 304 Stainless Steel, 4-inch clamps and smaller use ½" UNC thread, 6-inch clamps and larger use 5/8" UNC threads. Nuts coated to prevent galling.
6. **Washers** – 5/8" 304 Stainless Steel flat washers, on sizes 13/55 and larger. ½" or 5/8" plastic washer between nut or Stainless Steel washer and lift bar, on all sizes.
7. **Armors** – Heavy gauge 304 Stainless Steel, bonded to gasket to bridge gap at lug area.
8. **Lifter Bars** – 304 Stainless Steel, lip curved to hold position while tightening. Heavy gauge to serve as bearing surface for nuts.
9. **Gaskets** – Virgin SBR rubber compounded for water and sewer service, in accordance with ASTM D 2000 MMA 610 resistance.

REPAIR CLAMPS ROMAC - SS1 STAINLESS STEEL OR EQUAL (FOR D.I. & C900 PVC)			
SIZE	ESTIMATED USAGE	UNIT PRICE	EXTENDED PRICE
2" x 8"	50	$ 57.72	$ 2,886.00
2" x 10"	50	$ 77.94	$ 3,897.00
2" x 12"	50	$ 84.32	$ 4,216.00
2" x 16"	50	$ 100.05	$ 5,002.50
4" x 8"	50	$ 83.47	$ 4,173.50
4" x 10"	50	$ 95.01	$ 4,750.50
4" x 12"	50	$ 113.71	$ 5,685.50
4" x 16"	50	$ 132.97	$ 6,648.50
4" x 20"	10	$ 210.84	$ 2,108.40
6" x 8"	100	$ 83.36	$ 8,336.00
6" x 10"	100	$ 113.10	$ 11,310.00
6" x 12"	100	$ 123.02	$ 12,302.00
6" x 16"	50	$ 147.38	$ 7,369.00
6" x 20"	25	$ 205.38	$ 5,134.50
8" x 8"	25	$ 92.73	$ 2,318.25
8" x 10"	25	$ 113.10	$ 2,827.50
8" x 12"	50	$ 123.02	$ 6,151.00
8" x 16"	50	$ 147.38	$ 7,369.00
8" x 20"	25	$ 221.91	$ 5,547.75
10" x 8"	20	$ 113.93	$ 2,278.60
10" x 10"	20	$ 154.51	$ 3,090.20
10" x 12"	25	$ 164.69	$ 4,117.25
10" x 16"	25	$ 205.80	$ 5,145.00
10" x 20"	10	$ 274.84	$ 2,748.40
12" x 8"	10	$ 125.58	$ 1,255.80
12" x 10"	10	$ 166.09	$ 1,660.90
12" x 12"	25	$ 200.87	$ 5,021.75
12" x 16"	25	$ 227.08	$ 5,677.00
12" x 20"	25	$ 316.43	$ 7,910.75
14" x 24"	6	$ 609.12	$ 3,654.72
16" x 24"	6	$ 678.93	$ 4,073.58
18" x 24"	6	$ 902.05	$ 5,412.30
20" x 24"	6	$ 1,009.68	$ 6,058.08
24" x 24"	6	$ 1,491.60	$ 8,949.60
TOTAL			$ 175,086.83

Specifications – Stainless Steel Tapping Sleeves

1. **Flange** – Ductile iron that meets or exceeds ASTM A536 standards. All flanges in accordance with ANSI class 125 and 150 drilling and recess to accept tapping valve.

2. **Stainless Steel** – Meets or exceeds ASTM A 240 type 304 USN-designated S30400.

3. **Outlet** – Heavy gauge 304L Stainless Steel. Fused to shell by GMAW weld on the outside and GTAW weld on the inside.

4. **Shell** – Heavy gauge Stainless Steel top half 304L, back half 304.

5. **Side Bars** – Heavy gauge 304 Stainless Steel, GTAW welded to form permanent fusion with shell.

6. **Lugs** – 304 Stainless Steel, fused to sidebar by GMAW welding.

7. **Bolts** – 304 Stainless Steel, bolts are to be GMAW welded to sidebar.

8. **Nuts** – Heavy hex, coated to prevent galling.

9. **Armors** – Heavy gauge 304 Stainless Steel.

10. **Lifter Bars** – 304 Stainless Steel lip curved to hold position while tightening. Heavy gauge to serve as bearing surface for nuts.

11. **Gaskets** – Virgin SBR rubber compounded for water and sewer service, in accordance with ASTM D 2000 MMA610. Grid pattern and tapered ends to assure seal around full circumference of pipe. Working pressure up to 200 psi. Test pressure of 300 psi.

12. **Welds** – GMAW and GTAW weld process. 308L Stainless Steel filler wire used as appropriate. Flange weld-GMAW type proprietary process. All welds will be fully passivated to enhance corrosion resistance.

STAINLESS STEEL TAPPING SLEEVE			
SIZE	ESTIMATED USAGE	UNIT PRICE	EXTENDED PRICE
4" x 4"	4	$ 448.96	$ 1,795.84
6" x 4"	6	$ 459.79	$ 2,758.74
6" x 6"	10	$ 525.86	$ 5,258.60
8" x 4"	1	$ 517.16	$ 517.16
8" x 6"	4	$ 541.91	$ 2,167.64
8" x 8"	4	$ 683.48	$ 2,733.92
10" x 4"	1	$ 543.99	$ 543.99
10" x 6"	4	$ 567.61	$ 2,270.44
10" x 8"	2	$ 689.91	$ 1,379.82
10" x 10"	2	$ 1,108.55	$ 2,217.10
12" x 4"	1	$ 582.60	$ 582.60
12" x 6"	2	$ 625.54	$ 1,251.08
12" x 8"	2	$ 745.62	$ 1,491.24
12" x 10"	2	$ 1,220.93	$ 2,441.86
12" x 12"	2	$ 1,329.02	$ 2,658.04
14" x 6"	1	$ 854.83	$ 854.83
14" x 8"	1	$ 1,092.78	$ 1,092.78
14" x 10"	1	$ 1,469.74	$ 1,469.74
14" x 12"	1	$ 1,615.91	$ 1,615.91
16" x 6"	1	$ 1,032.29	$ 1,032.29
16" x 8"	1	$ 1,195.79	$ 1,195.79
16" x 10"	1	$ 1,661.22	$ 1,661.22
16" x 12"	1	$ 1,758.73	$ 1,758.73
18" x 6"	1	$ 1,056.33	$ 1,056.33
18" x 8"	1	$ 1,206.33	$ 1,206.33
18" x 10"	1	$ 1,710.49	$ 1,710.49
18" x 12"	1	$ 1,807.88	$ 1,807.88
20" x 6"	1	$ 1,227.47	$ 1,227.47
20" x 8"	1	$ 1,472.66	$ 1,472.66
20" x 10"	1	$ 1,951.19	$ 1,951.19
20" x 12"	1	$ 2,082.27	$ 2,082.27
24" x 6"	1	$ 1,408.13	$ 1,408.13
24" x 8"	1	$ 1,593.80	$ 1,593.80
24" x 10"	1	$ 2,248.66	$ 2,248.66
24" x 12"	1	$ 2,355.00	$ 2,355.00
TOTAL			$ 60,869.57

BRASS PIPE FITTINGS - *NO LEAD BRASS*			
SIZE	ESTIMATED USAGE	UNIT PRICE	EXTENDED PRICE
1/2" CLOSE NIPPLE	50	$ 2.10	$ 104.86
1/2" x 1 1/2" NIPPLE	50	$ 2.43	$ 121.52
1/2 x 2" NIPPLE	50	$ 2.74	$ 136.84
1/2" x 2 1/2" NIPPLE	50	$ 3.35	$ 167.58
1/2" x 3" NIPPLE	50	$ 3.83	$ 191.59
1/2" x 3 1/2" NIPPLE	50	$ 4.35	$ 217.56
1/2" x 4" NIPPLE	50	$ 4.90	$ 245.00
1/2" x 4 1/2" NIPPLE	50	$ 5.41	$ 270.28
1/2" x 5 NIPPLE	50	$ 5.84	$ 292.13
1/2" x 5 1/2 NIPPLE	50	$ 6.46	$ 323.00
1/2" x 6 NIPPLE	50	$ 7.00	$ 350.08
1/2 x 6 1/2 " NIPPLE	50	$ 8.30	$ 415.15
1/2" x 1/2" 90 ELL	100	$ 4.66	$ 465.50
1/2" STREET 90 ELL	100	$ 4.84	$ 483.55
1/2" TEE	50	$ 4.47	$ 223.73
1/2" COUPLING	100	$ 3.20	$ 320.15
1/2" x 3/4 BELL REDUCER	200	$ 2.70	$ 540.00
1/2" x 3/4" BUSHING REDUCER	200	$ 2.70	$ 540.00
1/2" MIP PLUG	200	$ 2.68	$ 535.80
COMPRESSION COUPLING FOR 1/2" COPPER	100	$ 2.68	$ 267.90
COMPRESSION COUPLING FOR 1/2" IRON PIPE	100	$ 18.78	$ 1,878.15
1/2" HOSE BIB	50	$ 5.67	$ 283.50
3/4" CLOSE NIPPLE	600	$ 2.95	$ 1,772.70
3/4" x 1 1/2" NIPPLE	600	$ 3.14	$ 1,886.70
3/4" x 2" NIPPLE	600	$ 3.71	$ 2,228.70
3/4" x 2 1/2" NIPPLE	600	$ 4.31	$ 2,587.80
3/4" x 3" NIPPLE	600	$ 4.97	$ 2,981.10
3/4" x 3 1/2" NIPPLE	200	$ 5.48	$ 1,096.30
3/4" x 4" NIPPLE	200	$ 6.37	$ 1,274.90
3/4" x 4 1/2" NIPPLE	100	$ 6.93	$ 692.55
3/4" x 5" NIPPLE	100	$ 7.89	$ 788.90
3/4" HOSE BIB	50	$ 5.63	$ 281.26
3/4" x 5 1/2" NIPPLE	50	$ 8.62	$ 431.20
3/4" x 6" NIPPLE	50	$ 9.60	$ 480.20
3/4" x 6 1/2" NIPPLE	50	$ 10.83	$ 541.45
3/4" 90 ELL	300	$ 5.40	$ 1,619.94
3/4" TEE	200	$ 4.98	$ 995.29

BRASS PIPE FITTINGS - *NO LEAD BRASS*			
SIZE	ESTIMATED USAGE	UNIT PRICE	EXTENDED PRICE
3/4" COUPLING	500	$ 4.37	$ 2,185.40
3/4" x 1/2" 90 ELL	1000	$ 6.16	$ 6,164.20
3/4" STREET 90 ELL	200	$ 7.03	$ 1,405.32
3/4" C.F. x M.I.P. ADAPTER	500	$ 14.89	$ 7,443.30
3/4" C.F. x C.F. THREE PART UNION	200	$ 18.79	$ 3,758.76
COMPRESSION COUPLING FOR 3/4" COPPER	300	$ 20.38	$ 6,114.43
COMPRESSION COUPLING FOR 3/4" IRON PIPE	100	$ 25.46	$ 2,546.39
1" CLOSE NIPPLE	300	$ 3.44	$ 1,031.25
1" x 1 1/2" NIPPLE	300	$ 3.75	$ 1,125.00
1" x 2" NIPPLE	300	$ 3.89	$ 1,165.88
1" x 2 1/2" NIPPLE	300	$ 4.63	$ 1,389.00
1" x 3" NIPPLE	100	$ 5.79	$ 578.75
1" x 3 1/2 NIPPLE	100	$ 6.99	$ 699.00
1" x 4 NIPPLE	100	$ 7.92	$ 792.00
1" x 4 1/2" NIPPLE	100	$ 8.80	$ 880.00
1" x 5" NIPPLE	100	$ 9.78	$ 977.78
1" x 5 1/2" NIPPLE	100	$ 10.87	$ 1,086.67
1" x 6" NIPPLE	100	$ 11.75	$ 1,174.67
1" x 6 1/2" NIPPLE	50	$ 13.06	$ 652.78
1" 90 ELL	200	$ 7.96	$ 1,592.00
1" STREET 90 ELL	100	$ 12.39	$ 1,238.67
1" TEE	200	$ 9.95	$ 1,989.33
1" COUPLING	300	$ 6.43	$ 1,929.45
1" x 3/4" BELL REDUCER	300	$ 7.44	$ 2,232.00
1" x 3/4" BUSHING REDUCER	300	$ 3.68	$ 1,104.00
1" x 3/4" 90 ELL	200	$ 10.42	$ 2,084.30
1" C.F. x M.I.P. ADAPTER	200	$ 21.26	$ 4,251.55
1" C.F. x C.F. THREE PART UNION	200	$ 32.93	$ 6,585.57
COMPRESSION COUPLING FOR 1" I.P.	200	$ 50.88	$ 10,175.26
COMPRESSION COUPLING FOR 1" I.P.	100	$ 23.32	$ 2,331.96
1 1/2" x CLOSE NIPPLE	10	$ 7.36	$ 73.60

CONTINUE ON NEXT PAGE*

BRASS PIPE FITTINGS - *NO LEAD BRASS*			
SIZE	ESTIMATED USAGE	UNIT PRICE	EXTENDED PRICE
1 1/2" x 3" NIPPLE	10	$ 12.52	$ 125.19
1 1/2" x 4" NIPPLE	10	$ 13.91	$ 139.07
1 1/2" x 5" NIPPLE	10	$ 15.46	$ 154.56
1 1/2" x 6" NIPPLE	10	$ 22.81	$ 228.13
1 1/2" x 7" NIPPLE	10	$ 26.08	$ 260.78
1 1/2" x 8" NIPPLE	10	$ 29.61	$ 296.12
1 1/2" x 1" BUSHING REDUCER	10	$ 9.22	$ 92.25
1 1/2" x 1" BELL REDUCER	10	$ 17.81	$ 178.07
1 1/2" COUPLING	10	$ 14.10	$ 141.02
1 1/2" 90 ELL	10	$ 22.32	$ 223.16
1 1/2" TEE	10	$ 21.64	$ 216.40
1 1/2" x 1 1/4" BUSHING REDUCER	10	$ 9.22	$ 92.25
1 1/2" C.F. x M.I.P. ADAPTER	25	$ 65.56	$ 1,638.92
1 1/2" C.F. x C.F. THREE PART UNION	50	$ 98.82	$ 4,941.24
COMPRESSION COUPLING FOR 1 1/2"	50	$ 78.01	$ 3,900.52
2" x CLOSE NIPPLE	10	$ 11.47	$ 114.65
2" x 3" NIPPLE	10	$ 13.67	$ 136.67
2" x 4" NIPPLE	10	$ 17.88	$ 178.80
2" x 5" NIPPLE	10	$ 19.87	$ 198.67
2" x 6" NIPPLE	10	$ 26.39	$ 263.87
2" x 7" NIPPLE	10	$ 29.32	$ 293.22
2" x 8" NIPPLE	10	$ 34.49	$ 344.94
2" x 1 1/2" REDUCING BUSHING	10	$ 11.89	$ 118.93
2" x 1 1/2" BELL REDUCER	10	$ 26.43	$ 264.29
2" COUPLING	10	$ 22.50	$ 224.96
2" 90 ELL	10	$ 22.71	$ 227.07
2" TEE	10	$ 31.45	$ 314.53
2" C.F. x M.I.P. ADAPTER	25	$ 120.32	$ 3,007.99
2" C.F. x C.F. THREE PART UNION	20	$ 161.27	$ 3,225.36
COMPRESSION COUPLING FOR 2" COPPER (FORD C44-	20	$ 105.35	$ 2,107.01
COMPRESSION COUPLING FOR 2" I.P.	20	$ 149.34	$ 2,986.80
TOTAL			$ 131,426.50

METER COUPLINGS -- NO LEAD BRASS				
SIZE	ESTIMATED USAGE	UNIT PRICE		EXTENDED PRICE
5/8" - 1/4 BEND METER COUPLING	500	$ 16.02		$ 8,010.31
3/4" - 1/4 BEND METER COUPLING	500	$ 15.97		$ 7,984.54
1" - 1/4 BEND METER COUPLING	100	$ 22.82		$ 2,282.47
TOTAL				$ 18,277.32

CURB STOPS -- NO LEAD BRASS				
SIZE	ESTIMATED USAGE	UNIT PRICE		EXTENDED PRICE
3/4" F.I.P. x 3/4" F.I.P.	200	$ 59.51		$ 11,901.03
3/4" F.I.P. x 3/4" C.F.	500	$ 69.98		$ 34,989.69
3/4" F.I.P. x 3/4" PACK JOINT COPPER	200	$ 66.91		$ 13,381.44
1" F.I.P. x 1" F.I.P.	200	$ 91.20		$ 18,239.18
1" F.I.P. x 1" C.F.	200	$ 97.75		$ 19,550.52
1" F.I.P. x 1" PACK JOINT COPPER	100	$ 102.04		$ 10,204.12
1 1/2 F.I.P. x 1 1/2" F.I.P.	20	$ 185.46		$ 3,709.28
1 1/2" F.I.P. x 1 1/2" C.F.	30	$ 219.66		$ 6,589.79
1 1/2" F.I.P. x 1 1/2" PACK JOINT COPPER	30	$ 219.74		$ 6,592.27
2" F.I.P. x 2" F.I.P.	30	$ 270.03		$ 8,100.93
2" F.I.P. x 2" C.F.	30	$ 321.41		$ 9,642.37
2" F.I.P. x 2" PACK JOINT COPPER	30	$ 304.54		$ 9,136.08
TOTAL				$ 152,036.70

CORPORATION STOPS (FULL PORT) - NO LEAD BRASS				
SIZE	ESTIMATED USAGE	UNIT PRICE		EXTENDED PRICE
3/4" C.C. x 3/4" C.F.	300	$ 52.12		$ 15,637.11
3/4" C.C. x 3/4" PACK JOINT COPPER	100	$ 54.00		$ 5,400.00
1" C.C. x 1" C.F.	200	$ 54.00		$ 10,800.00
1" C.C. x 1" PACK JOINT COPPER	100	$ 71.01		$ 7,101.03
1 1/2" C.C. x 1 1/2" C.F.	100	$ 158.39		$ 15,839.18
1 1/2" C.C. x 1 1/2" PACK JOINT COPPER	50	$ 276.67		$ 13,833.51
2" C.C. x 2" C.F.	100	$ 276.67		$ 27,667.01
2" C.C. x 2" PACK JOINT COPPER	50	$ 261.96		$ 13,097.94
TOTAL				$ 109,375.77

COPPER TUBE TYPE "K" - 60' ROLL				
SIZE	ESTIMATED USAGE	UNIT PRICE		EXTENDED PRICE
3/4"	1 ROLL	$ 326.40		$ 326.40
1"	1 ROLL	$ 432.80		$ 432.80
1 1/2"	1 ROLL	$ 967.20		$ 967.20
40' ROLLS	1 ROLL	$ 989.87		$ 989.87
TOTAL				$ 2,716.27

POLY (MUNICIPEX)				
SIZE	ESTIMATED USAGE	UNIT PRICE		EXTENDED PRICE
3/4" x100	75 ROLLS	$ 53.33		$ 3,999.75
1" x100	50 ROLLS	$ 83.33		$ 4,166.50
1 1/2" x100	20 ROLLS	$ 175.00		$ 3,500.00
2" x100	20 ROLLS	$ 288.33		$ 5,766.60
TOTAL				$ 17,432.85

SERVICE SADDLES				
DOUBLE STRAP SERVICE STRADDLES				
NYLON COATED SADDLES WITH STAINLESS STEEL STRAPS				
ROMAC STYLE 202N or		ESTIMATED USAGE	UNIT PRICE	EXTENDED PRICE
PIPE SIZE	SERVICE			
4"	3/4"	100	$ 59.76	$ 5,976.00
4"	1"	50	$ 59.76	$ 2,988.00
4"	1 1/2"	10	$ 73.20	$ 732.00
4"	2"	10	$ 80.93	$ 809.30
6"	3/4"	500	$ 77.26	$ 38,630.00
6"	1"	200	$ 77.26	$ 15,452.00
6"	1 1/2"	25	$ 83.91	$ 2,097.75
6"	2"	25	$ 92.60	$ 2,315.00
8"	3/4"	100	$ 91.29	$ 9,129.00
8"	1"	100	$ 91.29	$ 9,129.00
8"	1 1/2"	15	$ 98.79	$ 1,481.85
8"	2"	15	$ 107.77	$ 1,616.55
10"	3/4"	50	$ 108.50	$ 5,425.00
10"	1"	50	$ 108.50	$ 5,425.00
10"	1 1/2"	15	$ 117.10	$ 1,756.50
10"	2"	15	$ 125.86	$ 1,887.90
12"	3/4"	50	$ 118.85	$ 5,942.50
12"	1"	25	$ 118.85	$ 2,971.25
12"	1 1/2"	15	$ 135.24	$ 2,028.60
12"	2"	15	$ 135.24	$ 2,028.60
14"	3/4"	6	$ 138.20	$ 829.20
14"	1"	6	$ 138.20	$ 829.20
14"	1 1/2"	6	$ 147.53	$ 885.18
14"	2"	6	$ 147.53	$ 885.18
16"	3/4"	4	$ 161.49	$ 645.96
16"	1"	4	$ 161.49	$ 645.96
16"	1 1/2"	4	$ 172.63	$ 690.52
16"	2"	4	$ 172.63	$ 690.52
18"	3/4"	4	$ 197.87	$ 791.48
18"	1"	4	$ 197.87	$ 791.48
18"	1 1/2"	4	$ 208.66	$ 834.64
18"	2"	4	$ 208.66	$ 834.64
20"	3/4"	4	$ 227.55	$ 910.20
20"	1"	4	$ 227.55	$ 910.20
20"	1 1/2"	4	$ 231.06	$ 924.24
20"	2"	4	$ 231.06	$ 924.24
24"	3/4"	4	$ 254.62	$ 1,018.48

CONTINUE ON NEXT PAGE

***CONTINUED*

24"	1"	4	$	252.07	$ 1,008.28
24"	1 1/2"	4	$	262.31	$ 1,049.24
24"	2"	4	$	262.31	$ 1,049.24
ROMAC STYLE 101N OR EQUAL		**ESTIMATED USAGE**	**UNIT PRICE**		**EXTENDED PRICE**
PIPE SIZE	SERVICE				
2"	3/4"	100	$	39.41	$ 3,941.00
2"	1"	75	$	39.41	$ 2,955.75
TOTAL					$ 141,866.63

ADJUSTABLE CAST IRON VALVE BOX 24" TO 36"			
SIZE	ESTIMATED USAGE	UNIT PRICE	EXTENDED PRICE
BOX & LID	100	$ 151.20	$ 15,120.00
BOX	100	$ 133.56	$ 13,356.00
LID	100	$ 17.64	$ 1,764.00
TOTAL			$ 30,240.00

VALVE BOX RISERS (CAST IRON)			
SIZE	ESTIMATED USAGE	UNIT PRICE	EXTENDED PRICE
1"	40	$ 11.76	$ 470.40
2"	40	$ 18.48	$ 739.20
3"	40	$ 31.08	$ 1,243.20
4"	40	$ 43.68	$ 1,747.20
6"	40	$ 62.16	$ 2,486.40
TOTAL			$ 6,686.40

MANHOLE GASKETS			
SIZE	ESTIMATED USAGE	UNIT PRICE	EXTENDED PRICE
4"	20	$ 2.31	$ 46.20
6"	20	$ 2.99	$ 59.80
8"	20	$ 3.66	$ 73.20
10"	20	$ 4.43	$ 88.60
12"	10	$ 5.18	$ 51.80
15"	10	$ 19.75	$ 197.50
18"	10	$ 24.74	$ 247.40
21"	10	$ 28.36	$ 283.60
24"	10	$ 31.56	$ 315.60
TOTAL			$ 1,363.70

MANHOLE RING & LID 32"			
DESCRIPTION	ESTIMATED USAGE	UNIT PRICE	EXTENDED PRICE
RING & LID	50	$ 651.57	$ 32,578.50
RING	50	$ 301.62	$ 15,081.00
LID	50	$ 349.95	$ 17,497.50
VENTILATED MANHOLE	2	$ 329.18	$ 658.36
RING & LID (BOLT DOWN)	10	$ 665.25	$ 6,652.50
TOTAL			$ 72,467.86

MANHOLE EXTENSION RINGS			
SIZE	ESTIMATED USAGE	UNIT PRICE	EXTENDED PRICE
32"x 2"	20	$ 313.98	$ 6,279.58
32" x 3"	20	$ 370.76	$ 7,415.16
32" x 4"	20	$ 586.76	$ 11,735.20
32" x 6"	20	$ 737.31	$ 14,746.11
TOTAL			$ 40,176.04

BOXES	METER BOXES			
DESCRIPTION	PART #	ESTIMATED USAGE	UNIT PRICE	EXTENDED PRICE
PLASTIC METER BOX WITH LID	DFW 300 OR EQUAL	400	$ 25.90	$ 10,360.00
LIDS	(FOR ABOVE)	200	$ 12.38	$ 2,475.56
CONCRETE METER BOX WITH LID	BROOKS #37-H OR EQUAL	10	$ 103.86	$ 1,038.56
LIDS	(FOR ABOVE)	20	$ 44.07	$ 881.33
CONCRETE METER BOX WITH LID	BROOKS #37-H OR EQUAL	10	$ 204.80	$ 2,048.00
LIDS	(FOR ABOVE)	20	$ 83.08	$ 1,661.56
PLASTIC METER BOX WITH LID	DFW 1600 OR EQUAL	100	$ 40.26	$ 4,025.56
LIDS	(FOR ABOVE)	100	$ 17.41	$ 1,741.11
TOTAL				$ 24,231.67

FIBERGLASS MANHOLES			
SIZE	ESTIMATED USAGE	UNIT PRICE	EXTENDED PRICE
4'	10	$ 1,990.91	$ 19,909.10
5'	10	$ 2,265.91	$ 22,659.10
6'	10	$ 2,546.59	$ 25,465.90
7'	10	$ 2,834.11	$ 28,341.10
8'	10	$ 3,102.27	$ 31,022.70
TOTAL			$ 127,397.90

4" SCHEDULE 40 DRAIN FITTINGS			
TYPE	ESTIMATED USAGE	UNIT PRICE	EXTENDED PRICE
22 1/2	100	$ 15.07	$ 1,507.00
45	100	$ 9.64	$ 964.00
90	100	$ 11.92	$ 1,192.00
SAN TEE	100	$ 18.51	$ 1,851.00
2-WAY TEE	100	$ 46.30	$ 4,630.00
CAP	100	$ 11.26	$ 1,126.00
GLUE TO F. ADAPTOR	100	$ 10.69	$ 1,069.00
THREAD PLUG	100	$ 5.33	$ 533.00
TOTAL			$ 12,872.00

4" SEWER TAPPING SADDLES -- PREDCO STS 4-E OR EQUAL				
SIZE	ESTIMATED USAGE	UNIT PRICE		EXTENDED PRICE
4" SADDLE TEE (FERNCO)	200	$ 46.94		$ 9,388.00
INSERTA TEE	100	$ 96.33		$ 9,633.00
WRAP-AROUND FERNCO 4" x 6"	200	$ 11.20		$ 2,240.00
WRAP-AROUND FERNCO 4" x 8"	100	$ 19.64		$ 1,964.00
TOTAL				$ 23,225.00

CLAY TILE X SDR 35 PVC ADAPTERS - FERNCO OR EQUAL				
SIZE	ESTIMATED USAGE	UNIT PRICE		EXTENDED PRICE
4" PVC x 4" PVC (SCL 40)	200	$ 4.90		$ 980.00
4" CLAY x 4" PVC (SCL 40)	100	$ 4.90		$ 490.00
6" CLAY x 6" PVC	200	$ 10.48		$ 2,095.56
6" PVC x 6" PVC	100	$ 10.48		$ 1,047.78
8" CLAY x 8" PVC	200	$ 16.12		$ 3,224.44
8" PVC x 8" PVC	100	$ 16.12		$ 1,612.00
10" CLAY x 10" PVC	200	$ 24.20		$ 4,840.00
10" PVC x 10" PVC	100	$ 24.20		$ 2,420.00
12" CLAY x 12" PVC	200	$ 28.23		$ 5,646.67
12" PVC x 12" PVC	100	$ 28.23		$ 2,823.00
15" CLAY x 15" PVC	200	$ 44.40		$ 8,880.00
15" PVC x 15" PVC	100	$ 44.40		$ 4,440.00
18" CLAY x 18" PVC	200	$ 98.29		$ 19,657.78
18" PVC x 18" PVC	100	$ 98.29		$ 9,828.89
21" CLAY x 21" PVC	200	$ 115.11		$ 23,022.22
21" PVC x 21" PVC	100	$ 115.11		$ 11,511.00
24" CLAY x 24" PVC	200	$ 131.89		$ 26,377.78
24" PVC x 24" PVC	100	$ 131.89		$ 13,189.00
TOTAL				$ 142,086.11

GRAND TOTAL FOR NON-PVC BID SECTION $ 2,328,392.99

2,328,392.99

PVC WATER PIPE				
SIZE	TYPE - 20' JOINT	ESTIMATED USAGE (L.F.)	UNIT PRICE (PER L.F.)	EXTENDED PRICE
2"	CLASS 200 PSI	500	$ 1.64	$ 820.00
4"	CLASS 150 DR 18 (C.I.O.D.) PER AWWA	200	$ 6.14	$ 1,228.00
6"	CLASS 150 DR 18 (C.I.O.D.) PER AWWA	2000	$ 12.53	$ 25,060.00
8"	CLASS 150 DR 18 (C.I.O.D.) PER AWWA	1000	$ 21.48	$ 21,480.00
10"	CLASS 150 DR 18 (C.I.O.D.) PER AWWA	200	$ 32.23	$ 6,446.00
12"	CLASS 150 DR 18 (C.I.O.D.) PER AWWA	100	$ 45.39	$ 4,539.00
14"	DR 18 (C.I.O.D.) PER AWWA STANDARD C905	80	$ 64.92	$ 5,193.60
16"	DR 18 (C.I.O.D.) PER AWWA STANDARD C906	80	$ 81.13	$ 6,490.40
18"	DR 18 (C.I.O.D.) PER AWWA STANDARD C907	80	$ 109.48	$ 8,758.40
20"	DR 18 (C.I.O.D.) PER AWWA STANDARD C908	160	$ 130.04	$ 20,806.40
24"	DR 18 (C.I.O.D.) PER AWWA STANDARD C909	80	$ 208.59	$ 16,687.20
TOTAL				$ 117,509.00

PVC SEWER PIPE				
SIZE	TYPE - 20' JOINT	ESTIMATED USAGE (L.F.)	UNIT PRICE (PER L.F.)	EXTENDED PRICE
4"	SCHEDULE 40 PVC	600	$ 4.07	$ 2,442.00
4"	DR 35 (P.S. 46) PMS-O.D. PER ASTM D3034	100	$ 2.42	$ 242.00
6"	DR 35 (P.S. 46) PMS-O.D. PER ASTM D3034	2000	$ 5.61	$ 11,220.00
8"	DR 35 (P.S. 46) PMS-O.D. PER ASTM D3034	800	$ 10.18	$ 8,144.00
10"	DR 35 (P.S. 46) PMS-O.D. PER ASTM D3034	600	$ 15.82	$ 9,492.00
12"	DR 35 (P.S. 46) PMS-O.D. PER ASTM D3034	600	$ 22.77	$ 13,662.00
15"	DR 35 (P.S. 46) PMS-O.D. PER ASTM D3034	400	$ 33.61	$ 13,444.00
18"	DR 35 (P.S. 46) PMS-O.D. PER ASTM F679	400	$ 65.15	$ 26,060.00
21"	DR 35 (P.S. 46) PMS-O.D. PER ASTM F679	100	$ 82.93	$ 8,293.00
24"	DR 35 (P.S. 46) PMS-O.D. PER ASTM F679	100	$ 100.11	$ 10,011.00
TOTAL				$ 103,010.00

SCHEDULE 40 PIPE			
SIZE	ESTIMATED USAGE	UNIT PRICE	EXTENDED PRICE
1/2"	100	$ 0.36	$ 36.00
3/4"	300	$ 0.49	$ 147.00
1"	300	$ 0.72	$ 216.00
1 1/4"	100	$ 0.96	$ 96.00
1 1/2"	100	$ 1.15	$ 115.00
2"	100	$ 1.55	$ 155.00
3"	60	$ 2.43	$ 145.80
TOTAL			$ 910.80

GRAND TOTAL FOR PVC BID SECTION $ 221,429.80

COMBINED **TOTAL** $ 2,549,822.79

NOTE: Based upon the stated evaluation criteria, the City reserves the right to award both sections to one vendor or to separate vendors.

AUTHORIZED SIGNATURE

3/22/24
Signature and Date

ZAC HANSEN
Print Name

PRESIDENT
Title

469-425-4402
Telephone Number

87-4195432
Federal Tax ID Number

NORTH TEXAS WINWATER CO.
Company Name

1010 INDUSTRIAL WAY DR.
Company Address

ANNA, TX 75409
City, State and Zip Code

Fax Number

Zthansen@winwaterworks.com
Email Address

EVALUATION PROCESS

All submitted proposals will be reviewed by the City of Sherman for compliance with the specified RFP requirements. The selection committee will decide proposals which meet the RFP requirements and receive further evaluation.

Based on the firms' response to the RFP requirements, the selection committee will determine the top firm(s) capable of meeting the needs of the City for such services. The City may invite the top firm(s) for an interview before considering a contract. Once the firm has been selected, the City will submit an agreement to the City Council for approval. The following evaluation criteria will be considered by the selection committee.

BEST VALUE EVALUATION CRITERIA

30% Pricing
30% References
40% Qualifications (when applicable, will include past performance of services for the City of Sherman)

TERM

Term for Non-PVC Contract

The initial term for the Non-PVC contract will be for a period of one (1) year, commencing on the date of awarding. The City shall have the option to request additional extensions of this contract for four (4) additional terms of one (1) year each (each a "renewal term") on the same terms and conditions of this contract by giving written notice of its intent to extend prior to the expiration of the then-current one (1) year term.

Term for PVC Contract

The initial term for the PVC contract will be for a period of one (1) year, commencing on the date of awarding. The City shall have the option to request additional extensions of this contract for four (4) additional terms of one (1) year each (each a "renewal term") on the same terms and conditions of this contract by giving written notice of its intent to extend prior to the expiration of the then-current one (1) year term.

NOTE: Any optional contract extensions will require authorized signatures from both the City and the awarded vendor.

Contractor References

Customer Name: CITY OF CELINA

Address: 142 N. OHIO ST. CELINA, TX 75009

Contact: CHRIS COX Telephone #: 972-544-7115

Scope of work performed: CITY ANNUAL FOR WATER/SEWER PARTS

Length of Service: 2 YEARS

Customer Name: E3 UNDERGROUND

Address: 1101 SPYGLASS DR. MANSFIELD, TX 76063

Contact: TREY STEWART Telephone #: 817-723-1775

Scope of work performed: WATER/SEWER SUPPLIES

Length of Service: 3 YEARS

Customer Name: 3S CONTRACTING

Address: 11555 SH 34S QUINLAN, TX 75474

Contact: STEVE SALISBURY Telephone #: 817-229-7712

Scope of work performed: WATER / SEWER SUPPLIES

Length of Service: 3 YEARS

Exhibit C
City's Insurance Requirements

I. GENERAL INSURANCE REQUIREMENTS –

A. All policies shall name the City of Sherman, its officers, agents, representatives and employees as additional insureds as to all applicable coverages with the exception of workers compensation insurance.

B. Such policies shall require the provision of written notice to City at least thirty (30) days prior to cancellation, non-renewal or material modification of any policies, evidenced by return receipt or United States Certified Mail.

C. Such policies shall provide for a waiver of subrogation against City for injuries, including death, property damage or any other loss to the extent the same is covered by the proceeds of the insurance.

II. INSURANCE COMPANY QUALIFICATION – All insurance companies providing the required insurance shall be authorized to transact business in the State of Texas, and shall have a minimum rating of "A" by A.M. Best's Key Rating Guide, or other equivalent rating service(s).

III. CERTIFICATE OF INSURANCE – A Certificate of Insurance and all applicable endorsement(s) evidencing the required insurance shall be submitted prior to commencing work under this Agreement. If the Agreement is renewed or extended by City, a Certificate of Insurance and all applicable endorsement(s) shall also be provided to City prior to the date the Agreement is renewed or extended.

IV. INSURANCE CHECKLIST – "X" means that the following coverage is required for this Agreement.

Coverage Required		Limits
X	1. Worker's Compensation & Employer's Liability	▪ Statutory Limits of the State of Texas
X	2. General Liability	▪ Minimum $1,000,000.00 each occurrence; ▪ Minimum $2,000,000.00 in the aggregate.
___	3. XCU Coverage	▪ Minimum $1,000,000.00 each occurrence; ▪ Minimum $2,000,000.00 in the aggregate.
___	4. Professional Liability	▪ Minimum $1,000,000.00 each claim; ▪ Minimum $2,000,000.00 in the aggregate.
___	5. Umbrella Coverage or Excess Liability Coverage	▪ An amount of $ 2,000,000.00.
X	6. City and its officers, agents, representatives and employees named as additional insured on General Liability Policy, as provided above. This coverage is primary to all other coverage City may possess.	
X	7. General Liability Insurance provides for a Waiver of Subrogation against City for injuries, including death, property damage, or any other loss to the extent that same is covered by the proceeds of the insurance. All insurance policies that are required to name City as an additional insured must be endorsed to read as primary and non-contributory coverage regardless of the application of other insurance.	

_X_ 8. Thirty (30) days' notice of cancellation, non-renewal, or material change required. The words "endeavor to" and "but failure" (to end of sentence) are to be eliminated from the Notice of Cancellation provision on standard ACORD certificates.

_X_ 9. Insurance company has a minimum rating of "A" by A.M. Best's Key Rating Guide, or other equivalent rating service(s).

_X_ 10. The Certificate of Insurance must state the project title.

___ 11. Other Insurance Requirements (State Below):

CERTIFICATE OF LIABILITY INSURANCE

DATE (MM/DD/YYYY): 9/15/2023

THIS CERTIFICATE IS ISSUED AS A MATTER OF INFORMATION ONLY AND CONFERS NO RIGHTS UPON THE CERTIFICATE HOLDER. THIS CERTIFICATE DOES NOT AFFIRMATIVELY OR NEGATIVELY AMEND, EXTEND OR ALTER THE COVERAGE AFFORDED BY THE POLICIES BELOW. THIS CERTIFICATE OF INSURANCE DOES NOT CONSTITUTE A CONTRACT BETWEEN THE ISSUING INSURER(S), AUTHORIZED REPRESENTATIVE OR PRODUCER, AND THE CERTIFICATE HOLDER.

IMPORTANT: If the certificate holder is an ADDITIONAL INSURED, the policy(ies) must have ADDITIONAL INSURED provisions or be endorsed. If SUBROGATION IS WAIVED, subject to the terms and conditions of the policy, certain policies may require an endorsement. A statement on this certificate does not confer rights to the certificate holder in lieu of such endorsement(s).

PRODUCER Hylant - Cincinnati 50 E-Business Way, Ste 420 Cincinnati OH 45241 License#: 23894	**CONTACT NAME:** Amy Cochran **PHONE (A/C, No, Ext):** 513-985-2400 **FAX (A/C, No):** 513-985-2404 **E-MAIL ADDRESS:** amy.cochran@hylant.com
INSURED North Texas Winwater Co. 1000 & 1010 Industrial Way Drive Anna, TX 75409 WINWHOL-01	**INSURER(S) AFFORDING COVERAGE** — **NAIC #** INSURER A : Sentry Insurance Company — 24988 INSURER B : Sentry Casualty Co — 28460 INSURER C : Lexington Insurance Company — 19437 INSURER D : INSURER E : INSURER F :

COVERAGES **CERTIFICATE NUMBER:** 1603474913 **REVISION NUMBER:**

THIS IS TO CERTIFY THAT THE POLICIES OF INSURANCE LISTED BELOW HAVE BEEN ISSUED TO THE INSURED NAMED ABOVE FOR THE POLICY PERIOD INDICATED. NOTWITHSTANDING ANY REQUIREMENT, TERM OR CONDITION OF ANY CONTRACT OR OTHER DOCUMENT WITH RESPECT TO WHICH THIS CERTIFICATE MAY BE ISSUED OR MAY PERTAIN, THE INSURANCE AFFORDED BY THE POLICIES DESCRIBED HEREIN IS SUBJECT TO ALL THE TERMS, EXCLUSIONS AND CONDITIONS OF SUCH POLICIES. LIMITS SHOWN MAY HAVE BEEN REDUCED BY PAID CLAIMS.

INSR LTR	TYPE OF INSURANCE	ADDL INSD	SUBR WVD	POLICY NUMBER	POLICY EFF (MM/DD/YYYY)	POLICY EXP (MM/DD/YYYY)	LIMITS	
A	X COMMERCIAL GENERAL LIABILITY CLAIMS-MADE [X] OCCUR GEN'L AGGREGATE LIMIT APPLIES PER: POLICY [ ] PRO-JECT [X] LOC OTHER:			9016981005	10/1/2023	10/1/2024	EACH OCCURRENCE DAMAGE TO RENTED PREMISES (Ea occurrence) MED EXP (Any one person) PERSONAL & ADV INJURY GENERAL AGGREGATE PRODUCTS - COMP/OP AGG 	$ 2,000,000 $ 2,000,000 $ 0 $ 2,000,000 $ 4,000,000 $ 4,000,000 $
A A	AUTOMOBILE LIABILITY X ANY AUTO OWNED AUTOS ONLY [ ] SCHEDULED AUTOS X HIRED AUTOS ONLY [X] NON-OWNED AUTOS ONLY			9016981003-AOS 9016981004-MA only	10/1/2023 10/1/2023	10/1/2024 10/1/2024	COMBINED SINGLE LIMIT (Ea accident) BODILY INJURY (Per person) BODILY INJURY (Per accident) PROPERTY DAMAGE (Per accident) 	$ 1,000,000 $ $ $ $
C	[ ] UMBRELLA LIAB [X] OCCUR X EXCESS LIAB [ ] CLAIMS-MADE DED [X] RETENTION $ 0			011170865	10/1/2023	10/1/2024	EACH OCCURRENCE AGGREGATE 	$ 1,000,000 $ 1,000,000 $
B B	WORKERS COMPENSATION AND EMPLOYERS' LIABILITY Y / N ANYPROPRIETOR/PARTNER/EXECUTIVE OFFICER/MEMBER EXCLUDED? [ ] N / A (Mandatory in NH) If yes, describe under DESCRIPTION OF OPERATIONS below			9016981001-AOS 9016981002-WI only	10/1/2023 10/1/2023	10/1/2024 10/1/2024	PER STATUTE [ ] OTH-ER E.L. EACH ACCIDENT E.L. DISEASE - EA EMPLOYEE E.L. DISEASE - POLICY LIMIT	 $ 1,000,000 $ 1,000,000 $ 1,000,000

DESCRIPTION OF OPERATIONS / LOCATIONS / VEHICLES (ACORD 101, Additional Remarks Schedule, may be attached if more space is required)

CERTIFICATE HOLDER

Proof of Coverage

CANCELLATION

SHOULD ANY OF THE ABOVE DESCRIBED POLICIES BE CANCELLED BEFORE THE EXPIRATION DATE THEREOF, NOTICE WILL BE DELIVERED IN ACCORDANCE WITH THE POLICY PROVISIONS.

AUTHORIZED REPRESENTATIVE

Nicholas R Hylant

© 1988-2015 ACORD CORPORATION. All rights reserved.

The ACORD name and logo are registered marks of ACORD

Exhibit D

Affidavit of No Prohibited Interest

THE STATE OF TEXAS §

THE COUNTY OF COLLIN §

I, ZAC HANSEN, an authorized agent of Contractor, make this affidavit and hereby under oath state the following:

I, and/or a person or persons related to me, have the following interest in a business entity that would be affected by the work or decision under this Agreement (Check all that apply):

_____ Ownership of ten percent (10%) or more of the voting shares of the business entity.

_____ Ownership of Twenty-Five Thousand and 00/100 Dollars ($25,000) or more of the fair market value of the business entity.

_____ Funds received from the business entity exceed ten percent (10%) of my income for the previous year.

_____ Real property is involved, and I have an equitable or legal ownership with a fair market value of at least Twenty-Five Thousand and 00/100 Dollars ($25,000).

_____ A relative of mine has a substantial interest in the business entity or property that would be affected by my business decision of the public body which I am a member.

_____ Other: _____.

__X__ None of the Above.

Upon filing this affidavit with the City of Sherman, Texas, I further affirm that no relative of mine, in the first degree by consanguinity or affinity, as defined in Chapter 573, TEX. GOV'T CODE, as amended, is a member of a public body which took action on the agreement.

Signed this 22 day of MARCH, 2024.

_____ PRESIDENT
Signature of Official/Title

BEFORE ME, the undersigned authority, this day personally appeared ADAM TEPE, and on oath stated that the facts hereinabove stated are true to the best of his/her knowledge or belief.

Sworn to and subscribed before me on this 22nd day of MARCH, 2024.

_____
Notary Public in and for the State of TEXAS
My commission expires: JUNE 13, 2027

ADAM TEPE
Notary ID #134404116
My Commission Expires
June 13, 2027

CONFLICT OF INTEREST QUESTIONNAIRE

FORM CIQ

For vendor doing business with local governmental entity

This questionnaire reflects changes made to the law by H.B. 23, 84th Leg., Regular Session.

This questionnaire is being filed in accordance with Chapter 176, Local Government Code, by a vendor who has a business relationship as defined by Section 176.001(1-a) with a local governmental entity and the vendor meets requirements under Section 176.006(a).

By law this questionnaire must be filed with the records administrator of the local governmental entity not later than the 7th business day after the date the vendor becomes aware of facts that require the statement to be filed. *See* Section 176.006(a-1), Local Government Code.

A vendor commits an offense if the vendor knowingly violates Section 176.006, Local Government Code. An offense under this section is a misdemeanor.

OFFICE USE ONLY

Date Received

1 **Name of vendor who has a business relationship with local governmental entity.**

NORTH TEXAS WINWATER CO.

2 ☐ **Check this box if you are filing an update to a previously filed questionnaire.** (The law requires that you file an updated completed questionnaire with the appropriate filing authority not later than the 7th business day after the date on which you became aware that the originally filed questionnaire was incomplete or inaccurate.)

3 **Name of local government officer about whom the information is being disclosed.**

_____

Name of Officer

4 **Describe each employment or other business relationship with the local government officer, or a family member of the officer, as described by Section 176.003(a)(2)(A). Also describe any family relationship with the local government officer. Complete subparts A and B for each employment or business relationship described. Attach additional pages to this Form CIQ as necessary.**

N/A

A. Is the local government officer or a family member of the officer receiving or likely to receive taxable income, other than investment income, from the vendor?

☐ Yes ☐ No

B. Is the vendor receiving or likely to receive taxable income, other than investment income, from or at the direction of the local government officer or a family member of the officer AND the taxable income is not received from the local governmental entity?

☐ Yes ☐ No

5 **Describe each employment or business relationship that the vendor named in Section 1 maintains with a corporation or other business entity with respect to which the local government officer serves as an officer or director, or holds an ownership interest of one percent or more.**

6 ☐ Check this box if the vendor has given the local government officer or a family member of the officer one or more gifts as described in Section 176.003(a)(2)(B), excluding gifts described in Section 176.003(a-1).

7 _____ 3/22/24

Signature of vendor doing business with the governmental entity — Date

CONFLICT OF INTEREST QUESTIONNAIRE

For vendor doing business with local governmental entity

A complete copy of Chapter 176 of the Local Government Code may be found at http://www.statutes.legis.state.tx.us/Docs/LG/htm/LG.176.htm. For easy reference, below are some of the sections cited on this form.

Local Government Code § 176.001(1-a): "Business relationship" means a connection between two or more parties based on commercial activity of one of the parties. The term does not include a connection based on:

(A) a transaction that is subject to rate or fee regulation by a federal, state, or local governmental entity or an agency of a federal, state, or local governmental entity;

(B) a transaction conducted at a price and subject to terms available to the public; or

(C) a purchase or lease of goods or services from a person that is chartered by a state or federal agency and that is subject to regular examination by, and reporting to, that agency.

Local Government Code § 176.003(a)(2)(A) and (B):

(a) A local government officer shall file a conflicts disclosure statement with respect to a vendor if:

***

(2) the vendor:

(A) has an employment or other business relationship with the local government officer or a family member of the officer that results in the officer or family member receiving taxable income, other than investment income, that exceeds $2,500 during the 12-month period preceding the date that the officer becomes aware that

(i) a contract between the local governmental entity and vendor has been executed; or

(ii) the local governmental entity is considering entering into a contract with the vendor;

(B) has given to the local government officer or a family member of the officer one or more gifts that have an aggregate value of more than $100 in the 12-month period preceding the date the officer becomes aware that:

(i) a contract between the local governmental entity and vendor has been executed; or

(ii) the local governmental entity is considering entering into a contract with the vendor.

Local Government Code § 176.006(a) and (a-1)

(a) A vendor shall file a completed conflict of interest questionnaire if the vendor has a business relationship with a local governmental entity and:

(1) has an employment or other business relationship with a local government officer of that local governmental entity, or a family member of the officer, described by Section 176.003(a)(2)(A);

(2) has given a local government officer of that local governmental entity, or a family member of the officer, one or more gifts with the aggregate value specified by Section 176.003(a)(2)(B), excluding any gift described by Section 176.003(a-1); or

(3) has a family relationship with a local government officer of that local governmental entity.

(a-1) The completed conflict of interest questionnaire must be filed with the appropriate records administrator not later than the seventh business day after the later of:

(1) the date that the vendor:

(A) begins discussions or negotiations to enter into a contract with the local governmental entity; or

(B) submits to the local governmental entity an application, response to a request for proposals or bids, correspondence, or another writing related to a potential contract with the local governmental entity; or

(2) the date the vendor becomes aware:

(A) of an employment or other business relationship with a local government officer, or a family member of the officer, described by Subsection (a);

(B) that the vendor has given one or more gifts described by Subsection (a); or

(C) of a family relationship with a local government officer.

TEXAS ETHICS FORM 1295 & VERIFICATION FORM 2270

NOTE: TEC Form 1295 will not be required for all submitting contractors, but, will be required from the recommended contractor prior to award. Verification Form 2270 is required with all proposal submittals. See next page for forms.

INSTRUCTIONS for
State Law Mandated Certificate of Interested Parties Form (Form 1295)

1. Pursuant to House Bill 1295 passed by the 84th Texas Legislature (Section 2252.908, Texas Government Code, as amended) and formal rules released by the Texas Ethics Commission (TEC), all contracts with private business entities requiring approval by the Sherman City Council must be accompanied by an original signature unsworn declaration, Certificate of Interested Parties, Form 1295.

2. Form 1295 must be completed in accordance with the TEC Rules: (https://www.ethics.state.tx.us/legal/ch46.html) and Section 2252.908 of the Texas Government Code, as amended: (http://www.legis.state.tx.us/tlodocs/84R/billtext/html/HB01295F.htm).

3. For questions or issues regarding the TEC rules and state law provisions and how Form 1295 should be completed, please consult with your own legal counsel.

4. In order to fill out and submit Form 1295, you will need to log in as directed on the TEC website: https://www.ethics.state.tx.us/whatsnew/elf info form1295.htm

   Tutorials for creating an account and for creating and submitting Form 1295 may also be found on this web page.

5. Please provide the bolded information exactly as it appears below when creating your certificate:

   Who is the contract with? Click the button for **Other**

   Governmental Entity

   Agency/Entity Name: **City of Sherman**

   Contract ID Number: **2022-07**

   Description of Goods and Services to be provided: **Annual Supply of Water & Sewer Parts and Supplies**

6. All other fields as required or as applicable to the individual vendor must be completed as explained in the tutorial video.

7. Vendors must provide a signed, original signature copy of this form along with four signed, notarized, original signature copies of the contract no later than 14 days after Notice of Recommendation for Award is received. All documents shall be signed by an Officer, Director or other Authorized Agent of the company. If the individual signing as Authorized Agent is not an officer or director of the company, appropriate documentation must be included with these documents to confirm that the individual has the authority to bind the company contractually.

rev. 1/26/2018

VERIFICATION REQUIRED BY TEXAS GOVERNMENT CODE CHAPTER 2270

By signing below, the signatory hereby verifies that the firm it represents:

1. Does not boycott Israel; and,

2. Will not boycott Israel during the term of the contract.

SIGNED BY: _____

Print Name & Title: ZAC HANSON / PRESIDENT

Firm Name: NORTH TEXAS WINWATER CO.

Date Signed: 3/22/2024

NOTARIZATION

ADAM TEPE
Notary ID #134404116
My Commission Expires
June 13, 2027

THE STATE OF TEXAS)
)
COUNTY OF COLLIN)

BEFORE ME, the undersigned notary public on this day personally appeared ADAM TEPE, on behalf of NORTH TEXAS WINWATER (Company), who, being duly sworn, stated under oath that he/she has read the foregoing verification required by Texas Government Code Section 2270.002 and said statements contained therein are true and correct.

SWORN TO AND SUBSCRIBED before me on the 22nd day of MARCH, 2024.

_____
NOTARY PUBLIC IN AND
FOR THE STATE OF TEXAS

The following definitions apply to Texas Government Code Section 2270.001:

(1) "Boycott Israel" means refusing to deal with, terminating business activities with, or otherwise taking any action that is intended to penalize, inflict economic harm on, or limit commercial relations specifically with Israel, or with a person or entity doing business in Israel or in an Israeli-controlled territory, but does not include an action made for ordinary business purposes; and

(2) "Company" means a for-profit sole proprietorship, organization, association, corporation, partnership, joint venture, limited partnership, limited liability partnership, or limited liability company, including a wholly owned subsidiary, majority-owned subsidiary, parent company, or affiliate of those entities or business associations that exists to make a profit.

State law requires any firm entering into an agreement or contract with the Authority to complete the foregoing verification. TEX. GOV'T CODE § 2270.002.

CERTIFICATE OF INTERESTED PARTIES

FORM 1295

Complete Nos. 1 - 4 and 6 if there are interested parties.
Complete Nos. 1, 2, 3, 5, and 6 if there are no interested parties.

OFFICE USE ONLY
CERTIFICATION OF FILING

Certificate Number:
2024-1138009

Date Filed:
03/22/2024

Date Acknowledged:

1 Name of business entity filing form, and the city, state and country of the business entity's place of business.
North Texas Winwater Co.
Anna, TX United States

2 Name of governmental entity or state agency that is a party to the contract for which the form is being filed.
City of Sherman

3 Provide the identification number used by the governmental entity or state agency to track or identify the contract, and provide a description of the services, goods, or other property to be provided under the contract.
2022-07
Annual Supply of Water & Sewer Parts & Supplies

4 Name of Interested Party	City, State, Country (place of business)	Nature of interest (check applicable)	
		Controlling	Intermediary

5 Check only if there is NO Interested Party. [X]

6 UNSWORN DECLARATION

My name is Zac Hanlon, and my date of birth is 09/16/1992.

My address is 1010 Industrial Way Dr., Anna, TX, 75409, USA.
(street) (city) (state) (zip code) (country)

I declare under penalty of perjury that the foregoing is true and correct.

Executed in Collin County, State of TX, on the 22 day of March, 2024.
(month) (year)

Signature of authorized agent of contracting business entity
(Declarant)

AGREEMENT FOR WATER AND SEWER MAINTENANCE PARTS AND SUPPLIES

The **City of Sherman, Texas**, a home-rule municipality ("City"), and North Texas Winwater a _____ ("Contractor"), hereby enter into this Agreement for water and sewer maintenance parts and supplies ("Agreement"). City and Contractor are sometimes referred to collectively as the "parties" or individually as a "party."

WHEREAS, City issued a Request for Proposal, attached hereto as Exhibit A and incorporated herein for all purposes ("Bid Request"), seeking competitive sealed bids for water and sewer maintenance parts and supplies for the City; and

WHEREAS, Contractor timely submitted a sealed response to the Bid Request, attached hereto as Exhibit B and incorporated herein for all purposes ("Submittal"), seeking to provide such services for City; and

WHEREAS, based on Contractor's representations in response to the Bid Request, including those representations set forth in the Submittal, City has selected Contractor to provide the services sought in the Bid Request under the terms and conditions of this Agreement ("Project").

NOW, THEREFORE, in consideration of the mutual agreements and covenants contained herein and other good and valuable consideration, the receipt and sufficiency of which are hereby acknowledged, the parties agree as follows:

1. Scope of Services.
   Contractor shall provide the services and deliverables that are described in the Agreement Documents (as defined below) and shall furnish all personnel, labor, equipment, supplies and all other items necessary to provide the services and deliverables as specified by the terms and conditions of the Agreement Documents (collectively, "Services").

2. Term.
   The initial term of the Agreement shall be for a period of one (1) year, commencing on the Effective Date (hereinafter defined) of this Agreement ("Initial Term"). City shall have the option to extend this Agreement for four (4) additional terms of one (1) year each (each a "Renewal Term") on the same terms and conditions of this Agreement by giving Contractor written notice of its intent to extend prior to the expiration of the then-current one (1) year term.

3. Compensation.
   In exchange for Contractor's performance of the Services in accordance with the Agreement Document, City agrees to pay Contractor on the basis defined by and in the amounts set forth in the Submittal ("Contractor's Fee").

   City shall pay Contractor within thirty (30) days of receipt of each invoice, unless supporting receipts or other supporting documentation have been requested by City, in which case City shall pay the invoice as soon after receiving the supporting receipts or

documentation as is reasonable; or unless a dispute arises as to any charge(s) contained in the invoice, in which case City shall pay the undisputed amount of the invoice within thirty (30) days of receipt and shall pay the remaining amount, if any, of the invoice after resolution of the dispute as soon after resolution as is reasonable. Notwithstanding anything to the contrary in the Agreement Documents, City shall not be required to pay any invoice submitted by Contractor if Contractor is in breach of this Agreement.

The parties agree that the continuation of this Agreement after the close of any given fiscal year of City, which closes on September 30th of each calendar year, shall be subject to City Council approval. In the event that the City Council does not approve the appropriation of funds for this Agreement, the Agreement shall terminate at the end of the fiscal year for which funds were appropriated, and the parties shall have no further obligations hereunder, except that City shall be obligated to pay monies owed Contractor for services it has provided pursuant to this Agreement through the end of that fiscal year provided that Contractor is not in breach of this Agreement.

4. Agreement Documents.

The "Agreement Documents," as that term is used herein, shall mean and include the following documents, and this Agreement expressly incorporates the same herein by reference for all purposes:

A. This Agreement;

B. The Bid Request, attached hereto as Exhibit A;

C. The Submittal, attached hereto as Exhibit B;

D. City's Insurance Requirements, attached hereto as Exhibit C;

E. Affidavit of No Prohibited Interested, attached hereto as Exhibit D; and

F. Conflict of Interest Questionnaire, attached hereto as Exhibit E.

This Agreement shall incorporate the terms of the Agreement Documents in their entirety. To the extent that Exhibit A, Exhibit B, Exhibit C, Exhibit D or Exhibit E are in conflict with provisions of this Agreement or each other, the provisions of this Agreement, then the provisions of Exhibit A, Exhibit C, Exhibit D, Exhibit E and Exhibit B shall prevail in that order. Should disputes arise as to responsibilities and obligations set forth in the Agreement Documents, City's interpretation and/or decision shall be final and binding.

5. Entire Agreement.

The Agreement Documents contain all representations, understandings, contracts and agreements between the parties regarding the subject matter of this Agreement. The Agreement Documents supersede all oral or written previous and contemporaneous agreements, writings, understandings, representations or contracts between the parties regarding the subject matter of this Agreement. This Agreement in no way modifies or

supersedes any document executed by the parties prior to the Effective Date of this Agreement which does not concern the subject matter of this Agreement. No amendment to the Agreement Documents shall be made except on the written agreement of the parties, which shall not be construed to release either party from any obligation of the Agreement Documents except as specifically provided for in such amendment.

6. Required Insurance.

Contractor shall not start work under this Agreement until Contractor has obtained, at Contractor's expense, all of the insurance specified in, and required by, the Agreement Documents. Contractor shall procure and keep in full force and effect the types and amounts of insurance specified in City's Insurance Requirements, attached hereto as Exhibit C and incorporated herein for all purposes, for and during all aspects and phases of Contractor's work throughout the term of this Agreement at no expense to City. Contractor also shall comply with all other requirements set forth in Exhibit C.

7. No Prohibited Interest; Vendor Disclosure.

Contractor acknowledges and agrees that it is aware of, and will abide by, the no prohibited interest requirement of the City Charter. Contractor shall execute and deliver to City the Affidavit of No Prohibited Interest, attached hereto as Exhibit D and incorporated herein for all purposes, no later than the Effective Date of this Agreement (hereinafter defined). Contractor acknowledges and agrees that the existence of a prohibited interest during the term of this Agreement will render this Agreement voidable. Contractor further acknowledges and agrees that it also is aware of, and will abide by, the vendor disclosure requirements set forth in Chapter 176 of the Texas Local Government Code, as amended. In this connection, Contractor shall execute and deliver to City the Conflict of Interest Questionnaire, Form CIQ, attached hereto as Exhibit E and incorporated herein for all purposes, no later than the Effective Date of this Agreement.

8. Indemnity.

CONTRACTOR HEREBY RELEASES AND SHALL DEFEND, INDEMNIFY AND HOLD HARMLESS CITY AND ITS CITY COUNCIL MEMBERS, OFFICERS, AGENTS, REPRESENTATIVES AND EMPLOYEES (COLLECTIVELY REFERRED TO AS "CITY" FOR PURPOSES OF THIS SECTION) FROM AND AGAINST ALL DAMAGES, INJURIES (WHETHER IN CONTRACT OR IN TORT, INCLUDING PERSONAL INJURY AND DEATH), CLAIMS, PROPERTY DAMAGES (INCLUDING LOSS OF USE), LOSSES, DEMANDS, SUITS, ACTIONS, JUDGMENTS, LIENS, COSTS AND EXPENSES, INCLUDING REASONABLE ATTORNEY'S FEES AND EXPENSES (INCLUDING ATTORNEY'S FEES AND EXPENSES INCURRED IN ENFORCING THIS SECTION), THAT IN WHOLE OR IN PART ARISE OUT OF OR ARE CONNECTED WITH GOODS AND/OR SERVICES PROVIDED BY CONTRACTOR, ITS OFFICERS, AGENTS, REPRESENTATIVES, EMPLOYEES, SUBCONTRACTORS, LICENSEES, INVITEES OR ANY OTHER THIRD PARTIES FOR WHOM CONTRACTOR IS LEGALLY RESPONSIBLE (COLLECTIVELY REFERRED TO AS "CONTRACTOR" FOR PURPOSES OF THIS SECTION) PURSUANT TO THIS AGREEMENT AND/OR THE NEGLIGENT, GROSSLY NEGLIGENT AND/OR INTENTIONAL WRONGFUL ACT AND/OR OMISSION OF CONTRACTOR IN ITS/THEIR PERFORMANCE OF THIS AGREEMENT, REGARDLESS OF THE JOINT OR CONCURRENT NEGLIGENCE OF CITY (COLLECTIVELY, "CLAIMS"). THIS INDEMNIFICATION PROVISION AND THE USE OF THE TERM "CLAIMS" IS ALSO SPECIFICALLY INTENDED TO APPLY TO, BUT IS NOT LIMITED TO, ANY AND ALL CLAIMS, WHETHER CIVIL OR CRIMINAL, BROUGHT AGAINST CITY BY ANY GOVERNMENT AUTHORITY OR AGENCY RELATED TO ANY PERSON PROVIDING SERVICES UNDER THIS

AGREEMENT THAT ARE BASED ON ANY FEDERAL IMMIGRATION LAW AND ANY AND ALL CLAIMS, DEMANDS, DAMAGES, ACTIONS AND CAUSES OF ACTION OF EVERY KIND AND NATURE, KNOWN AND UNKNOWN, EXISTING OR CLAIMED TO EXIST, RELATING TO OR ARISING OUT OF ANY EMPLOYMENT RELATIONSHIP BETWEEN CONTRACTOR AND ITS EMPLOYEES OR SUBCONTRACTORS AS A RESULT OF THAT SUBCONTRACTOR'S OR EMPLOYEE'S EMPLOYMENT AND/OR SEPARATION FROM EMPLOYMENT WITH CONTRACTOR, INCLUDING BUT NOT LIMITED TO ANY DISCRIMINATION CLAIM BASED ON SEX, SEXUAL ORIENTATION OR PREFERENCE, RACE, RELIGION, COLOR, NATIONAL ORIGIN, AGE OR DISABILITY UNDER FEDERAL, STATE OR LOCAL LAW, RULE OR REGULATION, AND/OR ANY CLAIM FOR WRONGFUL TERMINATION, BACK PAY, FUTURE WAGE LOSS, OVERTIME PAY, EMPLOYEE BENEFITS, INJURY SUBJECT TO RELIEF UNDER THE WORKERS' COMPENSATION ACT OR WOULD BE SUBJECT TO RELIEF UNDER ANY POLICY FOR WORKERS COMPENSATION INSURANCE, AND ANY OTHER CLAIM, WHETHER IN TORT, CONTRACT OR OTHERWISE.

IN ITS SOLE DISCRETION, CITY SHALL HAVE THE RIGHT TO APPROVE OR SELECT DEFENSE COUNSEL TO BE RETAINED BY CONTRACTOR IN FULFILLING ITS OBLIGATION HEREUNDER TO DEFEND AND INDEMNIFY CITY, UNLESS SUCH RIGHT IS EXPRESSLY WAIVED BY CITY IN WRITING. CITY RESERVES THE RIGHT TO PROVIDE A PORTION OR ALL OF ITS OWN DEFENSE; HOWEVER, CITY IS UNDER NO OBLIGATION TO DO SO. ANY SUCH ACTION BY CITY IS NOT TO BE CONSTRUED AS A WAIVER OF CONTRACTOR'S OBLIGATION TO DEFEND CITY OR AS A WAIVER OF CONTRACTOR'S OBLIGATION TO INDEMNIFY CITY PURSUANT TO THIS AGREEMENT. CONTRACTOR SHALL RETAIN CITY-APPROVED DEFENSE COUNSEL WITHIN SEVEN (7) BUSINESS DAYS OF CITY'S WRITTEN NOTICE THAT CITY IS INVOKING ITS RIGHT TO DEFENSE OR INDEMNIFICATION UNDER THIS AGREEMENT. IF CONTRACTOR FAILS TO RETAIN COUNSEL WITHIN SUCH TIME PERIOD, CITY SHALL HAVE THE RIGHT TO RETAIN DEFENSE COUNSEL ON ITS OWN BEHALF, AND CONTRACTOR SHALL BE LIABLE FOR ALL COSTS INCURRED BY CITY.

THE RIGHTS AND OBLIGATIONS CREATED BY THIS SECTION SHALL SURVIVE TERMINATION OF THIS AGREEMENT.

9. Liability.

To the fullest extent permitted by law, Contractor shall be fully and solely responsible and liable for its own acts and omissions, including those of its officers, agents, representatives, employees, subcontractors, licensees, invitees and all other parties performing services for or on behalf of Contractor under this Agreement, and for any and all damage to Contractor's equipment and other property. City assumes no such responsibility or liability. City shall have no such responsibility or liability to either Contractor or its officers, agents, representatives, employees, subcontractors, licensees, invitees or other persons.

10. Compliance with Laws; Standard of Care.

Contractor shall comply with all federal, state and local laws, statutes, ordinances, regulations and policies, as they exist, may be amended or in the future arising, applicable to Contractor and its work. Contractor shall ensure that its officers, agents, representatives, employees, subcontractors, licensees, invitees and other parties performing services for or on behalf of Contractor under this Agreement comply with all applicable laws, statutes, ordinances, regulations and policies. If Contractor observes or is notified that the work under this Agreement is at variance with applicable laws, statutes, ordinances, regulations

and policies, Contractor shall immediately notify City in writing. Contractor shall perform the Services in accordance with the prevailing standard of care by exercising the skill and care ordinarily utilized by professionals performing the same or similar services under the same or similar circumstances in the State of Texas.

11. Termination.

City is entitled to terminate this Agreement at any time for any reason or for no reason by giving Contractor at least thirty (30) days' prior written notice of the termination date.

City is entitled to terminate this Agreement immediately on breach of any term or provision of the Agreement Documents by Contractor. If at any time during the term of this Agreement, Contractor shall fail to commence the work in accordance with the provisions of the Agreement Documents or fail to diligently perform the Services in an efficient, timely and careful manner and in strict accordance with the provisions of the Agreement Documents, then City shall have the right to terminate this Agreement and complete the work in any manner it deems desirable, including engaging the services of other parties, if Contractor does not cure any such default after five (5) days written notice thereof. Any such act by City shall not be deemed a waiver of any other right or remedy of City.

If after exercising any remedy provided herein, the cost to City of the performance of the balance of the work under this Agreement is in excess of that part of the Contractor's Fee which has not yet been paid to Contractor hereunder, Contractor shall be liable for and shall reimburse City for such excess, without waiver of any other right or remedy of City.

The rights and remedies provided by this Agreement are cumulative, and the use of any one right or remedy by either party shall not preclude or waive its rights to use any or all other remedies. These rights and remedies are given in addition to any other rights the parties may have by law, statute, ordinance or otherwise.

12. Authority to Execute.

Each party represents and warrants to the other that it has the full power and authority to enter into and fulfill the obligations of this Agreement. The respective signatories to this Agreement, by affixing their signatures hereto, warrant and represent that they have the authority to bind their respective parties as duly authorized representatives thereof.

13. Assignment.

Contractor agrees that neither this Agreement nor the work to be performed hereunder will be assigned or sublet without the prior written consent of City. Contractor further agrees that the assignment or subletting of any portion or feature of the work or materials required in the performance of this Agreement shall not relieve Contractor of its full obligations to City as provided by this Agreement. All such approved work performed by assignment or subletting shall be billed through Contractor, and there shall be no third-party billing.

14. No Waiver of Immunity.

The parties acknowledge and agree that, in executing and performing this Agreement, City has not waived, nor shall be deemed to have waived, any defense or immunity, including governmental, sovereign and official immunity, that would otherwise be available to it against claims arising in the exercise of governmental powers and functions. By entering into this Agreement, the parties do not create any obligations, express or implied, other than those set forth herein.

15. Savings/Severability.
In the event that a term, condition or provision of this Agreement is determined to be invalid, illegal, void, unenforceable or unlawful by a court of competent jurisdiction, then that term, condition or provision shall be deleted and the remainder of the Agreement shall remain in full force and effect as if such invalid, illegal, void, unenforceable or unlawful provision had never been included in this Agreement.

16. Consideration.
This Agreement is executed by the parties without coercion or duress and for substantial consideration, the sufficiency of which is forever confessed.

17. Attorneys' Fees.
If either party files any action or brings any proceeding against the other arising from this Agreement, then as between City and Contractor, the prevailing party shall be entitled to recover as an element of its costs of suit, and not as damages, reasonable and necessary attorneys' fees and litigation expenses both at trial and on appeal, subject to the limitations set forth in the TEX. LOC. GOV'T CODE § 271.153, as it exists or may be amended, if applicable.

18. Governing Law; Venue.
The laws of the State of Texas shall govern the interpretation, validity, performance and enforcement of this Agreement, without regard to conflict of law principles. This Agreement is performable in Grayson County, Texas, and the exclusive venue for any action arising out of this Agreement shall be a court of appropriate jurisdiction in Grayson County, Texas.

19. Binding Effect.
This Agreement shall be binding on and inure to the benefit of the parties and their respective heirs, executors, administrators, legal representatives, successors and assigns when permitted by this Agreement.

20. No Waiver.
Waiver by either party of any breach of this Agreement, or the failure of either party to enforce any of the provisions of this Agreement, at any time, shall not in any way affect, limit, or waive such party's right thereafter to enforce and compel strict compliance.

21. Headings.
The headings of the various sections of this Agreement are included solely for convenience of reference and are not to be full or accurate descriptions of the content thereof.

22. Indemnity.
The parties agree that the indemnity provision set forth in Section 8 herein is conspicuous and the parties have read and understood the same.

23. Notice.
Any notice provided or permitted to be given under this Agreement must be in writing and may be served by depositing the same in the United States Mail, addressed to the party to be notified, postage pre-paid and registered or certified with return receipt requested; by facsimile; by electronic mail, with documentation evidencing the addressee's receipt thereof; or by delivering the same in person to such party a via hand-delivery service, or to any courier service that provides a return receipt showing the date of actual delivery of the same to the addressee thereof. Notice given in accordance herewith shall be effective on receipt at the address of the addressee. For purposes of notification, the addresses of the parties shall be as follows:

If to Contractor, to: _____
Attn:_____
Address:_____
_____
Telephone:_____
Facsimile:_____
Email:_____

If to City, to: City of Sherman
Attn: Robby Hefton, City Manager
220 W. Mulberry Street
Sherman, Texas 75090
Telephone: (903) 892-7201
Facsimile: (903) 892-7355
Email: robbyh@cityofsherman.com

With a copy to:
Abernathy, Roeder, Boyd & Hullett, P.C.
Attn.: Ryan D. Pittman
1700 Redbud Blvd., Suite 300
McKinney, Texas 75069
Telephone: (214) 544-4000
Facsimile: (214) 544-4054
Email: rpittman@abernathy-law.com

24. Representations.
Each party states that they have carefully read this Agreement, know the contents hereof, have consulted with an attorney of their choice regarding the meaning and effect hereof and is signing the same solely of their own judgment.

25. Independent Contractor.
Contractor covenants and agrees that Contractor is an independent contractor and not an officer, agent, servant or employee of City; that Contractor shall have exclusive control of and exclusive right to control the details of the work performed hereunder and all persons performing the same; that the doctrine of respondent superior shall not apply as between City and Contractor, its officers, agents, employees, contractors, subcontractors and consultants; and that nothing herein shall be construed as creating a partnership or joint enterprise between City and Contractor.

26. Incorporation of Recitals.
The representations, covenants and recitations set forth in the foregoing recitals of this Agreement are true and correct and are hereby incorporated into the body of this Agreement and adopted as findings of City and the authorized representative of Contractor.

27. Reference to Contractor.
When referring to "Contractor" herein, this Agreement shall refer to and be binding upon Contractor, and its officers, directors, partners, employees, representatives, contractors, subcontractors, licensees, invitees, agents, successors, assignees (as authorized herein), vendors, grantees, trustees, legal representatives and/or any other third parties for whom Contractor is legally responsible.

28. Reference to City.
When referring to "City" herein, this Agreement shall refer to and be binding upon City, its Council Members, officers, agents, representatives, employees and/or any other authorized third parties for whom City is legally responsible.

29. Miscellaneous Drafting Provisions.
This Agreement shall be deemed drafted equally by all parties hereto. The language of all parts of this Agreement shall be construed as a whole according to its fair meaning, and any presumption or principle that the language herein is to be construed against any party shall not apply. Headings in this Agreement are for the convenience of the parties and are not intended to be used in construing this document.

30. Multiple Counterparts.
This Agreement may be executed in a number of identical counterparts, each of which shall be deemed an original for all purposes. An electronic mail and/or facsimile signature will also be deemed to constitute an original if properly executed and delivered to the other party.

IN WITNESS WHEREOF, the parties have executed this Agreement and caused this Agreement to be effective when all the parties have signed it. The date this Agreement is signed by the last party to sign it (as indicated by the date associated with that party's signature below) will be deemed the effective date of this Agreement ("Effective Date").

CITY OF SHERMAN, TEXAS,
a home-rule municipality

By: _____
Robby Hefton, City Manager
Date: _____

ATTEST:

_____
Linda Ashby, City Clerk

_____
a Texas corporation

By: _____
Printed Name: _____
Title: _____
Date: _____

STATE OF TEXAS §
§
COUNTY OF GRAYSON §

BEFORE ME, the undersigned authority, on this day personally appeared **Robby Hefton**, known to me to be one of the persons whose names are subscribed to the foregoing instrument; he acknowledged to me he is the City Manager and duly authorized representative for the **City of Sherman, Texas** and he executed said instrument for the purposes and consideration therein expressed.

GIVEN UNDER MY HAND AND SEAL OF OFFICE this _____ day of _____, 202_.

_____
Notary Public in and for the State of Texas
My Commission Expires:_____

STATE OF TEXAS §
§
COUNTY OF _____ §

BEFORE ME, the undersigned authority, on this day personally appeared _____, known to me to be one of the persons whose names are subscribed to the foregoing instrument; he/she acknowledged to me he/she is the _____ (title) and duly authorized representative for _____, a Texas corporation, and that he/she executed said instrument for the purposes and consideration therein expressed.

GIVEN UNDER MY HAND AND SEAL OF OFFICE this _____ day of _____, 202_.

_____
Notary Public in and for the State of Texas
My Commission Expires:_____

Form **W-9**
(Rev. December 2014)
Department of the Treasury
Internal Revenue Service

Request for Taxpayer Identification Number and Certification

Give Form to the requester. Do not send to the IRS.

Print or type
See Specific Instructions on page 2.

1 Name (as shown on your income tax return). Name is required on this line; do not leave this line blank.
North Texas Winwater Co

2 Business name/disregarded entity name, if different from above

3 Check appropriate box for federal tax classification; check only **one** of the following seven boxes:
☐ Individual/sole proprietor or single-member LLC ☑ C Corporation ☐ S Corporation ☐ Partnership ☐ Trust/estate
☐ Limited liability company. Enter the tax classification (C=C corporation, S=S corporation, P=partnership) ▶
Note. For a single-member LLC that is disregarded, do not check LLC; check the appropriate box in the line above for the tax classification of the single-member owner.
☐ Other (see instructions) ▶

4 Exemptions (codes apply only to certain entities, not individuals; see instructions on page 3):
Exempt payee code (if any)
Exemption from FATCA reporting code (if any)
(Applies to accounts maintained outside the U.S.)

5 Address (number, street, and apt. or suite no.)
1010 Industrial Way Drive

Requester's name and address (optional)

6 City, state, and ZIP code
Anna, TX 75409

7 List account number(s) here (optional)

Part I Taxpayer Identification Number (TIN)

Enter your TIN in the appropriate box. The TIN provided must match the name given on line 1 to avoid backup withholding. For individuals, this is generally your social security number (SSN). However, for a resident alien, sole proprietor, or disregarded entity, see the Part I instructions on page 3. For other entities, it is your employer identification number (EIN). If you do not have a number, see *How to get a TIN* on page 3.

Note. If the account is in more than one name, see the instructions for line 1 and the chart on page 4 for guidelines on whose number to enter.

Social security number
[ ][ ][ ] – [ ][ ] – [ ][ ][ ][ ]

or

Employer identification number
8 7 – 4 1 9 5 4 3 2

Part II Certification

Under penalties of perjury, I certify that:

1. The number shown on this form is my correct taxpayer identification number (or I am waiting for a number to be issued to me); and
2. I am not subject to backup withholding because: (a) I am exempt from backup withholding, or (b) I have not been notified by the Internal Revenue Service (IRS) that I am subject to backup withholding as a result of a failure to report all interest or dividends, or (c) the IRS has notified me that I am no longer subject to backup withholding; and
3. I am a U.S. citizen or other U.S. person (defined below); and
4. The FATCA code(s) entered on this form (if any) indicating that I am exempt from FATCA reporting is correct.

Certification instructions. You must cross out item 2 above if you have been notified by the IRS that you are currently subject to backup withholding because you have failed to report all interest and dividends on your tax return. For real estate transactions, item 2 does not apply. For mortgage interest paid, acquisition or abandonment of secured property, cancellation of debt, contributions to an individual retirement arrangement (IRA), and generally, payments other than interest and dividends, you are not required to sign the certification, but you must provide your correct TIN. See the instructions on page 3.

Sign Here Signature of U.S. person ▶ Zac Hansen Date ▶ 01/03/2024

General Instructions

Section references are to the Internal Revenue Code unless otherwise noted.

Future developments. Information about developments affecting Form W-9 (such as legislation enacted after we release it) is at *www.irs.gov/fw9*.

Purpose of Form

An individual or entity (Form W-9 requester) who is required to file an information return with the IRS must obtain your correct taxpayer identification number (TIN) which may be your social security number (SSN), individual taxpayer identification number (ITIN), adoption taxpayer identification number (ATIN), or employer identification number (EIN), to report on an information return the amount paid to you, or other amount reportable on an information return. Examples of information returns include, but are not limited to, the following:

- Form 1099-INT (interest earned or paid)
- Form 1099-DIV (dividends, including those from stocks or mutual funds)
- Form 1099-MISC (various types of income, prizes, awards, or gross proceeds)
- Form 1099-B (stock or mutual fund sales and certain other transactions by brokers)
- Form 1099-S (proceeds from real estate transactions)
- Form 1099-K (merchant card and third party network transactions)
- Form 1098 (home mortgage interest), 1098-E (student loan interest), 1098-T (tuition)
- Form 1099-C (canceled debt)
- Form 1099-A (acquisition or abandonment of secured property)

Use Form W-9 only if you are a U.S. person (including a resident alien), to provide your correct TIN.

If you do not return Form W-9 to the requester with a TIN, you might be subject to backup withholding. See *What is backup withholding?* on page 2.

By signing the filled-out form, you:

1. Certify that the TIN you are giving is correct (or you are waiting for a number to be issued),
2. Certify that you are not subject to backup withholding, or
3. Claim exemption from backup withholding if you are a U.S. exempt payee. If applicable, you are also certifying that as a U.S. person, your allocable share of any partnership income from a U.S. trade or business is not subject to the withholding tax on foreign partners' share of effectively connected income, and
4. Certify that FATCA code(s) entered on this form (if any) indicating that you are exempt from the FATCA reporting, is correct. See *What is FATCA reporting?* on page 2 for further information.

ACORD®

CERTIFICATE OF LIABILITY INSURANCE

DATE (MM/DD/YYYY): 9/15/2023

THIS CERTIFICATE IS ISSUED AS A MATTER OF INFORMATION ONLY AND CONFERS NO RIGHTS UPON THE CERTIFICATE HOLDER. THIS CERTIFICATE DOES NOT AFFIRMATIVELY OR NEGATIVELY AMEND, EXTEND OR ALTER THE COVERAGE AFFORDED BY THE POLICIES BELOW. THIS CERTIFICATE OF INSURANCE DOES NOT CONSTITUTE A CONTRACT BETWEEN THE ISSUING INSURER(S), AUTHORIZED REPRESENTATIVE OR PRODUCER, AND THE CERTIFICATE HOLDER.

IMPORTANT: If the certificate holder is an ADDITIONAL INSURED, the policy(ies) must have ADDITIONAL INSURED provisions or be endorsed. If SUBROGATION IS WAIVED, subject to the terms and conditions of the policy, certain policies may require an endorsement. A statement on this certificate does not confer rights to the certificate holder in lieu of such endorsement(s).

PRODUCER Hylant - Cincinnati 50 E-Business Way, Ste 420 Cincinnati OH 45241 License#: 23894	**CONTACT NAME:** Amy Cochran **PHONE (A/C, No, Ext):** 513-985-2400 **FAX (A/C, No):** 513-985-2404 **E-MAIL ADDRESS:** amy.cochran@hylant.com
INSURED North Texas Winwater Co. 1000 & 1010 Industrial Way Drive Anna, TX 75409 WINWHOL-01	**INSURER(S) AFFORDING COVERAGE** — **NAIC #** INSURER A : Sentry Insurance Company — 24988 INSURER B : Sentry Casualty Co — 28460 INSURER C : Lexington Insurance Company — 19437 INSURER D : INSURER E : INSURER F :

COVERAGES **CERTIFICATE NUMBER:** 1603474913 **REVISION NUMBER:**

THIS IS TO CERTIFY THAT THE POLICIES OF INSURANCE LISTED BELOW HAVE BEEN ISSUED TO THE INSURED NAMED ABOVE FOR THE POLICY PERIOD INDICATED. NOTWITHSTANDING ANY REQUIREMENT, TERM OR CONDITION OF ANY CONTRACT OR OTHER DOCUMENT WITH RESPECT TO WHICH THIS CERTIFICATE MAY BE ISSUED OR MAY PERTAIN, THE INSURANCE AFFORDED BY THE POLICIES DESCRIBED HEREIN IS SUBJECT TO ALL THE TERMS, EXCLUSIONS AND CONDITIONS OF SUCH POLICIES. LIMITS SHOWN MAY HAVE BEEN REDUCED BY PAID CLAIMS.

INSR LTR	TYPE OF INSURANCE	ADDL INSD	SUBR WVD	POLICY NUMBER	POLICY EFF (MM/DD/YYYY)	POLICY EXP (MM/DD/YYYY)	LIMITS	
A	X COMMERCIAL GENERAL LIABILITY			9016981005	10/1/2023	10/1/2024	EACH OCCURRENCE	$ 2,000,000
	CLAIMS-MADE X OCCUR						DAMAGE TO RENTED PREMISES (Ea occurrence)	$ 2,000,000
							MED EXP (Any one person)	$ 0
							PERSONAL & ADV INJURY	$ 2,000,000
	GEN'L AGGREGATE LIMIT APPLIES PER:						GENERAL AGGREGATE	$ 4,000,000
	POLICY PRO-JECT X LOC						PRODUCTS - COMP/OP AGG	$ 4,000,000
	OTHER:							$
A	AUTOMOBILE LIABILITY			9016981003-AOS	10/1/2023	10/1/2024	COMBINED SINGLE LIMIT (Ea accident)	$ 1,000,000
A	X ANY AUTO			9016981004-MA only	10/1/2023	10/1/2024	BODILY INJURY (Per person)	$
	OWNED AUTOS ONLY / SCHEDULED AUTOS						BODILY INJURY (Per accident)	$
	X HIRED AUTOS ONLY / X NON-OWNED AUTOS ONLY						PROPERTY DAMAGE (Per accident)	$
								$
C	UMBRELLA LIAB X OCCUR			011170865	10/1/2023	10/1/2024	EACH OCCURRENCE	$ 1,000,000
	X EXCESS LIAB / CLAIMS-MADE						AGGREGATE	$ 1,000,000
	DED X RETENTION $ 0							$
B	WORKERS COMPENSATION AND EMPLOYERS' LIABILITY Y / N			9016981001-AOS	10/1/2023	10/1/2024	PER STATUTE / OTH-ER	
B	ANY PROPRIETOR/PARTNER/EXECUTIVE OFFICER/MEMBER EXCLUDED? (Mandatory in NH)	N / A		9016981002-WI only	10/1/2023	10/1/2024	E.L. EACH ACCIDENT	$ 1,000,000
	If yes, describe under DESCRIPTION OF OPERATIONS below						E.L. DISEASE - EA EMPLOYEE	$ 1,000,000
							E.L. DISEASE - POLICY LIMIT	$ 1,000,000

DESCRIPTION OF OPERATIONS / LOCATIONS / VEHICLES (ACORD 101, Additional Remarks Schedule, may be attached if more space is required)

CERTIFICATE HOLDER

Proof of Coverage

CANCELLATION

SHOULD ANY OF THE ABOVE DESCRIBED POLICIES BE CANCELLED BEFORE THE EXPIRATION DATE THEREOF, NOTICE WILL BE DELIVERED IN ACCORDANCE WITH THE POLICY PROVISIONS.

AUTHORIZED REPRESENTATIVE

Nicholas R Hylant

© 1988-2015 ACORD CORPORATION. All rights reserved.

The ACORD name and logo are registered marks of ACORD

Exhibit D

Affidavit of No Prohibited Interest

THE STATE OF TEXAS §

THE COUNTY OF COLLIN §

I, Zac Hansen, an authorized agent of Contractor, make this affidavit and hereby under oath state the following:

I, and/or a person or persons related to me, have the following interest in a business entity that would be affected by the work or decision under this Agreement (Check all that apply):

_____ Ownership of ten percent (10%) or more of the voting shares of the business entity.

_____ Ownership of Twenty-Five Thousand and 00/100 Dollars ($25,000) or more of the fair market value of the business entity.

_____ Funds received from the business entity exceed ten percent (10%) of my income for the previous year.

_____ Real property is involved, and I have an equitable or legal ownership with a fair market value of at least Twenty-Five Thousand and 00/100 Dollars ($25,000).

_____ A relative of mine has a substantial interest in the business entity or property that would be affected by my business decision of the public body which I am a member.

_____ Other: _____.

__X__ None of the Above.

Upon filing this affidavit with the City of Sherman, Texas, I further affirm that no relative of mine, in the first degree by consanguinity or affinity, as defined in Chapter 573, TEX. GOV'T CODE, as amended, is a member of a public body which took action on the agreement.

Signed this 22 day of MARCH, 2024.

_____ PRESIDENT
Signature of Official/Title

BEFORE ME, the undersigned authority, this day personally appeared ADAM TEPE, and on oath stated that the facts hereinabove stated are true to the best of his/her knowledge or belief.

Sworn to and subscribed before me on this 22nd day of MARCH, 2024.

_____
Notary Public in and for the State of TEXAS
My commission expires: JUNE 13, 2027

ADAM TEPE
Notary ID #134404116
My Commission Expires
June 13, 2027

CONFLICT OF INTEREST QUESTIONNAIRE

FORM CIQ

For vendor doing business with local governmental entity

This questionnaire reflects changes made to the law by H.B. 23, 84th Leg., Regular Session.

This questionnaire is being filed in accordance with Chapter 176, Local Government Code, by a vendor who has a business relationship as defined by Section 176.001(1-a) with a local governmental entity and the vendor meets requirements under Section 176.006(a).

By law this questionnaire must be filed with the records administrator of the local governmental entity not later than the 7th business day after the date the vendor becomes aware of facts that require the statement to be filed. *See* Section 176.006(a-1), Local Government Code.

A vendor commits an offense if the vendor knowingly violates Section 176.006, Local Government Code. An offense under this section is a misdemeanor.

OFFICE USE ONLY

Date Received

1 **Name of vendor who has a business relationship with local governmental entity.**

NORTH TEXAS WINWATER CO.

2 ☐ **Check this box if you are filing an update to a previously filed questionnaire.** (The law requires that you file an updated completed questionnaire with the appropriate filing authority not later than the 7th business day after the date on which you became aware that the originally filed questionnaire was incomplete or inaccurate.)

3 **Name of local government officer about whom the information is being disclosed.**

_____

Name of Officer

4 **Describe each employment or other business relationship with the local government officer, or a family member of the officer, as described by Section 176.003(a)(2)(A). Also describe any family relationship with the local government officer. Complete subparts A and B for each employment or business relationship described. Attach additional pages to this Form CIQ as necessary.**

N/A

A. Is the local government officer or a family member of the officer receiving or likely to receive taxable income, other than investment income, from the vendor?

☐ Yes ☐ No

B. Is the vendor receiving or likely to receive taxable income, other than investment income, from or at the direction of the local government officer or a family member of the officer AND the taxable income is not received from the local governmental entity?

☐ Yes ☐ No

5 **Describe each employment or business relationship that the vendor named in Section 1 maintains with a corporation or other business entity with respect to which the local government officer serves as an officer or director, or holds an ownership interest of one percent or more.**

6 ☐ Check this box if the vendor has given the local government officer or a family member of the officer one or more gifts as described in Section 176.003(a)(2)(B), excluding gifts described in Section 176.003(a-1).

7 _____ 3/22/24

Signature of vendor doing business with the governmental entity — Date

RFP Evaluation - Water and Sewer Maintenance Parts & Supplies 2024

Evaluation Criteria	North Texas Winwater Co.	APSCO Supply	Ferguson Waterworks
Pricing (30%)	27.77	15.07	30.00
References (30%)	30.00	16.67	30.00
Qualifications - including past performance of City services (40%)	40.00	6.67	25.00
Evaluation Score	97.77	38.40	85.00

SHERMAN CITY COUNCIL
Agenda Communication Form

City Council Regular Meeting Agenda Item No. I.1.

Meeting Date: 4/15/2024

Prepared By: Teri Fine, Assistant to the City Manager

Approved By: Robby Hefton, City Manager

Caption:

OTHER BUSINESS

Receive Quarterly Progress Report from Sherman Economic Development Corporation President Kent Sharp

Issue:

To receive the Sherman Economic Development Cororation (SEDCO) quarterly progress report from President Kent Sharp

Background:

The brief presentation by the SEDCO President will provide the City Council with an overview of SEDCO's activities and accomplishments during the period from January 2024 to March 2024. SEDCO's last update was presented at the January .

Origination:

City Council

Financial Consideration:

This presentation is for information purposes only and has no impact on the City's revenues or expenses.

Staff Recommendation:

No action is required of the City Council.

Alternatives:

None recommended

Attachments:

1. SEDCO Quarterly Report - April 2024

REPORTING FORM FOR BOARDS AND COMMISSIONS

Name of Board: **Sherman Economic Development Corporation**

Name of Chair: Janie Bates
Name of Vice-Chair: Scott Bandemir

Date of Report to City Council: April 15, 2024

1. **In simple terms and as briefly as possible, please describe the mission of your board.**
   - *The mission of the Sherman Economic Development Corporation (SEDCO) is to grow and diversify the economy of Sherman and the surrounding area through the addition of new jobs and investment of primary employers.*

2. **Please list the top accomplishments of your board within the past quarter. (Please limit the list to five or fewer items).**
   - *SEDCO received the Texas Economic Development Council's (TEDC) 2023 Economic Excellence Recognition Award, for the fifth year in a row.*
   - *Presented a $317,276 SEDCO incentive payment to Sunny Delight. The company has invested $30,160,316.96 in qualified expenditures for two juicy juice production lines at their facility at 300 W FM 1417 in Sherman, Texas.*
   - *Industry and city leadership met to discuss concerns regarding the proposed Dorchester Cement Plant and Quarry. SEDCO staff attended the Texas Commission on Environmental Quality (TCEQ) Public Town Hall meeting where Kent spoke regarding possible negative impacts to the current and future industries within Progress Park.*
   - *Resolution No. SEDCO-2024.03: Authorizing $50,000 Small Business Grant to P.Q.D. International for assistance in purchasing a CNC tube bending machine to increase manufacturing capacity and a laser tube cutting machine to provide services that aren't currently available.*
   - *Hosted the Sherman WOMO Annual Launch into Action event with approximately 70 in attendance. Eighteen businesses participated in the marketplace to showcase their goods and services. Featured speakers included Casie Rivas, JaCoi James Pugh of Black Women's Wall Street, Eric Ross, and Gail Utter.*

3. **What are your plans for this board in the next quarter?**
   - *Compete aggressively for the attraction of new jobs and investments to the city by narrowing our focus to those companies that align with our semiconductor cluster, both nationally and internationally.*
   - *Through the Business Retention and Expansion (BRE) Program, we will continue our BRE visits to the Sherman industries and work closely with companies that have announced new investments in Sherman to ensure they have the support to meet their goals and receive the incentives as identified in the performance agreements.*
   - *Host a Leadership Lunch at the Sherman Municipal Ballroom.*
   - *Host the Q2 Sherman Women-Owned and Minority-Owned (WOMO) Small Group Breakout Session and a Resource Workshop for the WOMO Businesses.*
   - *Continue to add contacts to the Sherman WOMO business directory.*
   - *Contact each company with a job listing on shermantxjobs.com for updates. New listings will be boosted on social media.*

- *Ashton and Shannon will attend the International Asset Management Council (IAMC) Spring Forum in Greenville, SC. SEDCO will co-sponsor a Texas Private Dinner for company representatives and site selectors.*
- *Ashton, Shannon, and April will attend the Texas Economic Development Council (TEDC) Women in Economic Development Conference in Round Rock, TX.*
- *The SEDCO staff will visit Mansfield and Cedar Hills Economic Development partners.*
- *Kent, Ashton, and Shannon will attend the TEDC Mid-Year Conference in Conroe, TX.*
- *Shannon will continue the Leadership Sherman program and will graduate in May.*
- *SEDCO will present during Leadership Sherman's Economic Development Day in May.*
- *Finalize the recruitment trip to the SEMICON West Tradeshow in San Francisco this July.*
- *Sponsor the Sherman Chamber of Commerce Golf Tournament and the Sherman Education Foundation's Circle of Success Event*
- *Update the digital aerial map.*
- *Co-sponsor the Advanced Manufacturing Program (AMP) End of Year Luncheon in May.*

4. **How often did this board meet in the last quarter?**
   - *The SEDCO Board meets on the second Tuesday of each month and holds Special Called Meetings when needed. Since our last report, the SEDCO Board has held three Regular Scheduled Board Meetings (January 9th, February 13th, March 12th).*

5. **In what percentage of those meetings was a quorum of board members present?**
   - *100%*

6. **Did any member attend less than 75% of those meetings? If so, which member and how often did they attend?**
   - *Jason Brumm attended two of the three Regular Scheduled Board Meetings.*

7. **What other information would your board like to communicate to the City Council? (Please be concise in your response).**
   - *Presently working 7 active projects with an estimated $1.1 Billion CAPEX and approximately 1,059 new jobs.*
   - *Completed six site visits and prospect calls with companies interested in relocating and/or expanding their operations to Sherman.*
   - *Completed two BRE visits with Tyson Foods and Mueller.*
   - *During the last quarter, the SEDCO Board approved the following:*
     - *Resolution No. SEDCO-2024.01: Amendment to the Articles of Incorporation changing the number of directors from five to seven.*
     - *Resolution No. SEDCO-2024.02: Amendment to the SEDCO Bylaws to reflect the Articles of Incorporation seven-member board of directors to serve for (3) three-year terms.*
     - *First Amendment to the Amended and Restated Sales Contract with HPI Acquisition Company, LLC to extend the inspection period 60 days.*
     - *Resolution No. SEDCO-2024.04: Amendment to the SEDCO Bylaws*
     - *Proposed Strategic Plan*
     - *Progress Park Tour with Board Members*
     - *Proposed Cement Kiln and Quarry in Dorchester and the effects on Sherman Industry.*

- *Co-hosted the Texoma Semiconductor Tech Hub (TSTH) Workshop #2 held at Austin College, attended the Launch Event at SMU Dallas, created two videos marketing the TSTH members, and participated in meetings with the consortium to discuss the EDA proposal, letters of commitment, and deadlines.*
- *Hosted the Texoma Semiconductor Technology Roundtable event with special guest U.S. Senator John Cornyn and featured panelists: Drew Springer, Texas Senator; Reggie Smith, Texas State Representative; Mohammad Yunus, SVP of Technology and Manufacturing, Texas Instruments; Wyatt Watson, Project Manager, GlobalWafers America; Jeff Brown, Global VP of Sensing Engineering and Operations, Coherent; Kent Sharp, President, Sherman Economic Development Corporation; David Plyler, Mayor, City of Sherman; Bruce Dawsey, Judge, Grayson County; Steven O'Day, President, Austin College; Dr. Jeremy McMillen, President, Grayson College; Dr. Tyson Bennett, Superintendent, Sherman Independent School District; and Dr. Suku Nair, Vice Provost for Research and Chief Innovation Officer, SMU.*
- *TSTH members presented at the American Institute in Taiwan (AIT) event at Hsin Chu City. SEDCO continues to partner with the TSTH in marketing efforts and project impact data.*
- *Hosted a Plant Manager and Safety Leader Forum at Emerson with 22 participants and 6 industries in attendance.*
- *Kent met with Oncor to discuss new substation specifications and infrastructure needs.*
- *Hosted a meeting with BNSF, Via Rail, industry representatives, city staff, and SEDCO staff to discuss the rail concept and costs in Progress Parks II and VI.*
- *Sponsored the IAMC Local event in Dallas.*
- *SEDCO staff attended the Northeast Texas Economic Development Seminar, where Ashton participated on the Peer Panel with other local economic development professionals.*
- *Kent, Ashton, and Shannon attended the TEDC Winter Conference in San Antonio. During the conference, Ashton and Shannon completed another Future Leaders Training (FLT) Seminar. Shannon completed the requirements and graduated from the FLT program.*
- *Shannon attended the Texoma Health Foundation Grayson Community Solutions in Mental Wellbeing Solutions Session.*
- *Ashton was asked to serve on the planning committee for the TEDC Women in Economic Development Conference.*
- *Coordinated a state level presence to attend the SEMICON West tradeshow in San Francisco, CA this July.*
- *Kent gave an economic update presentation to the Sherman Rotary Club and the Sherman Chamber Young Professionals.*
- *Held a SEDCO Board Orientation for Willie Steele and Robin Phillips.*
- *Continued to update the Sherman WOMO webpage with business resources.*
- *Hosted a WOMO Committee Meeting to review the results from the annual event survey and discuss ways to further grow the WOMO program.*
- *Courtney Mitchell hosted the 1st Quarter WOMO small group session where Lindsey Manley of Quatro Creative did a presentation on Telling Your Brand Story Using Social Media. The attendees asked questions and shared updates and announcements about their unique businesses.*
- *Began planning for the next WOMO Workshop - Connecting WOMO Businesses to Resources.*
- *Ashton and Shannon participated in the Grayson College Facilities Planning meeting as members of the committee.*

- *SEDCO staff attended Denison's 22nd Annual Economic Development Summit.*
- *In March, Shannon participated in Leadership Sherman's Legislative Day in Austin, where she visited the Bullock Texas State Museum, toured the Texas Association of Business Headquarters, and had a VIP tour of the Capitol.*
- *Updated sedco.org with new data and graphics.*
- *Toured Highland Homes in Bel Air village as well as visited the Heritage Ranch development.*
- *Explored the Scout platform for business recruitment and retention.*
- *Sponsored the Sherman Chamber TxDOT Luncheon.*
- *Sponsored the Sherman Chamber of Commerce Awards Luncheon. SEDCO was nominated for Small Business of the Year, and Shannon was nominated for Ambassador of the Year and Community Leader of the Year.*
- *Shannon attended the SCORE Social Media Skills Workshop at the Fort Worth Business Assistance Center.*
- *Collaborated with 2x2 Media to create the next series of 2023/2024 annual reels.*
- *Met with Lindsey Manley to discuss ways to promote Sherman.*
- *SEDCO staff participated in multiple webinars, committee meetings, and community events.*
- *Sponsored five ads on Facebook highlighting Sherman Industries, available jobs, Sherman WOMO, and the Sherman community including downtown:*
    - *Total Reach: 54,740*
    - *Total Link Clicks: 1,947*
    - *Total Post Engagement: 21,25*
    - *Thru Plays: 39,422*

SHERMAN CITY COUNCIL
Agenda Communication Form

City Council Regular Meeting Agenda Item No. I.2.

Meeting Date: 4/15/2024

Prepared By: Nate Strauch, Community and Support Services Manage

Approved By: Robby Hefton, City Manager

Caption:
OTHER BUSINESS
Receive Presentation on the "Trolley Problem"

Issue:
Exploring the opportunity for Sherman to purchase one or more trolleys

Background:
Sherman has been approached about the opportunity to purchase two trolleys from a local investor. The Sherman Main Street Advisory Committee endorses the idea and would like to provide a short presentation to Council outlining proposed immediate uses for said trolleys, as well as possible future uses in the City's historic downtown.

Origination:
Sherman Main Street Advisory Committee

Financial Consideration:
The cost to purchase one trolley is $35,000, or both for $60,000. The cost to lease would be $1,000 per trolley per month, with a minimum lease period negotiable. Additional costs will be necessary to bring the vehicles into the necessary condition for resumed public use.

Staff Recommendation:
The Sherman Main Street Office believes the City could make immediate and ongoing use of these vehicles, if Council determines that the price is appropriate.

Alternatives:
As directed by Council

Attachments:
None

SHERMAN CITY COUNCIL
Agenda Communication Form

City Council Regular Meeting Agenda Item No. I.3.

Meeting Date: 4/15/2024

Prepared By: Mary Lawrence, Chief Financial Officer

Approved By: Robby Hefton, City Manager

Caption:
Other Business
Approve Investment Report for Quarter Ended March 31, 2024

Issue:
To approve the Investment Report for the quarter ended March 31, 2024

Background:
The total operating portfolio book value of about $42.6 million increased by about $10.2 million from the previous quarter due to deposits in the Local Government Investment Pools, purchases of Certificates of Deposit, State of Texas Political Subdivision Obligations and U.S. Agency Securities. Additionally, called U.S. Agency securities, maturity of a U.S. Treasury note and a Certificate of Deposit decreased the portfolio to a lesser degree. The underlying investments were adequately diversified among five different types of securities. The portfolio's weighted-average maturity of 407 days increased from 364 days last quarter. The portfolio yield of 4.08% was 95 basis points below our benchmark 1-year Constant Maturity Treasury Index. Book value slightly exceeds market value ($0.3 million).

The debt proceeds portfolio balance of $80.9 million decreased by $2.7 million due to payments for capital projects. The portfolio includes a Local Government Investment Pool and U.S. Agencies. The portfolio's weighted-average maturity of 99 days increased from 55 days last quarter. The portfolio yield of 5.18% was 31 basis points below the benchmark yield for this portfolio, the 4-week Constant Maturity Index of 5.49%. Book value approximated market value.

Origination:
Finance Department

Financial Consideration:
None

Staff Recommendation:
Staff recommends the Council accept the Investment Report as presented.

Alternatives:
The Council could offer suggestions for improvement or could request more frequent reporting.

Attachments:
1. 2024-03-31 Investment Reports w_Memo

Sherman
CLASSIC TOWN. BROAD HORIZON.

memorandum

DATE: April 10, 2024

TO: The City of Sherman Investment Committee
Councilman Juston Dobbs
Deputy Mayor Pam Howeth
Robby Hefton, City Manager

FROM: Mary Lawrence, Chief Financial Officer

SUBJECT: Investment Reports for the Quarter Ended March 31, 2024.

Enclosed is a copy of the quarterly investment reports for March 31, 2024. As of that date, the City followed all applicable state laws and internal policies for the portfolio.

The total operating portfolio book value of about $42.6 million increased by about $10.2 million from the previous quarter due to deposits in the Local Government Investment Pools, purchases of Certificates of Deposit, State of Texas Political Subdivision Obligations and U.S. Agency Securities. Additionally, called U.S. Agency securities, maturity of a U.S. Treasury note and a Certificate of Deposit decreased the portfolio to a lesser degree. The underlying investments were adequately diversified among five different types of securities. The portfolio's weighted-average maturity of 407 days increased from 364 days last quarter. The portfolio yield of 4.08% was 95 basis points below our benchmark 1-year Constant Maturity Treasury Index. Book value slightly exceeds market value ($0.3 million).

The debt proceeds portfolio balance of $80.9 million decreased by $2.7 million due to payments for capital projects. The portfolio includes a Local Government Investment Pool and U.S. Agencies. The portfolio's weighted-average maturity of 99 days increased from 55 days last quarter. The portfolio yield of 5.18% was 31 basis points below the benchmark yield for this portfolio, the 4-week Constant Maturity Index of 5.49%. Book value approximated market value.

The investment reports will be on the April 15, 2024, City Council agenda for their review and approval. Please call me if you have any questions about this item.

attachment (as stated above)

Sherman
CLASSIC TOWN. BROAD HORIZON.

CITY OF SHERMAN, TEXAS
INVESTMENT PORTFOLIO SUMMARY
For the Quarter Ending March 31, 2024

Total Portfolio Summary

	Current Quarter 3/31/2024	Prior Quarter 12/31/2023	Change From Prior Quarter
Book Value	$ 42,624,468	$ 32,397,443	$ 10,227,025
Market Value	$ 42,262,731	$ 32,021,206	$ 10,241,525
Weighted Average Maturity - Days	407	364	43
Weighted Average Yield	4.08%	3.68%	0.40%
Earned Income	$ 359,277	$ 313,744	$ 45,533
Earned Income - Year-to-Date	$ 673,021	$ 313,744	$ 359,277

This report complies with the requirements of the public funds investment law and covers all the funds of the City of Sherman that are subject to that law.

As of March 31, 2024, the City's portfolio had a book value of $42.6 million and a market value of $42.2 million. Of this amount, approximately $14.1 million was held in Local Government Investment Pools (LGIP), $3 million was held in Certificates of Deposit (CD), $15.5 million was held in U.S. Agency Securities, $2.0 million was held in U.S. Treasury Notes and $8 million was held in State of Texas political subdivision obligations.

The portfolio value increased by $10.2 million from the previous quarter due to deposits of $6 million in Local Government Investment Pools, deposits of $3 million in Certificates of Deposit, purchases of $1.7 million of State of Texas Political subdivision obligations, and purchases of $5 million in U.S. Agency Securities. Additionally, U.S. Agency Securities totaling $3 million were called and there were maturities of a US Treasury note and a Certificate of Deposit, totaling $1 million and $1.5 million, respectively.

The weighted average yield of the portfolio was 4.08%, which is 95 basis points less than the 1-year Constant Maturity Treasury Index of 5.03%, and 40 basis points higher than the previous quarter.

The weighted average maturity of the portfolio increased from 364 days at December 31, 2023, to 407 days at March 31, 2024.

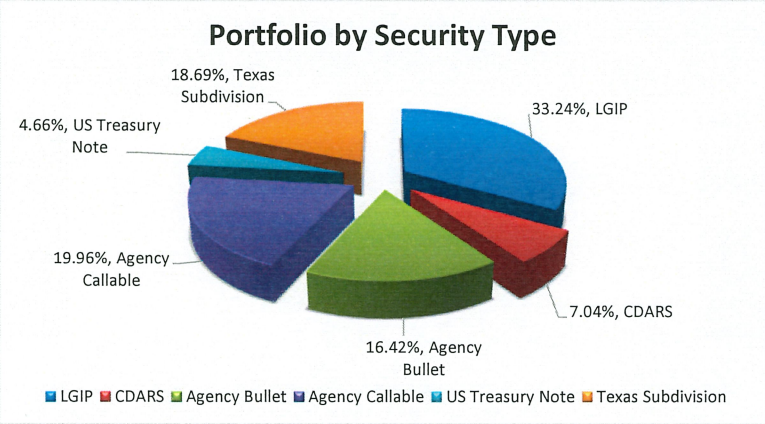

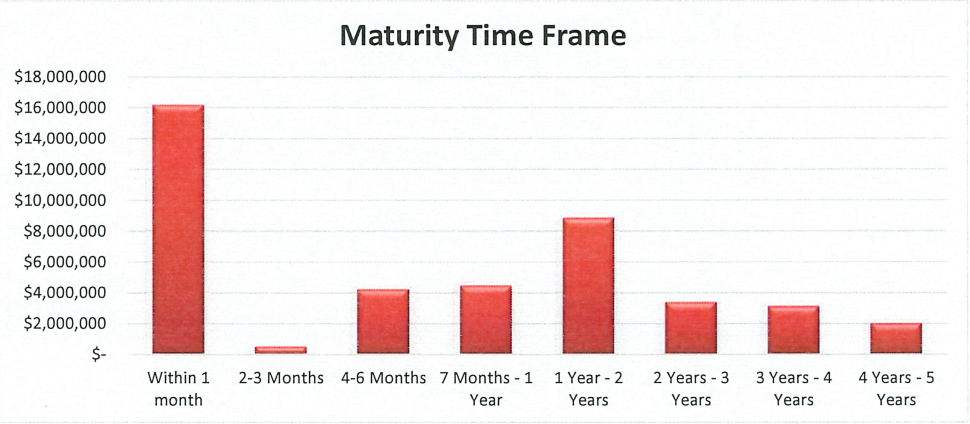

Mary Lawrence, Chief Financial Officer and City of Sherman Investment Officer

Jana Walker, Controller and City of Sherman Investment Officer

Sherman
CLASSIC TOWN. BROAD HORIZON.

CITY OF SHERMAN, TX
Investments Outstanding
As of 3/31/2024

CUSIP	Settlement Date	Security Type	Security Description	CPN Rate	Maturity Date	Credit Rating	Par Value	Purchase Price	Original Cost	Book Value	Market Price	Market Value	Days to Maturity	YTM
TexPool		LGIP	TexPool		4/1/2024	AAAm	$ 8,059,673	100.00	$ 8,059,673	$ 8,059,673	100.00	8,059,673	1	5.33%
TexStar		LGIP	TexSTAR		4/1/2024	AAAm	4,207,294	100.00	4,207,294	4,207,294	100.00	4,207,294	1	5.31%
TexPool ARPA		LGIP	TexPool ARPA		4/1/2024	AAAm	1,903,099	100.00	1,903,099	1,903,099	100.00	1,903,099	1	5.33%
CDARS 1028340563	01/04/24	CDARS	Bank of Texas	4.40%	1/2/2026		1,000,000	100.00	1,000,000	1,000,000	100.00	1,000,000	642	4.40%
CDARS 1028340504	01/04/24	CDARS	Bank of Texas	5.15%	7/5/2024		2,000,000	100.00	2,000,000	2,000,000	100.00	2,000,000	96	5.15%
3133EMVD1	04/05/21	Agency Callable	FFCB	0.33%	4/5/2024	AA+	1,000,000	100.00	1,000,000	1,000,000	99.94	999,365	5	0.33%
3130ARPN5	04/26/22	Agency Bullet	FHLB	2.61%	4/26/2024	AA+	1,000,000	100.00	1,000,000	1,000,000	99.81	998,139	26	2.61%
3130AMLM2	06/07/21	Agency Callable	FHLB	0.38%	6/7/2024	AA+	500,000	100.00	500,000	500,000	99.10	495,506	68	0.38%
442349EL6	03/24/23	Texas Subdivision	Houston Tx aprt Sys Rev	1.27%	7/1/2024	AA	1,000,000	100.00	968,714	993,158	98.86	988,584	92	4.10%
811275HB5	11/23/21	Texas Subdivision	Scurry Rosser TX ISD	3.00%	8/15/2024	Aa3	205,000	106.91	219,155	206,946	99.48	203,930	137	0.45%
3136G43H4	03/29/21	Agency Callable	FHLB	0.40%	9/16/2024	AA+	1,000,000	99.850	998,500	999,800	97.89	978,852	169	0.44%
3130APNE1	11/18/21	Agency Callable	FHLB	0.90%	11/18/2024	AA+	1,000,000	100.000	1,000,000	1,000,000	97.33	973,264	232	0.90%
386166JC7	02/24/22	Texas Subdivision	Grand Praire TX TXbl Ref	3.00%	1/1/2025	AA	310,000	103.887	322,050	313,168	98.36	304,926	276	1.60%
983064YX8	03/11/21	Texas Subdivision	City of Wylie, TX GO	3.00%	2/15/2025	AA	250,000	110.740	276,852	255,982	99.16	247,911	321	0.25%
3133ENPY0-A	02/25/22	Agency Bullet	FFCB	1.75%	2/25/2025	AA+	1,000,000	99.966	999,660	999,897	97.10	971,002	331	1.76%
3133ENPY0-B	03/11/22	Agency Bullet	FFCB	1.75%	2/25/2025	AA+	1,000,000	99.513	995,913	999,293	97.10	971,001	331	1.92%
882806ES7	03/24/23	Texas Subdivision	Texas St. Tech Univ Rev	2.96%	2/15/2025	AA+	885,000	98.381	870,672	878,372	98.09	868,074	321	3.86%
88213AKC8	01/24/23	Texas Subdivision	Texas St. A&M Univ R	2.69%	5/15/2025	AA	510,000	96.496	492,130	501,312	97.44	496,932	410	4.30%
88213ABW4	03/24/23	Texas Subdivision	Texas St A&M Univ R	2.88%	5/15/2025	AA	115,000	97.770	113,668	113,657	97.65	112,296	410	3.98%
91282CEY3	01/23/23	US Treasury Note	US Treasury	3.00%	7/15/2025	AA	1,000,000	97.740	977,431	988,614	97.67	976,679	471	3.97%
2487757W2	02/07/23	Texas Subdivision	Denton Cnty TX	0.77%	7/15/2025	AA	1,335,000	92.332	1,233,264	1,280,785	94.79	1,265,440	471	4.11%
87638QQW2	03/24/23	Texas Subdivision	Tarrant Cnty TX Cult Hosp Rev	1.39%	9/1/2025	AA	100,000	93.750	93,854	96,344	94.67	94,673	519	4.12%
3130ARCN9	03/29/22	Agency Bullet	FHLB	2.00%	9/29/2025	AA+	1,000,000	100.000	1,000,000	1,000,000	96.02	960,209	547	2.00%
3134GX3U6	10/24/22	Agency Bullet	Freddie Mac	5.15%	10/24/2025	AA+	1,000,000	100.000	1,000,000	1,000,000	99.59	995,851	572	5.15%
3130AUBX1	12/29/22	Agency Bullet	FFCB	5.00%	12/29/2025	AA+	1,000,000	100.000	1,000,000	1,000,000	99.77	997,745	638	5.00%
79625GFC2	04/13/22	Texas Subdivision	San Antonio Tx Elec & Gas TXBl	3.15%	2/1/2026	AA+	350,000	100.000	350,000	350,000	96.86	339,002	672	3.15%
232769JW0	09/02/22	Texas Subdivision	Cypress-Fairbanks TX Ind Sch	5.00%	2/15/2026	AA+	500,000	104.770	523,031	512,952	100.44	502,191	686	3.52%
3134GYH96	02/27/23	Agency Bullet	FHLMC	5.20%	2/24/2026	AA	1,000,000	100.000	1,000,000	1,000,000	99.91	999,077	695	5.20%
3130AMMJ8	06/06/21	Agency Callable	FHLB	1.50%	6/9/2026	AA+	1,000,000	100.000	1,000,000	1,000,000	93.71	937,110	800	0.40%
5370962Z1	01/19/24	Texas Subdivision	Little Elm TX ISD	0.00%	8/15/2026	AA+	480,000	89.228	428,294	432,259	88.89	426,689	867	4.50%
876448DY4	01/24/23	Texas Subdivision	Tarrant Tx Regl Water Dist	0.75%	9/1/2026	AA	400,000	89.195	356,780	371,042	91.23	364,902	884	4.00%
4637778E5	02/07/23	Texas Subdivision	Irving Tx Table	1.47%	9/15/2026	AA	600,000	91.000	549,467	563,057	92.31	553,860	898	4.18%
91282CJT9	02/02/24	US Treasury Note	US Treasury	4.00%	1/15/2027	AA+	1,000,000	99.585	995,703	995,929	98.84	988,359	1,020	4.16%
3134H1K7	01/26/24	Agency Callable	FHLMC	5.20%	6/11/2027	AA+	1,000,000	100.180	1,001,800	1,001,708	99.80	997,976	1,167	4.98%
1164753A0	01/24/24	Texas Subdivision	Brownsville TXD USR	1.48%	9/1/2027	AA+	1,210,000	90.040	1,089,484	1,095,802	90.00	1,088,949	1,249	4.50%
3130AXAQ1	01/26/24	Agency Callable	FHLB	5.70%	9/20/2027	AA+	1,000,000	100.455	1,004,546	1,004,325	100.28	1,002,784	1,268	4.96%
31242WFF4	01/24/24	Agency Callable	FHLB	5.17%	1/29/2029	AA+	1,000,000	100.000	1,000,000	1,000,000	99.36	993,590	1,765	5.17%
31310B04R7	02/22/24	Agency Callable	FHLB	4.65%	2/16/2029	AA+	1,000,000	100.000	1,000,000	1,000,000	99.78	997,798	1,783	4.65%
Total							**$ 42,920,066**		**$ 42,531,033**	**$ 42,624,468**		**$ 42,262,731**		

Sherman
CLASSIC TOWN. BROAD HORIZON.

CITY OF SHERMAN, TX
Market Value Summary
As of 3/31/2024

CUSIP	Settle Date	Security Description	Maturity Date	Market Value 12/31/2023	Change in Market Value	Market Value 3/31/2024
TexPool		TexPool		$ 3,963,157	$ 4,096,516	$ 8,059,673
TexStar		TexStar		2,157,336	2,049,958	4,207,294
TexPool ARPA		TexPool ARPA		1,878,037	25,062	1,903,099
CDARS 1028340563		Bank of Texas		-	1,000,000	1,000,000
CDARS 1028340504		Bank of Texas		-	2,000,000	2,000,000
CDARS 1026654471		Bank of Texas	1/4/2024	1,500,000	(1,500,000)	-
9128CBM2	2/22/2021	US Treasury Note B Class	2/15/2024	993,792	(993,792)	-
3133EMVD1	4/5/2021	FFCB	4/5/2024	986,764	12,601	999,365
3130ARPN5	4/26/2022	FHLB	4/26/2024	991,621	6,518	998,139
3130AMLM2	6/7/2021	FHLB	6/7/2024	489,614	5,892	495,506
442349EL6	3/24/2023	Houston Tx aprt Sys Rev	7/1/2024	981,443	7,141	988,584
811275HB5	11/23/2021	Scurry Rosser TX ISD	8/15/2024	204,694	(764)	203,930
3130AV3D2	3/6/2023	FHLB	9/6/2024	998,754	(998,754)	-
3136G43H4	3/29/2021	FHLB	9/16/2024	968,039	10,813	978,852
3130APNE1	11/18/2021	FHLB	11/18/2024	963,790	9,474	973,264
3130AUZ56	3/24/2023	FHLB	12/20/2024	997,193	(997,193)	-
386166JC7	2/24/2022	Grand Praire TX TXbl Ref	1/1/2025	303,654	1,272	304,926
983064YX8	3/11/2021	City of Wylie, TX GO	2/15/2025	249,799	(1,888)	247,911
882806ES7	3/24/2023	Texas St. Tech Univ Rev	2/15/2025	866,081	1,993	868,074
3133ENPY0-A	2/25/2022	FFCB	2/25/2025	968,821	2,181	971,002
3133ENPY0-B	3/11/2022	FFCB	2/25/2025	966,820	4,181	971,001
88213AKC8	1/24/2023	Texas St. A&M Univ R	5/15/2025	496,179	753	496,932
88213ABW4	3/24/2023	Texas St A&M Univ R	5/15/2025	112,179	117	112,296
91282CEY3	1/23/2023	US Treasury	7/15/2025	978,320	(1,641)	976,679
2487757W2	2/7/2023	Denton Cnty TX	7/15/2025	1,259,554	5,886	1,265,440
87638QQW2	3/24/2023	Tarrant Cnty TX Cult Hosp Rev	9/1/2025	94,221	452	94,673
3130ARCN9	3/29/2022	FHLB	9/29/2025	959,544	665	960,209
3134GX3U6	10/24/2022	Freddie Mac	10/24/2025	996,379	(528)	995,851
3130AUBX1	12/29/2022	FFCB	12/29/2025	994,484	3,261	997,745
79625GFC2	4/13/2022	San Antonio Tx Elec & Gas TXBI	2/1/2026	339,834	(832)	339,002
232769JW0	9/2/2022	Cypress-Fairbanks TX Ind Sch	2/15/2026	506,787	(4,596)	502,191
3130AMMJ8	6/6/2021	FHLB	6/9/2026	940,653	(3,543)	937,110
876448DY4	1/24/2023	Tarrant Tx Regl Water Dist	9/1/2026	362,966	1,936	364,902
3134GYH96	2/27/2023	FHLMC	2/24/2026	998,464	613	999,077
4637778E5	2/7/2023	Irving Tx Table	9/15/2026	554,577	(717)	553,860
3134GYXS6	7/27/2028	FHLMC	7/27/2028	997,656	(997,656)	-
5370962Z1	8/15/2026	Little Elm TX ISD	8/15/2026	-	426,689	426,689
91282CJT9	2/2/2024	US Treasury	1/15/2027	-	988,359	988,359
3134H1K7	6/11/2027	FHLMC	6/11/2027	-	997,976	997,976
1164753A0	9/1/2027	Brownsville TXD USR	9/1/2027	-	1,088,949	1,088,949
3130AXAQ1	9/20/2027	FHLB	9/20/2027	-	1,002,784	1,002,784
31242WFF4	1/29/2029	FHLB	1/29/2029	-	993,590	993,590
31310B04R7	2/16/2029	FHLB	2/16/2029	-	997,798	997,798
Total				**$ 32,021,206**	**$ 10,241,525**	**$ 42,262,731**

Sherman
CLASSIC TOWN. BROAD HORIZON.

CITY OF SHERMAN, TX
Investment Transaction Report
As of 3/31/2024

Trade Date	Settle Date	CUSIP	Security Description	Coupon	Maturity Date	Call Date	Par Value	Principal Amount	Interest Purchased/ Received	Total Amount	YTM
Maturities, Calls and Withdrawals											
	1/4/2024	CDARS 1026654471	Bank of Texas	4.50%	1/4/2024		1,500,000	1,500,000	555	1,500,555	4.60%
	1/27/2024	3134GYXS6	FHLMC	6.00%	7/27/2028	1/27/2024	1,000,000	1,000,000	29,833	1,029,833	6.00%
	2/15/2024	9128CBM2	US Treasury Note B Class	0.13%	2/15/2024		1,000,000	1,000,000	625	1,000,625	0.21%
	2/15/2024	3130AUZ56	FHLB 5.25 12/20/24	5.25%	12/20/204	2/15/2024	1,000,000	1,000,000	19,950	1,019,950	4.75%
	3/6/2024	3130AV3D22	FHLB	5.45%	9/6/2024	3/6/2024	1,000,000	1,000,000	27,250	1,027,250	5.45%
Purchases											
	1/4/2024	CDARS 1028340563	Bank of Texas	4.40%			1,000,000	1,000,000	-	1,000,000	4.50%
	1/4/2024	CDARS 1028340504	Bank of Texas	5.28%			2,000,000	2,000,000	-	2,000,000	5.28%
	1/19/2024	TexStar	LGIP	5.32%			2,000,000	2,000,000	-	2,000,000	5.32%
	1/12/2024	TexPool	LGIP	5.35%			2,000,000	2,000,000	-	2,000,000	5.35%
	1/18/2024	TexPool	LGIP	5.35%			2,000,000	2,000,000	-	2,000,000	5.35%
	1/24/2024	1164753A0	Brownsville TXD Utility Sys Rev	1.48%			1,210,000	1,210,000	7,049	1,217,049	5.45%
	1/24/2024	5370962Z1	Little Elm TX ISD	0.00%			480,000	428,294	-	428,294	4.50%
	1/26/2024	3142WFF4	FHLB	5.17%			1,000,000	1,000,000	-	1,000,000	5.17%
	1/26/2024	3134H1K7	FHLMC	5.20%			1,000,000	1,000,000	6,933	1,006,933	4.98%
	1/26/2024	3130AXAQ1	FHLB	5.70%			1,000,000	1,004,546	20,425	1,024,971	4.96%
	2/2/2024	91282CJT9	US Treasury	4.00%			1,000,000	1,000,000	1,758	1,001,758	4.16%
	2/22/2024	3130B04R7	FHLB	4.65%			1,000,000	1,000,000	-	1,000,000	4.65%
Income Payments											
	3/31/2024	TexPool	LGIP	5.32%					41,403	41,403	5.32%
	3/31/2024	TexStar	LGIP	5.30%					49,958	49,958	5.30%
	3/31/2024	TexPool-ARPA	LGIP	5.32%					25,062	25,062	5.32%
	1/1/2024	442349EL6	Houston TX Arpt SR	1.27%	7/1/2024				6,360	6,360	4.10%
	1/1/2024	386166JC7	Grand Praire TX TXbl Ref	3.00%	2/24/2025				4,650	4,650	1.60%
	1/15/2024	248775W2	Denton Cnty TX	0.77%	7/15/2025				5,166	5,166	4.11%
	1/15/2024	91282CEY3	US Treasury	3.00%	7/15/2025				15,000	15,000	3.97%
	2/1/2024	79625GFC2	San Antonio Tx Elec & Gas TXBl	3.15%	2/1/2026				5,506	5,506	3.15%
	2/15/2024	882086ES7	Texas St Tech Univ Rev	2.96%	2/15/2025				13,102	13,102	3.86%
	2/15/2024	811275HB5	Scurry Rosser TX ISD	3.00%	8/15/2024				3,075	3,075	0.45%
	2/15/2024	983064YX8	City of Wylie GO	3.00%	2/15/2025				3,750	3,750	0.25%
	2/15/2024	232769JW0	Cypress Fairbanks Tx IS	5.00%	2/15/2026				12,500	12,500	3.52%
	2/24/2024	3134GYH96	FHLMC	5.20%	2/24/2026				26,000	26,000	5.20%
	2/25/2024	3133ENPY0-B	FFCB 1 3/7	1.75%	2/25/2025				8,750	8,750	1.92%
	2/25/2024	3133ENPY0-A	FFCB 1 3/7	1.75%	2/25/2025				8,750	8,750	1.76%
	3/1/2024	876448DY4	Tarrant TxRegl Water Dist	0.75%	9/1/2026				1,500	1,500	4.00%
	3/1/2024	1164753A0	Brownsville TXD Utility Sys Rev	1.48%	9/1/2027				8,936	8,936	5.45%
	3/1/2024	8638QQW2	Tarrant Cnty TX Cul H Rev	1.39%	9/1/2025				693	693	4.12%
	3/15/2024	`4637778E5	Irving TX Table	1.47%	9/15/2026				4,395	4,395	4.18%
	3/16/2024	3136G43H4	Fannie Mae	0.40%	9/16/2024				2,000	2,000	0.44%
	3/20/2024	3130AXAQ1	FHLB	5.70%	9/20/2027				28,500	28,500	4.96%
	3/29/2024	3130ARCN9	FHLB	2.00%	9/29/2025				10,000	10,000	2.02%
	3/29/2024	CDARS 1028340563	Bank of Texas	4.40%	1/4/2026				10,669	10,669	4.40%
	3/29/2024	CDARS 1028340504	Bank of Texas	5.15%	7/4/2024				24,965	24,965	5.15%
Total									**$ 435,068**		

Sherman
CLASSIC TOWN. BROAD HORIZON.

CITY OF SHERMAN, TX
Comparison by Type
As of 3/31/2024

Cash/Investment Type	Balance 6/30/2023	Balance 9/30/2023	Balance 12/31/2023	Balance 3/31/2024	Percent of Portfolio	Portfolio Cap
Local Government Pool (LGIP)	$9,498,982	$ 9,383,606	$ 7,998,530	$ 14,170,066	33%	50.00%
FDIC Ins Inv	4,124,812	5,631	-	-	0%	50.00%
Certificates of Deposit	1,500,000	1,500,000	1,500,000	3,000,000	7%	50.00%
US Agency	14,996,970	14,997,932	14,498,862	15,505,023	36%	50.00%
US Treasury	1,980,911	1,983,772	1,986,253	1,984,543	5%	50.00%
Texas Subdivisions	8,168,734	6,837,827	6,413,798	7,964,836	19%	50.00%
Total	**$ 40,270,409**	**$ 34,708,768**	**$ 32,397,443**	**$ 42,624,468**	**100.00%**	

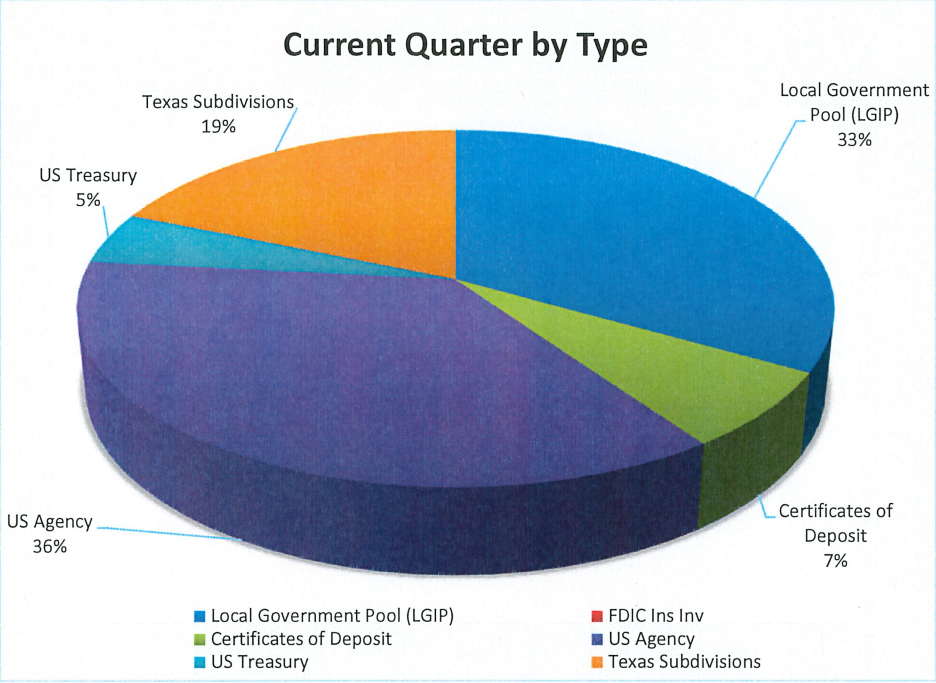

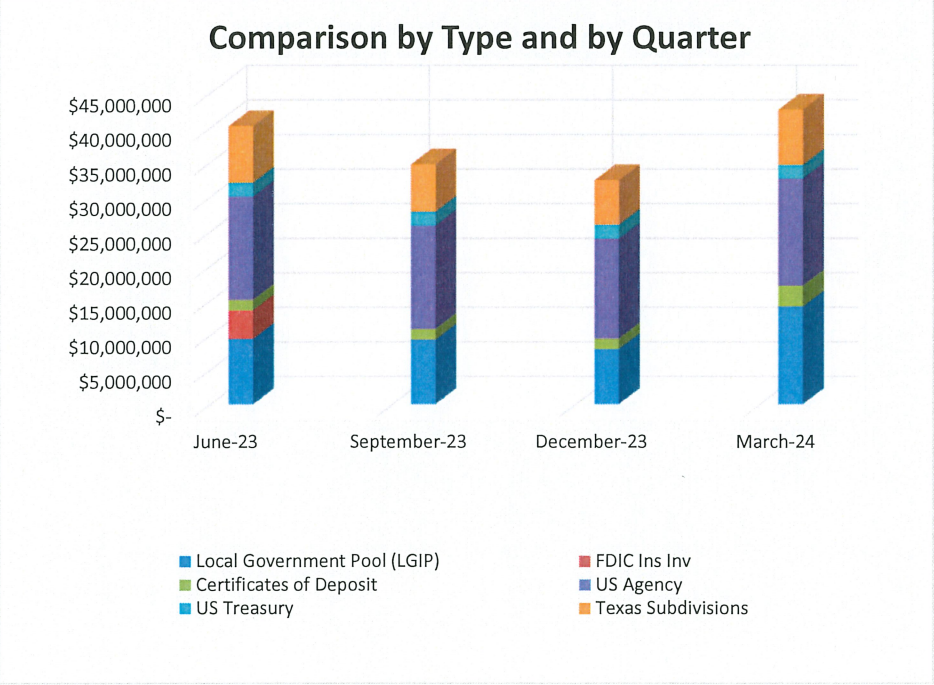

Sherman
CLASSIC TOWN. BROAD HORIZON.

CITY OF SHERMAN, TX
Portfolio by Maturity
As of 3/31/2024

Maturity Time Frame	Balance 6/30/2023	Balance 9/30/2023	Balance 12/31/2023	Balance 3/31/2024	Percent of Portfolio
			$ -		
Within 1 month	$ 14,623,773	$ 9,389,237	9,498,530	$ 16,170,066	37.9%
2-3 Months	1,349,861	946,520	999,916	500,000	1.2%
4-6 Months	950,039	2,499,712	2,500,000	4,199,904	9.9%
7 Months - 1 Year	4,999,507	5,688,750	5,194,745	4,446,712	10.4%
1 Year - 2 Years	9,240,085	9,397,532	9,412,218	8,843,664	20.7%
2 Years - 3 Years	8,193,275	5,787,018	3,792,034	3,362,287	7.9%
3 Years - 4 Years	913,869	-	3,101,835	3,101,835	7.3%
4 Years - 5 Years	-	1,000,000	1,000,000	2,000,000	4.7%
	$ 40,270,409	**$ 34,708,769**	**$ 35,499,278**	**$ 42,624,468**	**100.00%**

Liquidity Indicator					Maximum Allowable
Weighted Average Maturity	**363.29**	**405.61**	**363.74**	**406.80**	**500.00**

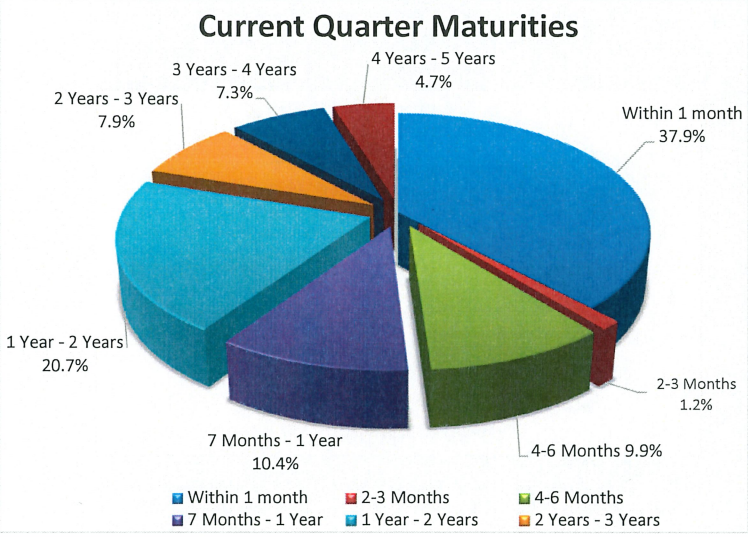

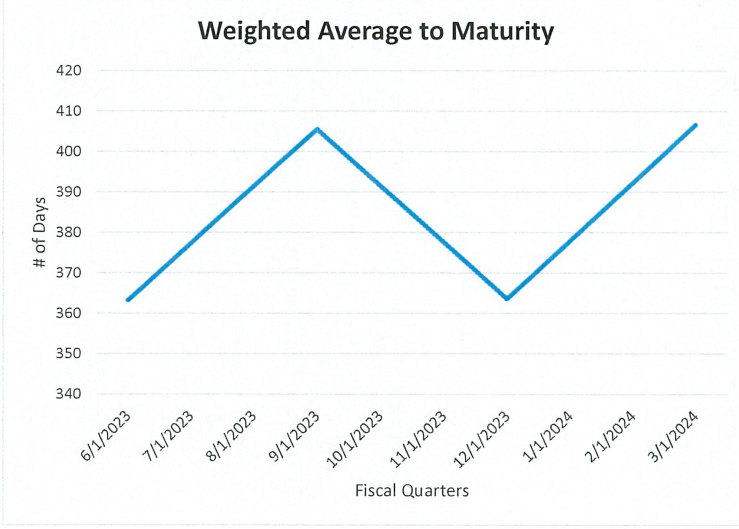

Sherman
CLASSIC TOWN. BROAD HORIZON.

CITY OF SHERMAN, TX
Earned Income
As of 3/31/2024

Date Received/ Purchased	CUSIP	Security Description	Coupon	YTM	Interest Purchased/ Received	Accrued Interest/ Amortization	Income Earned
3/31/2024	TexPool	TexPool			$ 41,403	$ -	$ 41,403
3/31/2024	TexStar	TexStar			49,958	-	49,958
3/31/2024	TexPool-ARPA	TexPool			25,062	-	25,062
1/7/2024	CDARS 1026654471	Bank of Texas	4.50%	4.60%	555	-	555
3/29/2024	CDARS 1028340563	Bank of Texas	4.40%	4.40%	10,669	241	10,910
3/29/2024	CDARS 1028340504	Bank of Texas	5.15%	5.15%	24,965	578	25,543
1/1/2024	386166JC7	Grand Praire TX TXbl Ref	3.00%	1.60%	4,650	(3,381)	1,269
1/1/2024	442349EL6	Houston Tx Apt Sys Rev	1.27%	4.10%	6,360	3,587	9,947
1/15/2024	91282CEY3	US Treasury	3.00%	3.97%	15,000	(5,223)	9,777
1/15/2024	2487757W2	Denton Cnty TX	0.77%	4.11%	5,166	7,911	13,077
1/26/2024	3134H1K7	FHLMC	5.20%	4.98%	6,933	1,786	8,719
1/26/2024	3130AXAQ1	FHLB	5.70%	4.96%	48,925	(39,488)	9,437
1/27/2024	3134GYXS6	FHLMC	6.00%	6.00%	29,833	(25,833)	4,000
2/1/2024	79625GFC2	San Antonio Tx Elec & Gas TXBl	3.15%	3.15%	5,506	(2,753)	2,753
2/2/2024	91282CJT9	US Treasury	4.00%	4.16%	1,758	4,913	6,671
2/15/2024	237269JWO	Cypress-Fairbanks Tx Ind Sch	5.00%	3.52%	12,500	(7,977)	4,523
2/15/2024	811275HB5	Scurry Rosser TX ISD	3.00%	0.45%	3,075	(2,835)	240
2/15/2024	983064YX8	City of Wylie, TX GO	3.00%	0.25%	3,750	(3,584)	166
2/15/2024	9128CBM2	US Treasury Note B Class	0.13%	0.21%	625	(389)	236
2/15/2024	882806ES7	Texas St Tech Univ Rev	2.96%	3.86%	13,102	(4,657)	8,445
2/15/2024	3130AUZ56	FHLB	5.25%	4.75%	19,950	(15,611)	4,339
2/24/2024	3134GYH96	FHLMC	5.20%	5.20%	26,000	(12,712)	13,288
2/25/2024	3133ENPY0-A	FFCB	1.75%	1.76%	8,750	(4,347)	4,403
2/25/2024	3133ENPY0-B	FFCB	1.75%	1.92%	8,750	(3,964)	4,786
3/1/2024	876448DY4	Tarrant TX Reg WD	0.75%	4.00%	1,500	2,249	3,749
3/1/2024	87638QQW2	Tarrant Cnty Tx Cultural Hosp Rev	1.39%	4.12%	693	295	988
3/6/2024	3130AV3D22	FHLB	5.45%	5.45%	27,250	(17,259)	9,991
3/15/2024	4637778E5	Irving TX Table	1.47%	4.18%	4,395	1,547	5,942
3/16/2024	3136G43H4	FMNA	0.40%	0.44%	2,000	(892)	1,108
3/29/2024	3130ARCN9	FHLB	2.00%	2.00%	10,000	(5,000)	5,000
3/31/2024	1164753A0	Brownsville TXD USR	1.48%	5.45%	15,985	(6,291)	9,694
3/31/2024	3133EMVD1	FFCB	0.33%	0.33%	-	825	825
3/31/2024	3134AGX3UG	Freddie Mac	5.15%	5.15%	-	12,875	12,875
3/31/2024	3130ARPN5	FHLB	2.61%	2.61%	-	6,525	6,525
3/31/2024	88213ABW4	Texas ST A&M Univ R	2.83%	3.98%	-	1,127	1,127
3/31/2024	88213AKC8	Texas ST A&M Univ R	2.69%	4.29%	-	5,360	5,360
3/31/2024	3130APNE1	FHLB	0.90%	0.90%	-	2,250	2,250
3/31/2024	3130AMLM2	FHLB	0.38%	0.38%	-	469	469
3/31/2024	3130AMMJ8	FHLB	0.40%	0.40%	-	3,750	3,750
3/31/2024	3130AUBX1	FHLB	5.00%	5.00%	-	12,500	12,500
3/31/2024	3130B04R7	FHLB	4.65%	4.65%	-	5,037	5,037
3/31/2024	31424WFF4	FHLB	5.17%	5.17%	-	8,616	8,616
3/31/2024	5370962Z1	Little Elm TX ISD	0.00%	4.50%	-	3,964	3,964
					$ 435,068	**$ (75,791)**	**$ 359,277**

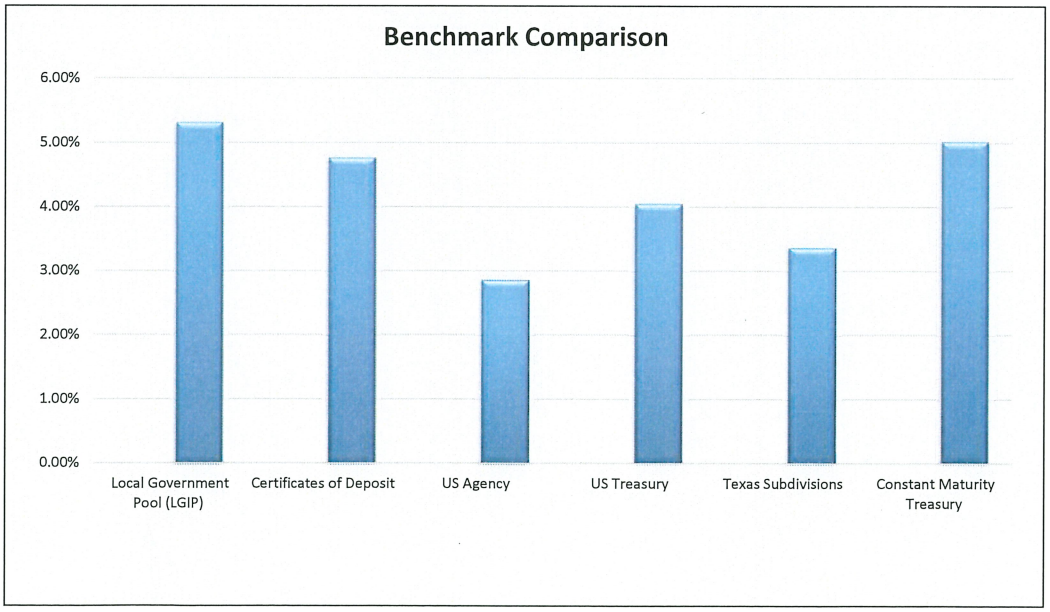

CITY OF SHERMAN, TEXAS
DEBT PROCEEDS PORTFOLIO SUMMARY
For the Quarter Ending March 31, 2024

Total Portfolio Summary

	Current Quarter 3/31/2024	Prior Quarter 12/31/2023	Change From Prior Quarter
Book Value	$ 80,895,641	$ 83,589,901	$ (2,694,260)
Market Value	$ 80,849,526	$ 83,524,331	$ (2,674,805)
Weighted Average Maturity - Days	99	55	44
Weighted Average Yield	5.18%	5.26%	-0.08%
Earned Income	$ 1,176,651	$ 1,136,224	$ 40,427
Earned Income - Year-to-Date	$ 2,312,875	$ 1,136,224	$ 1,176,651

This report complies with the requirements of the public funds investment law and covers all the funds of the City of Sherman that are subject to that law.

As of March 31, 2024, the City of Sherman's debt proceeds portfolio had a book value of about $80.9 million, which approximates the market value. Of this amount, $52 million was held in Local Government Investment Pools (LGIP) and $28.9 million was held in U.S. Agency Securities.

The portfolio value decreased by $2.6 million from the previous quarter due to draws for project payments.

The weighted average yield on the portfolio was 5.18%, 31 basis points below the 4-week Constant Maturity Treasury Index of 5.49%, and 8 basis points below the previous quarter.

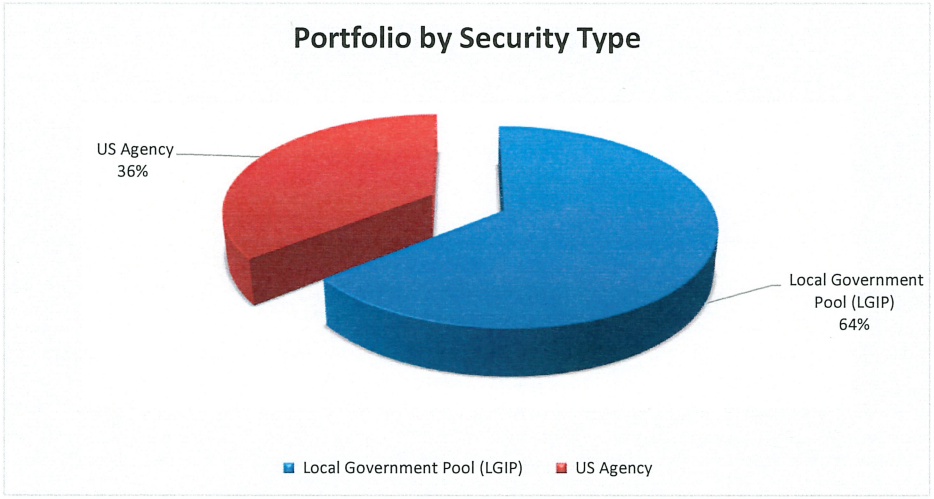

Mary Lawrence, Chief Financial Officer and City of Sherman Investment Officer

Jana Walker, Controller and City of Sherman Investment Officer

Sherman
CLASSIC TOWN. BROAD HORIZON.

CITY OF SHERMAN, TX
Investments Outstanding
AS of 3/31/2024

Name/CUSIP	Debt Issuance	Settlement Date	Security Type	Security Description	Maturity Date	Par Value	Purchase Price	Original Cost	Book Value	Market Price	Market Value	Days to Maturity	YTM
TexPool	2023 Certificates of Obligation		LGIP	TexPool	4/1/2024	48,060,494	100.00	48,060,494	48,060,494	100.00	48,060,494	1	5.33%
TexPool	2024 Tax Notes		LGIP	TexPool	4/1/2024	3,965,899	100.00	3,965,899	3,965,899	100.00	3,965,899	1	5.33%
31300AMZQ8	2021 Certificates of Obligation	06/30/21	US Agency-Callable	FHLB	8/30/2024	1,000,000	100.00	1,000,000	1,000,000	97.98	979,808	152	0.51%
3130AMHGO	2021 Certificates of Obligation	05/27/21	US Agency-Callable	FHLB	11/26/2024	1,000,000	100.00	1,000,000	1,000,000	96.98	969,806	240	0.48%
3130AXYF9	2023 Certificates of Obligation	12/06/23	US Agency-Callable	FHLB	6/6/2025	7,500,000	100.00	7,500,000	7,500,000	99.97	7,497,464	432	5.45%
313385ACO	2023 Certificates of Obligation	02/23/24	US Agency	FHLB	1/3/2025	10,000,000	95.73	9,573,438	9,622,974	96.22	9,622,211	278	5.12%
313384G60	2023 Certificates of Obligation	02/14/24	US Agency	FHDN	9/20/2024	10,000,000	96.96	9,695,529	9,746,274	97.54	9,753,844	173	5.22%
Total						**$ 81,526,393**		**$80,795,360**	**$ 80,895,641**		**$ 80,849,526**		

Sherman
CLASSIC TOWN. BROAD HORIZON.

CITY OF SHERMAN, TX
Market Value Summary
AS of 3/31/2024

CUSIP	Security Type / Description	Maturity Date	Market Value 12/31/2023	Change in Market Value	Market Value 3/31/2024
TexPool 2021 CO	LGIP		5,227,314	(5,227,314)	-
TexPool 2023 CO	LGIP		68,861,332	(20,800,838)	48,060,494
TexPool 2024 Tax Notes	LGIP		-	3,965,899	3,965,899
Landing Rock 2017 CO	Ins Inv		1,255	(1,255)	-
31300AMZQ8-FHLB 2021 CO	US Agency-Callable	8/30/2024	970,548	9,260	979,808
3130AMHGO-FHLB 2021 CO	US Agency-Callable	11/26/2024	959,907	9,899	969,806
3130AXYF9-FHLB 2023 CO	US Agency-Callable	6/6/2025	7,503,975	(6,511)	7,497,464
313385ACO-FHLB 2023 CO	US Agency	1/3/2025	-	9,622,211	9,622,211
313384G60-FHDN 2023 CO	US Agency	9/20/2024	-	9,753,844	9,753,844
Total			**$ 83,524,331**	**$ (2,674,805)**	**$ 80,849,526**

Sherman
CLASSIC TOWN. BROAD HORIZON.

CITY OF SHERMAN, TX
Investment Transaction Report
AS of 3/31/2024

Settle Date	Name	Security Description	Coupon	Maturity Date	Par Value	Price	Principal Amount	Interest Purchased/ Received	Total Amount	YTM
Project Payments/Draws										
1/8/2024	TexPool 2021 CO	LGIP			1,292,696		1,292,696	-	1,292,696	
1/26/2024	TexPool 2021 CO	LGIP			849,194		849,194	-	849,194	
2/27/2024	TexPool 2021 CO	LGIP			211,932		211,932	-	211,932	
3/25/2024	TexPool 2021 CO	LGIP			2,905,194		2,905,194	-	2,905,194	
1/26/2024	TexPool 2023 CO	LGIP			467,192		467,192	-	467,192	
2/13/2024	TexPool 2023 CO	LGIP			9,695,529		9,695,529	-	9,695,529	
2/23/2024	TexPool 2023 CO	LGIP			9,573,438		9,573,438	-	9,573,438	
2/27/2024	TexPool 2023 CO	LGIP			1,015,828		1,015,828	-	1,015,828	
3/25/2024	TexPool 2023 CO	LGIP			827,457		827,457	-	827,457	
Deposits/Purchases										
1/24/2024	TexPool 2024 Tax Notes	LGIP			3,926,838		3,926,838	-	3,926,838	
2/14/2024	313384G60-FHDN 2023 CO	FHDN	0.00%	9/20/2024	10,000,000	96.96	9,695,529	-	9,695,529	5.22%
2/23/2024	313385ACO-FHLB 2023 CO	FHLB	0.00%	1/3/2025	10,000,000	95.73	9,573,438	-	9,573,438	5.12%
Income Payments										
1/3/2024	31300AMZQ8	FHLB	0.51%					$ 2,550	2,550	0.51%
1/31/2024	Texpool 2024 Tax Notes	LGIP	5.35%					4,602	4,602	5.35%
1/31/2024	TexPool 2021 CO	LGIP	5.35%					18,632	18,632	5.35%
1/31/2024	TexPool 2023 CO	LGIP	5.35%					312,218	312,218	5.35%
2/29/2024	TexPool 2021 CO	LGIP	5.33%					13,071	13,071	5.33%
2/29/2024	TexPool 2023 CO	LGIP	5.33%					257,484	257,484	5.33%
2/29/2024	Texpool 2024 Tax Notes	LGIP	5.33%					16,633	16,633	5.33%
3/31/2024	TexPool 2021 CO	LGIP	5.32%					10,147	10,147	5.32%
3/31/2024	TexPool 2023 CO	LGIP	5.32%					219,052	219,052	5.32%
3/31/2024	Texpool 2024 Tax Notes	LGIP	5.32%					17,826	17,826	5.32%
Total								**$ 872,215**		

Sherman
CLASSIC TOWN. BROAD HORIZON.

CITY OF SHERMAN, TX
Comparison by Type
AS of 3/31/2024

Cash / Investment Type	Balance 6/30/2023	Balance 9/30/2023	Balance 12/31/2023	Balance 3/31/2024	Percent of Portfolio	Portfolio Cap
Local Government Pool (LGIP)	$ 1,927,074	$ 84,063,016	$ 74,088,646	$ 52,026,393	64.31%	100.00%
FDIC Insured Investment (Ins Inv)	7,659,392	908,670	1,255	-	0.00%	100.00%
US Agency	2,000,000	2,000,000	9,500,000	28,869,248	35.69%	100.00%
Total	**$ 11,586,466**	**$ 86,971,686**	**$ 83,589,901**	**$ 80,895,641**	**100.00%**	

Sherman
CLASSIC TOWN. BROAD HORIZON.

CITY OF SHERMAN, TX
Portfolio by Maturity
AS of 3/31/2024

Maturity Time Frame	Balance 6/30/2023	Balance 9/30/2023	Balance 12/31/2023	Balance 3/31/2024	Percent of Portfolio	Maximum Allowable
Within 1 month	$ 9,586,466	$ 84,971,686	$ 74,089,901	$ 52,026,393	64.3%	100%
2 months - 1 year	-	-	2,000,000	$ 21,369,248	26.4%	
1 year - 2 years	2,000,000	2,000,000	7,500,000	$ 7,500,000	9.3%	
2 years - 3 years	-	-	-	-	0.0%	
3 years - 4 years	-	-	-	-	0.0%	
	$ 11,586,466	**$ 86,971,686**	**$ 83,589,901**	**$ 80,895,641**		

Liquidity Indicator				
Weighted Average Maturity	**82.13**	**9.69**	**54.68**	**99.45**

Sherman
CLASSIC TOWN. BROAD HORIZON.

CITY OF SHERMAN, TX
Earned Income
AS of 3/31/2024

Date Received/ Purchased	Name	Security Description	Coupon	YTM	Interest Purchased/ Received	Accrued Interest/ Amortization	Income Earned
1/31/2024	TexPool 2021 CO	LGIP		5.35%	$ 18,632	-	18,632
1/31/2024	Texpool 2023 CO	LGIP		5.35%	$ 312,218	-	312,218
1/31/2024	TexPool 2024 Tax Notes	LGIP		5.35%	$ 4,602	-	4,602
2/29/2024	TexPool 2021 CO	LGIP		5.33%	$ 13,071	-	13,071
2/29/2024	Texpool 2023 CO	LGIP		5.33%	$ 257,484	-	257,484
2/29/2024	TexPool 2024 Tax Notes	LGIP		5.33%	$ 16,633	-	16,633
3/31/2024	TexPool 2021 CO	LGIP		5.32%	$ 10,147	-	10,147
3/31/2024	TexPool 2024 Tax Notes	LGIP		5.32%	$ 17,826	-	17,826
3/31/2024	Texpool 2023 CO	LGIP		5.32%	$ 219,052	-	219,052
3/31/2024	3130AMHGO-FHLB 2021 CO	US Agency-Callable		0.48%	$ -	1,187	1,187
3/31/2024	31300AMZQ8-FHLB 2021 CO	US Agency-Callable		0.51%	$ 2,550	(1,275)	1,275
3/31/2024	3130AXYF9-FHLB 2023 CO	US Agency-Callable		5.45%	$ -	102,187	102,187
3/31/2024	313384G60-FHDN 2023 CO	US Agency		5.22%	$ -	104,051	104,051
3/31/2024	313385ACO-FHLB 2023 CO	US Agency		5.12%	$ -	98,286	98,286
					$ 872,215	**$ 304,436**	**$ 1,176,651**

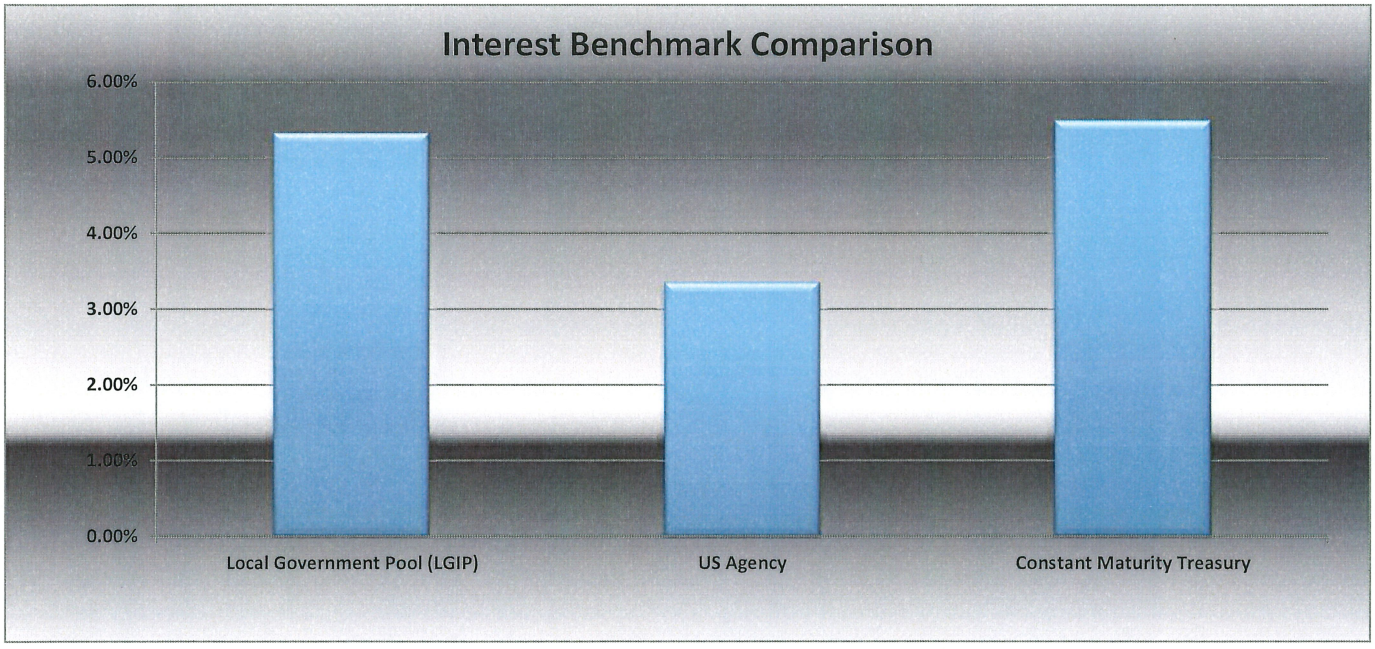

2024
Council Calendar

January						
Su	Mo	Tu	We	Th	Fr	Sa
	1	2	3	4	5	6
7	8	9	10	11	12	13
14	15	16	17	18	19	20
21	22	23	24	25	26	27
28	29	30	31			

February						
Su	Mo	Tu	We	Th	Fr	Sa
				1	2	3
4	5	6	8	8	9	10
12	13	13	14	15	16	17
18	19	20	22	22	23	24
25	26	27	28	29		

March						
Su	Mo	Tu	We	Th	Fr	Sa
					1	2
3	4	5	6	7	8	9
10	11	12	13	14	15	16
17	18	19	20	21	22	23
24	25	26	27	28	29	30
31						

April						
Su	Mo	Tu	We	Th	Fr	Sa
	1	2	3	4	5	6
7	8	9	10	11	12	13
14	15	16	17	18	19	20
21	22	23	24	25	26	27
28	29	30				

May						
Su	Mo	Tu	We	Th	Fr	Sa
			1	2	3	4
5	6	7	8	9	10	11
12	13	14	15	16	17	18
19	20	21	22	23	24	25
26	27	28	29	30	31	

June						
Su	Mo	Tu	We	Th	Fr	Sa
						1
2	3	6	7	6	7	8
9	10	11	12	13	14	15
16	17	18	19	~~20~~	~~21~~	22
23	24	25	26	27	28	29
30						

July						
Su	Mo	Tu	We	Th	Fr	Sa
	1	2	3	4	5	6
7	8	9	10	11	12	13
14	15	16	17	18	19	20
21	22	23	24	25	26	27
28	29	30	31			

August						
Su	Mo	Tu	We	Th	Fr	Sa
				1	2	3
4	5	6	7	8	9	10
11	12	13	14	15	16	17
18	19	20	21	22	23	24
25	26	27	28	29	30	31

September						
Su	Mo	Tu	We	Th	Fr	Sa
1	2	3	4	5	6	7
8	9	10	11	12	13	14
15	16	17	18	19	20	21
22	23	24	25	26	27	28
29	30					

October						
Su	Mo	Tu	We	Th	Fr	Sa
		1	2	3	4	5
6	7	8	9	10	11	12
13	14	15	16	17	18	19
20	21	22	23	24	25	26
27	28	29	30	31		

November						
Su	Mo	Tu	We	Th	Fr	Sa
					1	2
3	4	5	6	7	8	9
10	11	12	13	14	15	16
17	18	19	20	21	22	23
24	25	26	27	28	29	30

December						
Su	Mo	Tu	We	Th	Fr	Sa
1	2	3	4	5	6	7
8	9	10	11	12	13	14
15	16	17	18	19	20	21
22	23	24	25	26	27	28
29	30	31				

	Holiday
	Holiday for Firefighters/Police Only
	City Council Regular Meeting
	Special Called Meeting
	Budget Workshop
	Cancelled City Council Meeting

CALLED MEETINGS	
4/19/2024	Budget Planning Meeting
5/23/2024	CIP Work Session
~~6/20/2024~~	Budget Workshop Day 1
~~6/21/2024~~	Budget Workshop Day 2